Computer Desk

User Manual

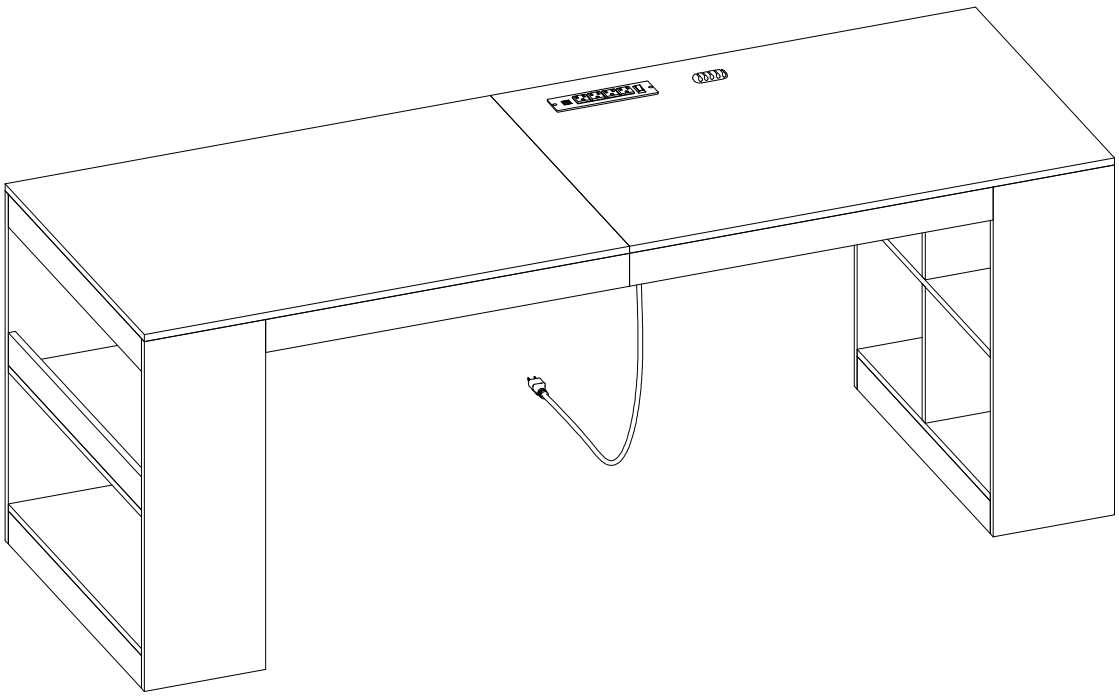

AJ-DJ504952

Version : 1.0

General Guidelines

- Please read the following instruction carefully and use the product accordingly.
- Please keep this manual and hand it over when you transfer the product.
- This summary may not include every detail of all variations and considered steps.
- Please contact us when further information and help are needed.

Notes

- The product is intended for indoor use only. The product must be assembled and used in accordance with the provisions of the manual. Personal injury and/or damage to product may occur if products are used outside of their intended purposes and/or if products have been changed/modified from their original design. The seller does not assume any responsibility or liability with respect to any injury/damage caused by incorrect assembly or improper use.
- Avoid long-term exposure to humid environments to prevent mildew.
- Keep the product away from fire sources and high temperatures. Do not expose the product to direct sunlight.
- Do not place any hot objects on the surface of the product.
- If there are any defective or missing parts after unpacking, please cease assembly immediately and contact us.
- Please assemble the item on a spacious surface and do not place the unwrapped product directly on the ground to avoid product damage.
- Please do not stand or sit on the wooden boards.
- Please wear gloves during the assembly and/or disassembly process to avoid scratches from any sharp edges.
- Please match the corresponding part and fitting based on the part number in the manual.
- If the part does not match with the fitting, please check the piece as specified in this manual.
- During assembly, first loosely align all screws with the corresponding pre-drilled holes and then tighten the screws one by one.
- Periodically inspect screw tightness while the product is in use. If necessary, retighten to ensure structural integrity.
- If you accidentally spill water or another liquid on the surface, immediately wipe clean with a dry towel.
- Please keep the product away from sharp, pointed objects and corrosive substances to prevent product damage.
- Please place this item on level, solid ground during use.

Warnings

- Children are not allowed to assemble the product. During assembly, keep all small parts out of the reach of children as they may be fatal if swallowed or inhaled.
- Children are forbidden to climb or play on the product to avoid serious bodily injury caused by the toppling.
- Keep plastic packing bags out of reach of children to avoid any potential danger, such as suffocation.
- The product should be attached to the wall with the included anti-tipping kit to prevent personal injury caused by accidentally tipping over.

Tips-contact us

- If there is any damage after unpacking or you have any questions during assembly, please feel free to contact us at your earliest convenience. Our customer care team provides professional returns or exchanges as well as assembly guidance.

Disassembly Diagram

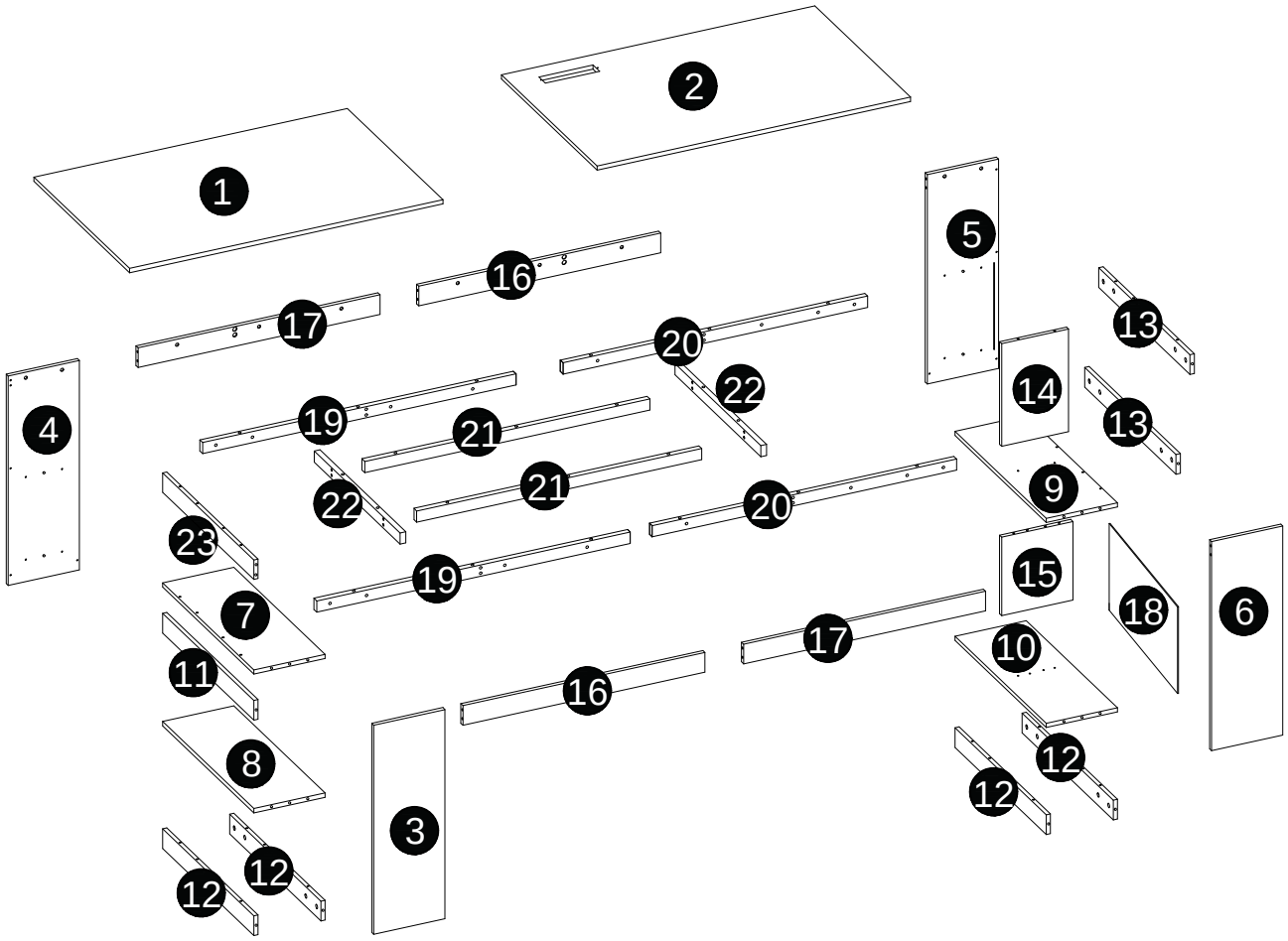

Parts List

1

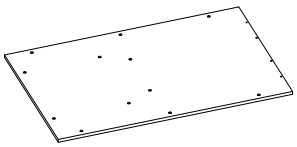

×1

2

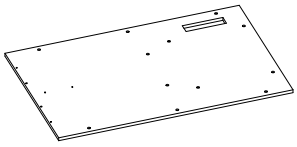

×1

3

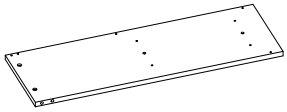

×1

4

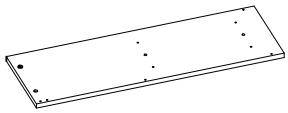

×1

5

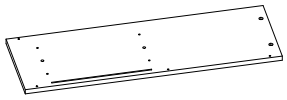

×1

6

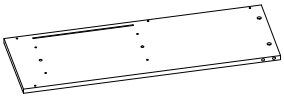

×1

7

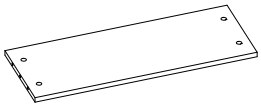

×1

8

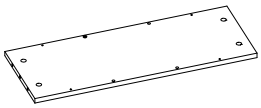

×1

9

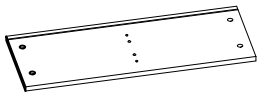

×1

10

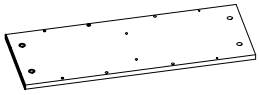

×1

11



×1

12



×4

13

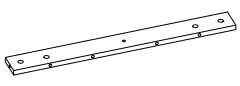

×2

14



×1

15

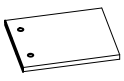

×1

16

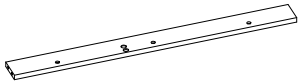

×2

Parts List

17

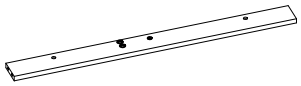

×2

18

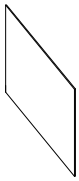

×1

19

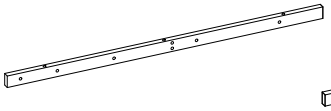

×2

20

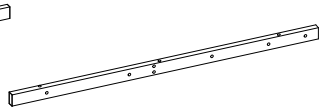

×2

21

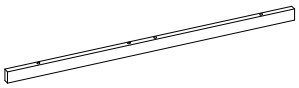

×2

22



×2

23



×1

Components Sheet

A



M6*12
×13

B



M6*30
×21

C

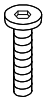

M6*40
×17

D



M6*50
×25

E

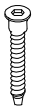

M7*40
×4

F



M8*50
×49

G



×58

H



M3.5*12
×3

I

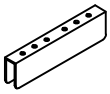

×2

J

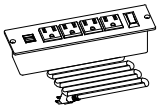

×1

K

×1

L



×4

M



×6

N



M3.5*14
×7

O



×6

P

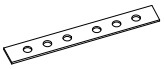

×2

Q

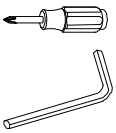

×1

Required

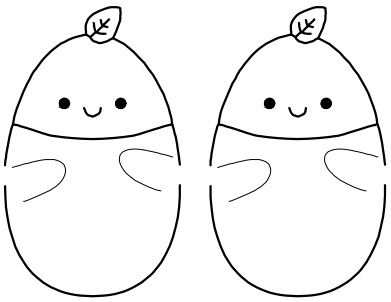

Two People

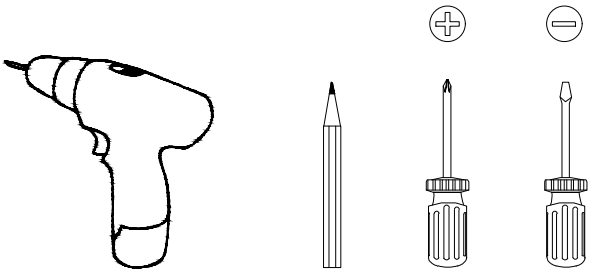

Cam Lock Fastening System

Insert the cam bolt into the hole first,then nsert the cam lock and lock it.

1

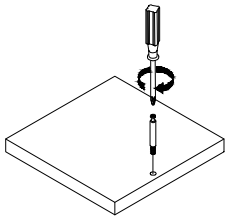

2

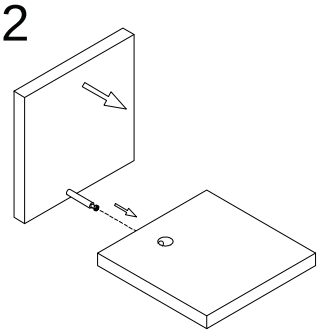

3

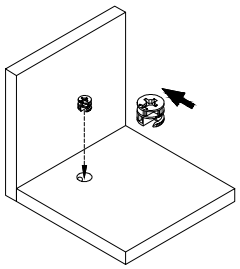

The opening must point toward the edge of the board

4

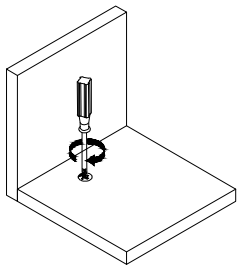

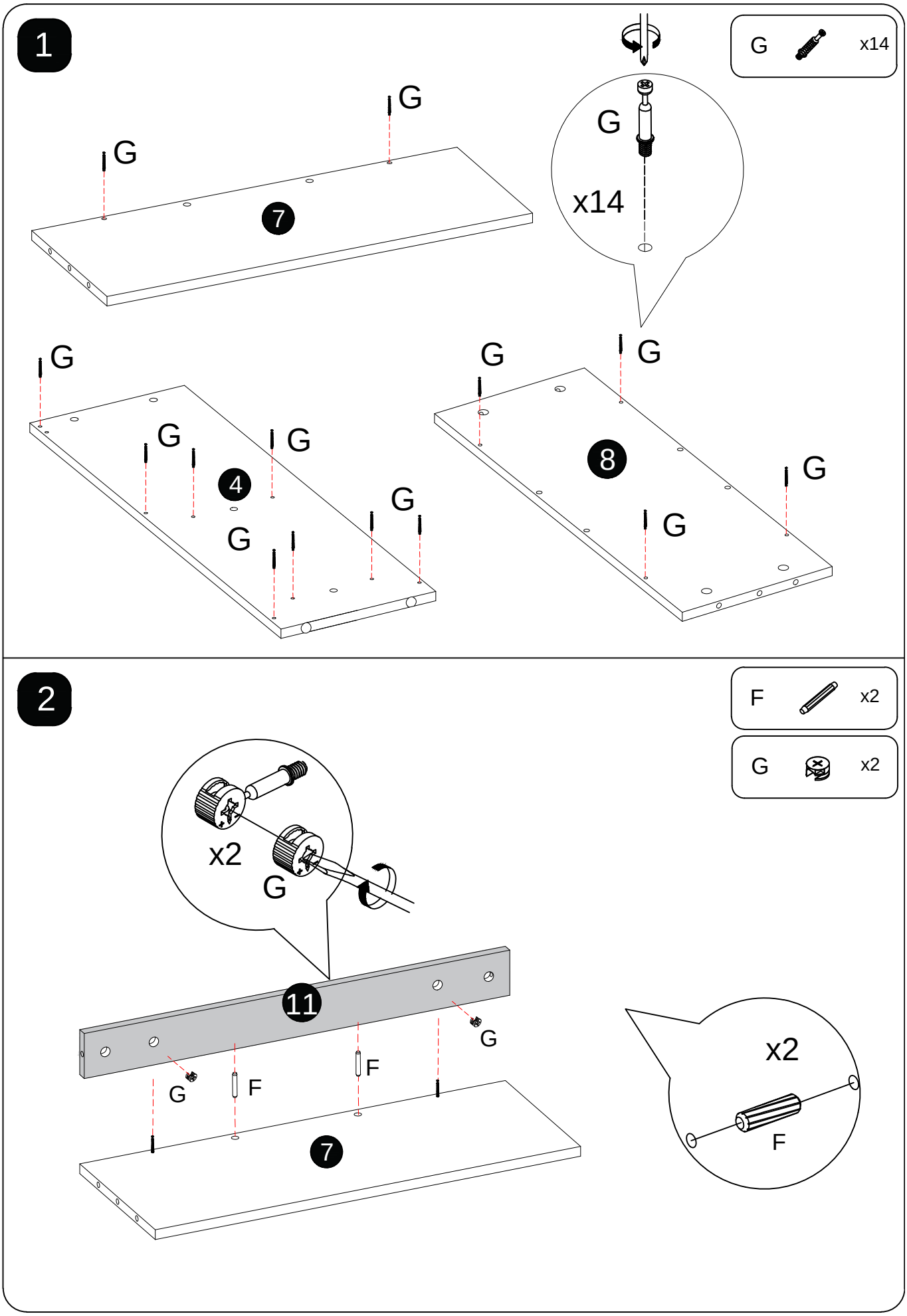
1
G x14
G
G
7
G
x14
G
G
G
G
4
G
G
G
G
G
8
G
G
2
F x2
G x2
x2
G
11
G
F
F
G
7
x2
F

3

G x4

F x4

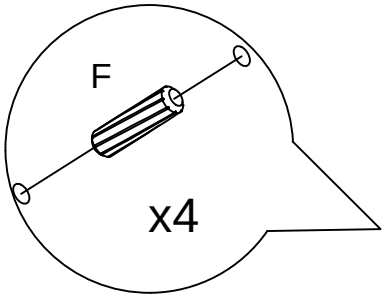

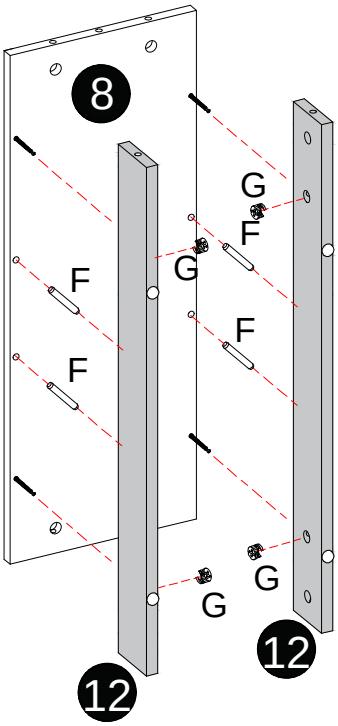

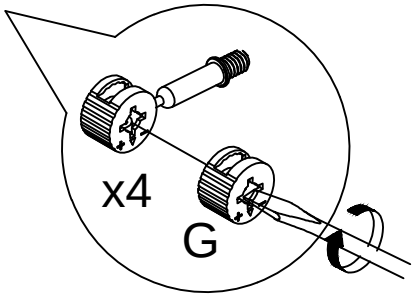

4

F x3

G x8

Pay attention to the direction of No. 23

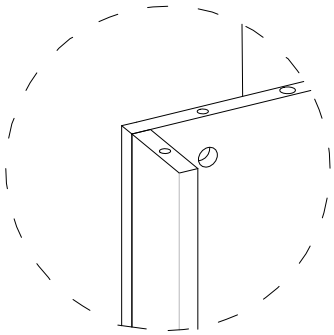

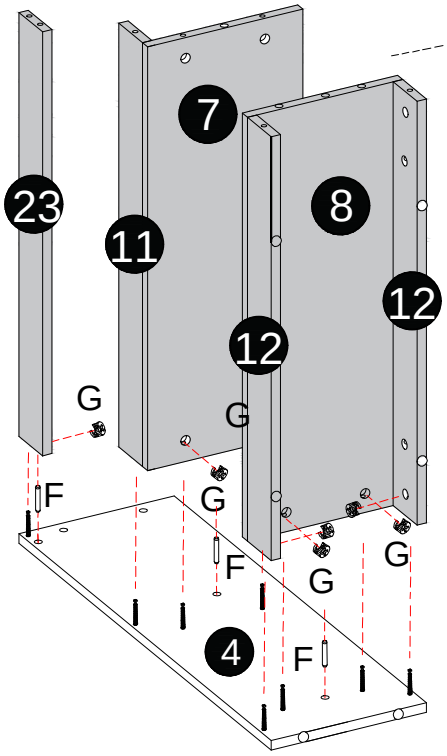

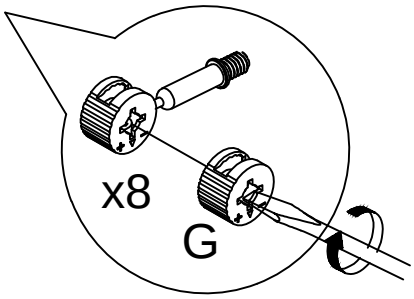

5

G x8

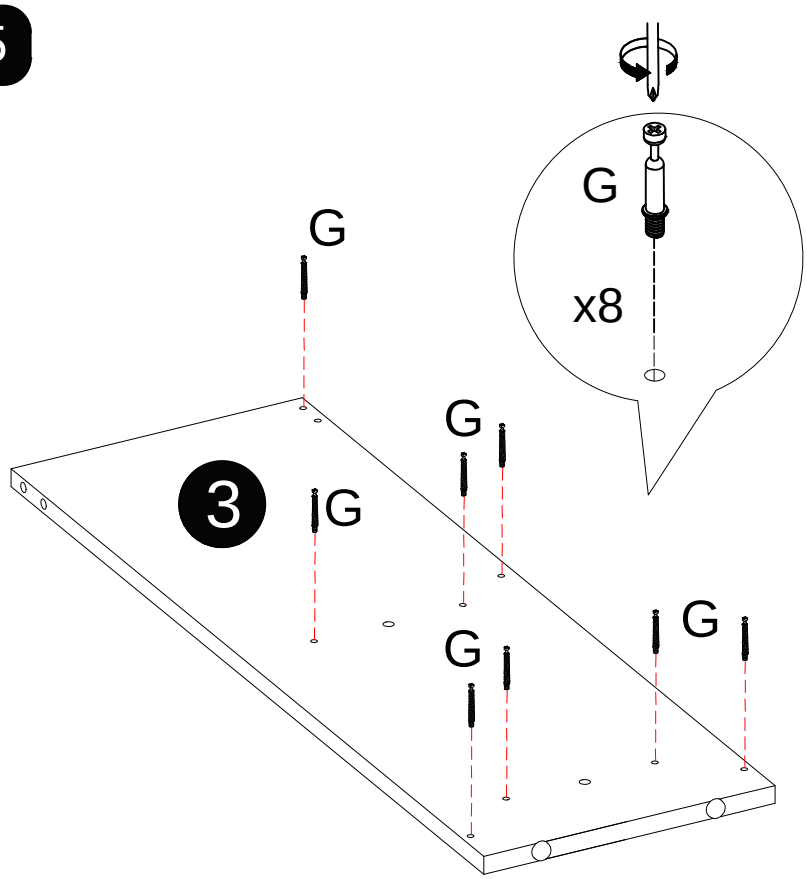

6

F x2

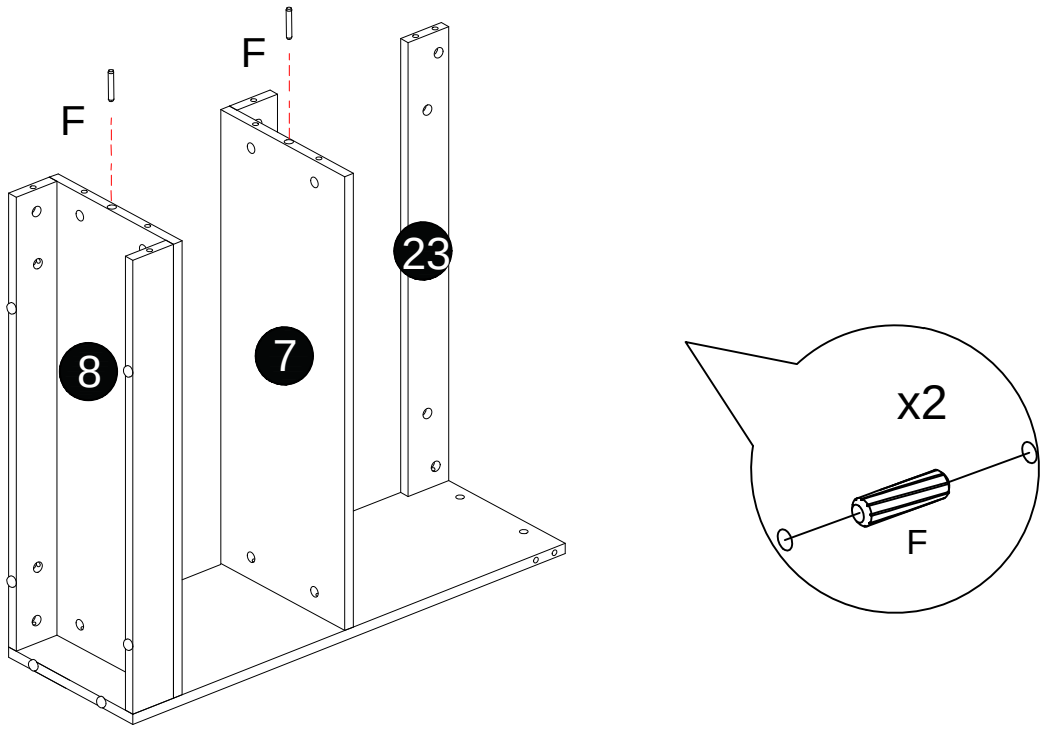

7

G x8

F x1

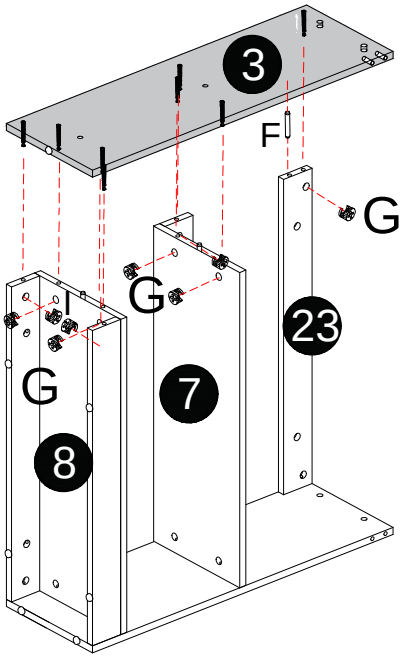

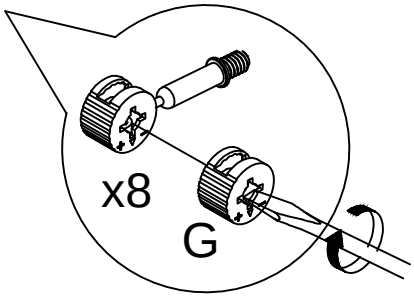

8

G x6

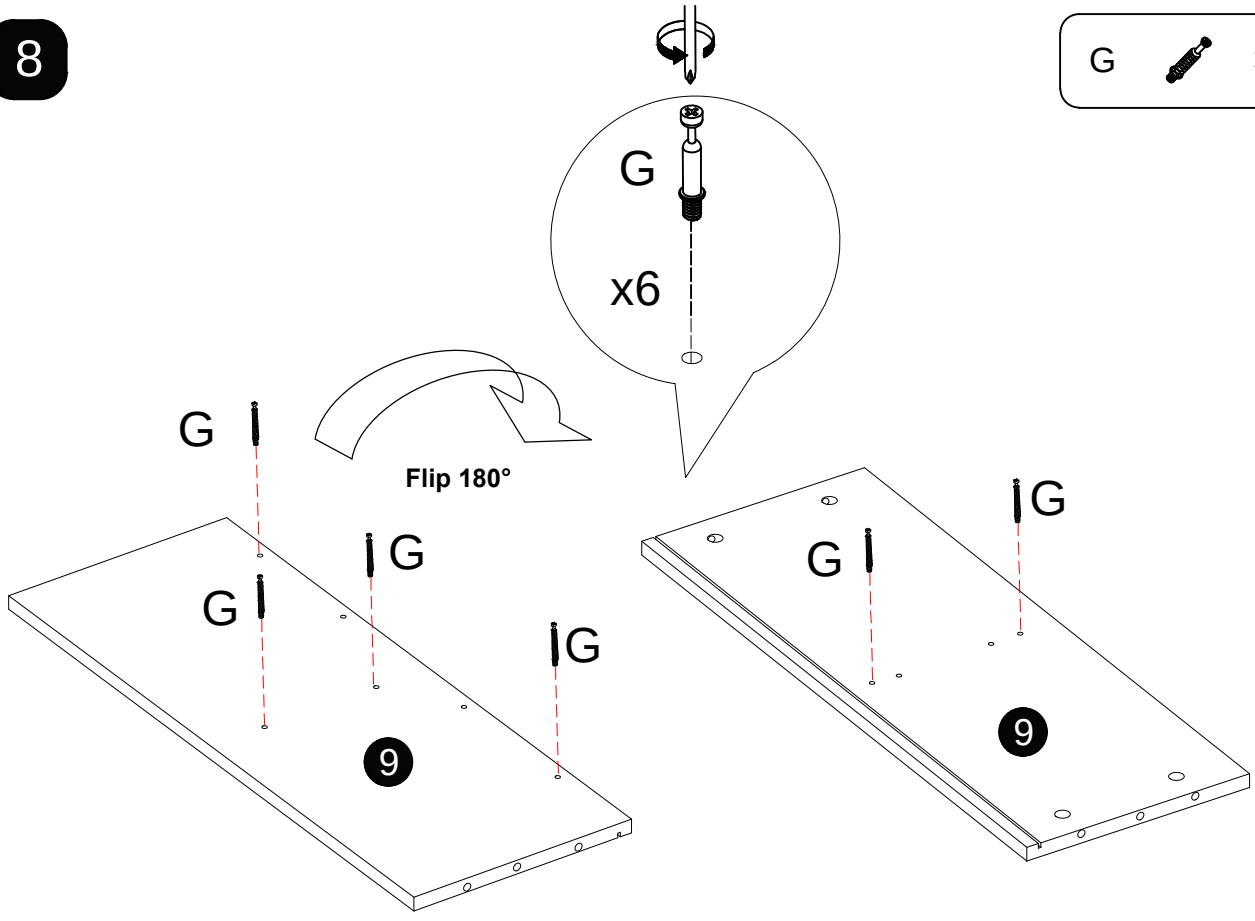

9

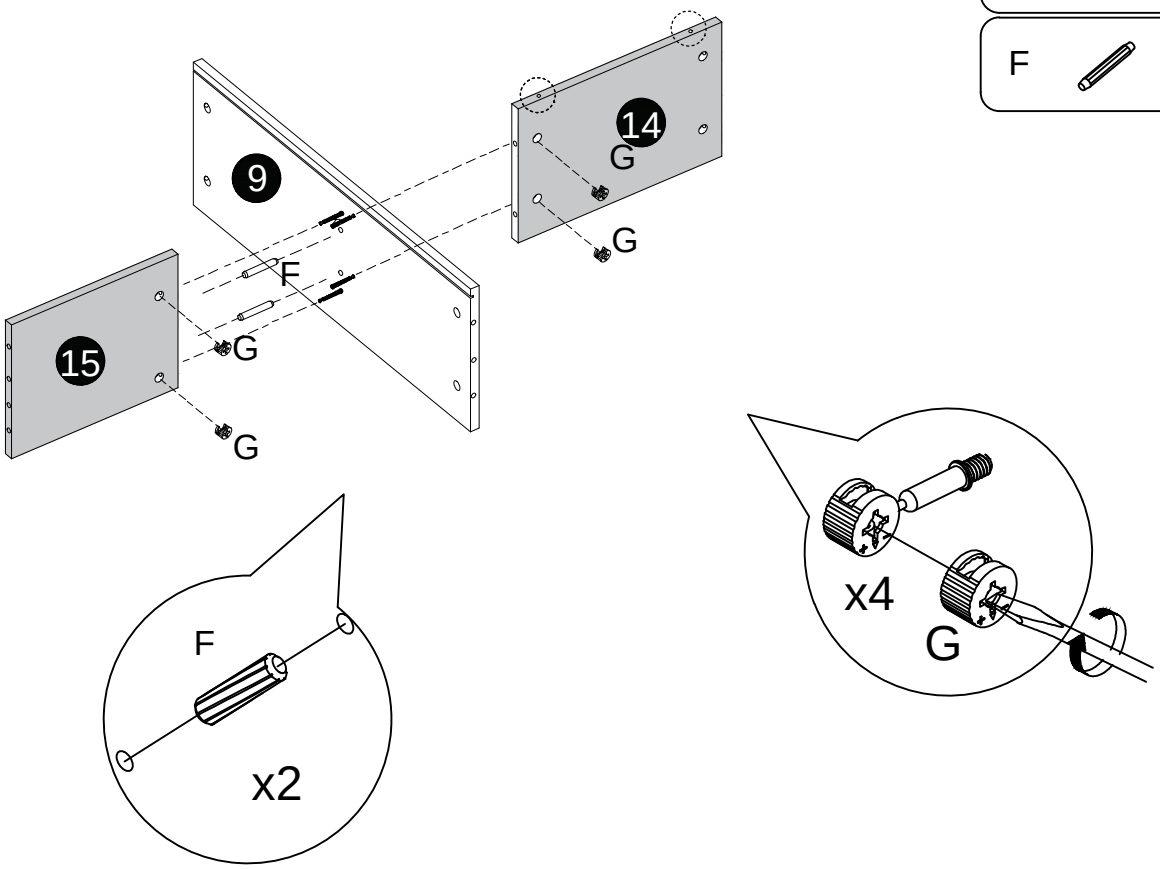

10

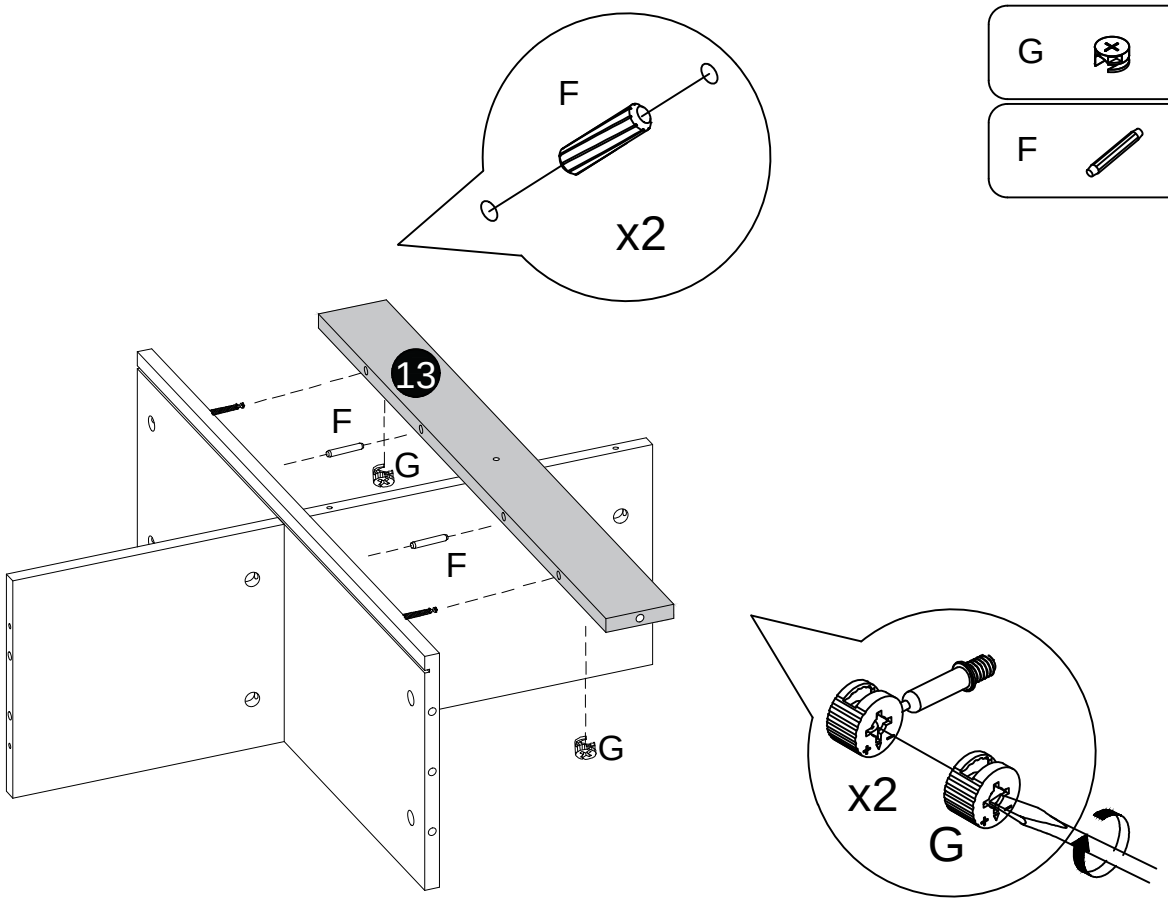

11

G x4

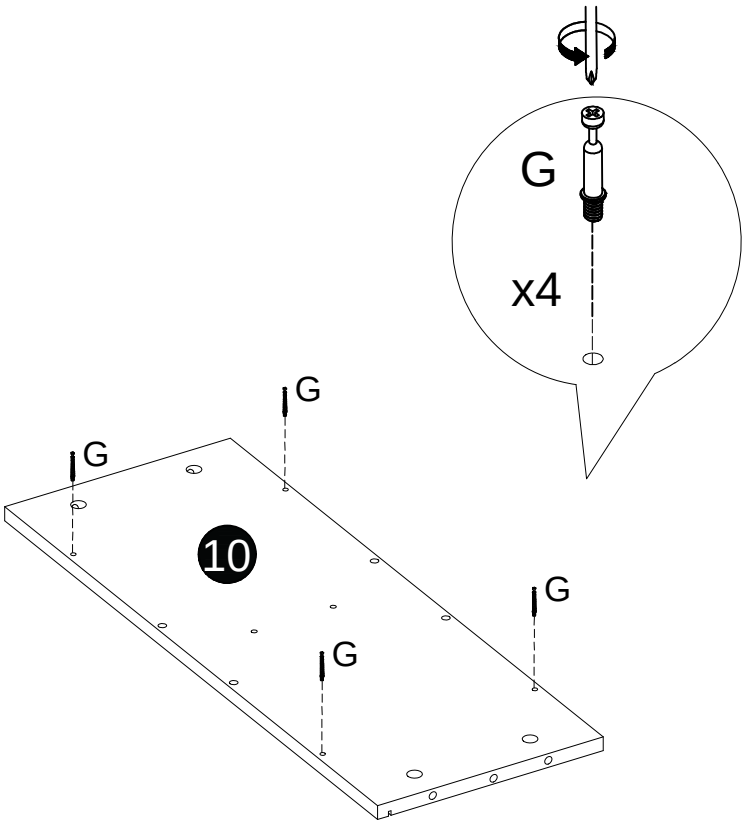

12

G x4

F x4

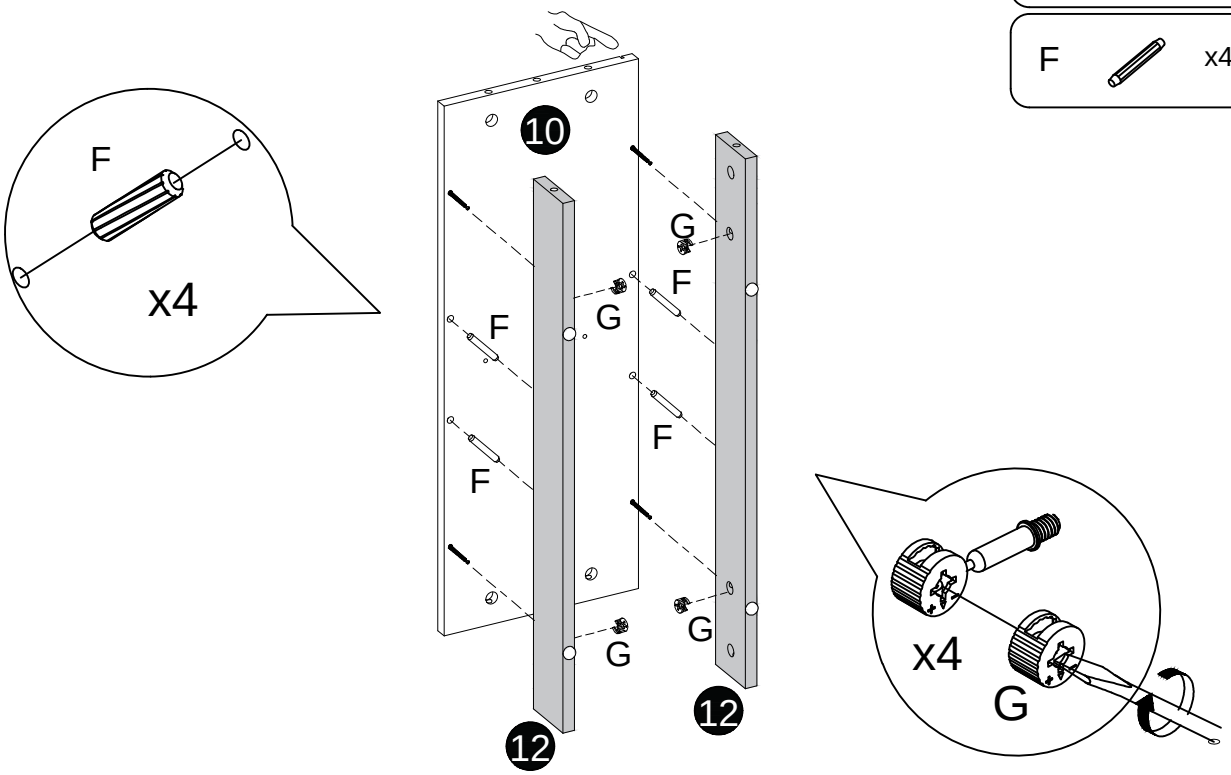

13

G x8

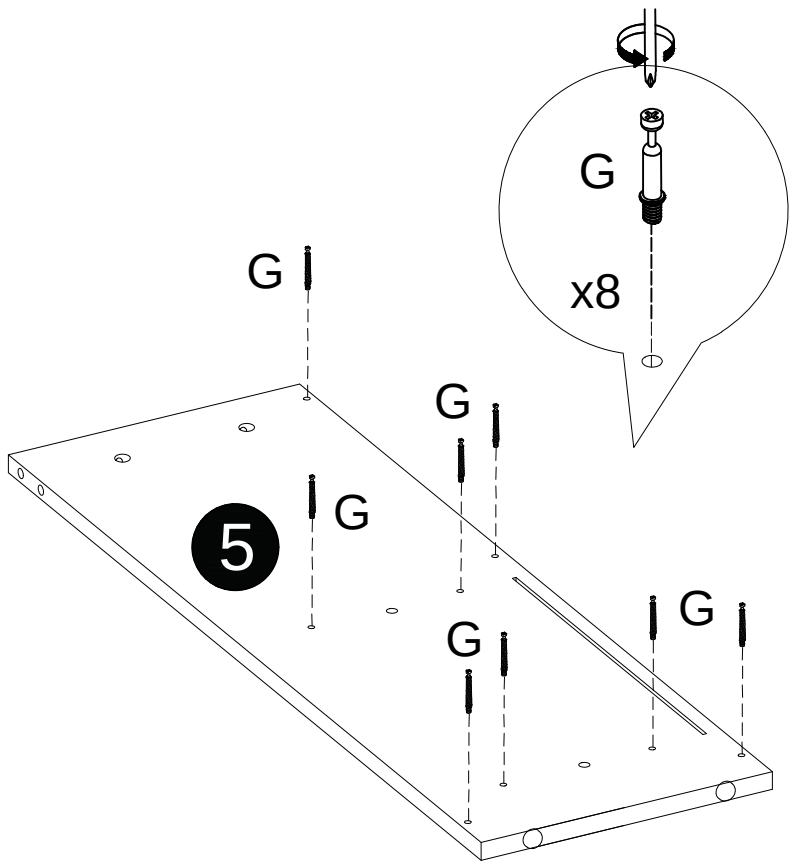

14

G x4

F x1

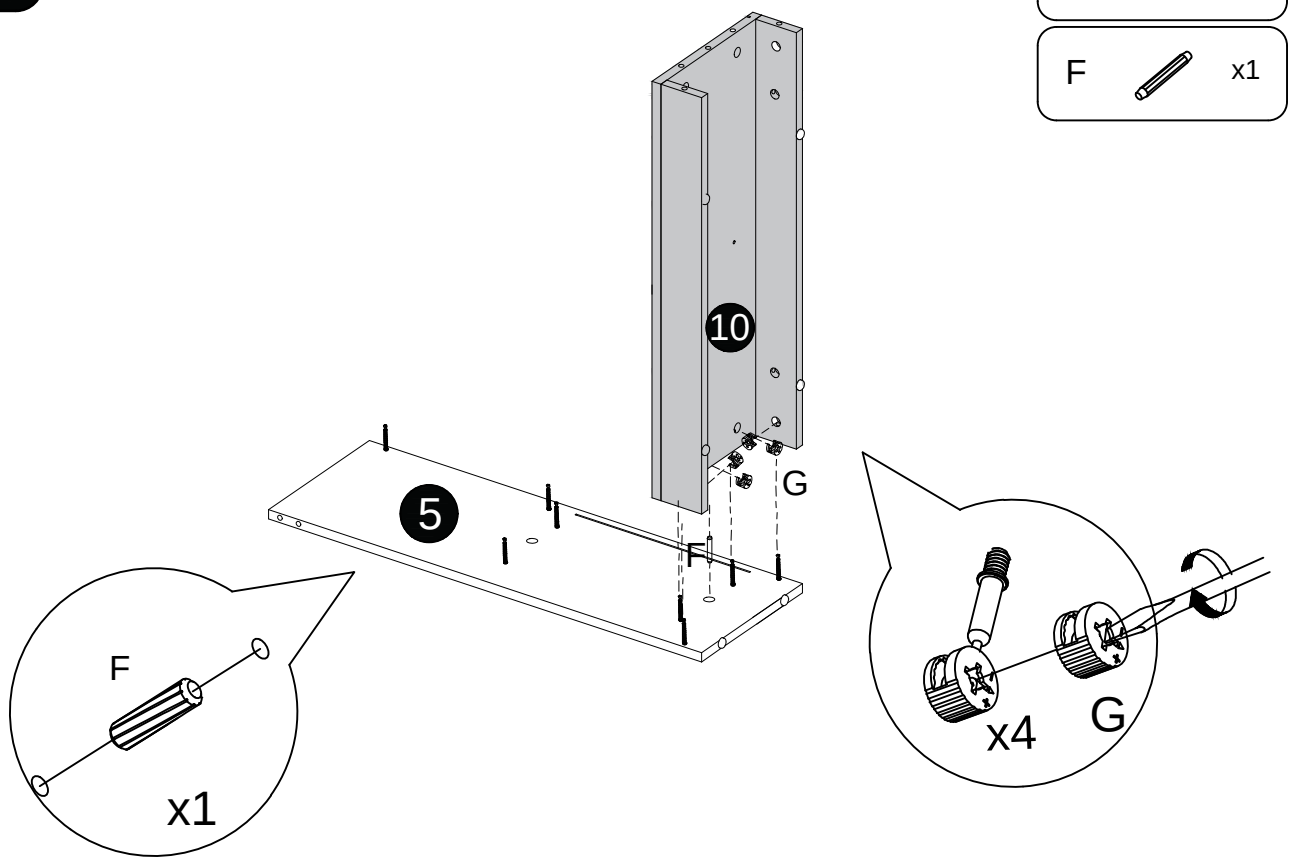

15

G x3

F x1

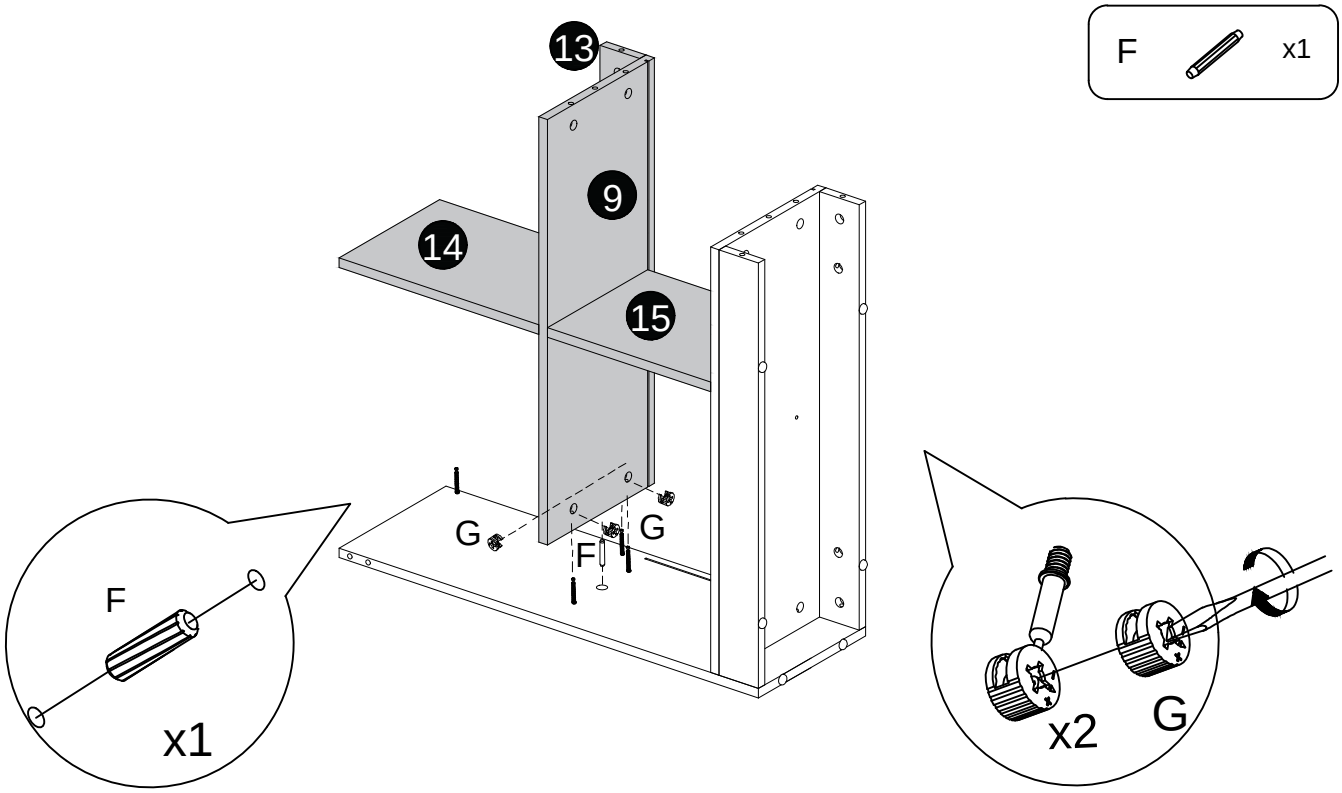

16

G x1

Pay attention to the direction of No. 13

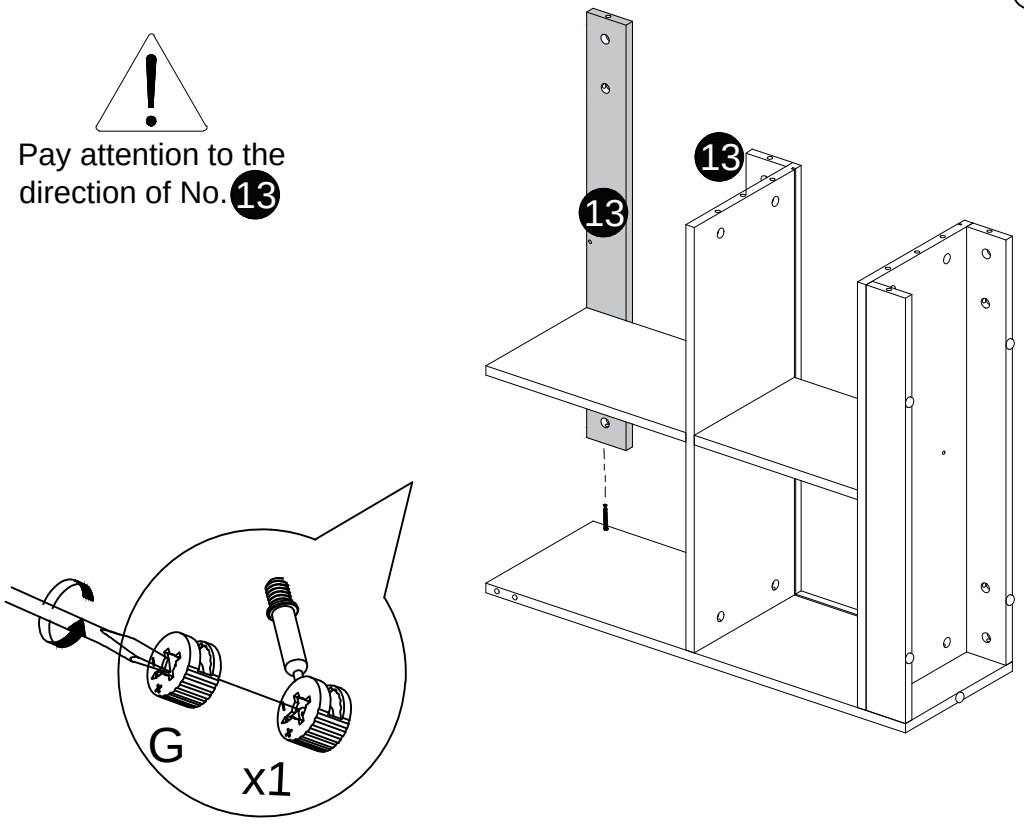

17

E x4

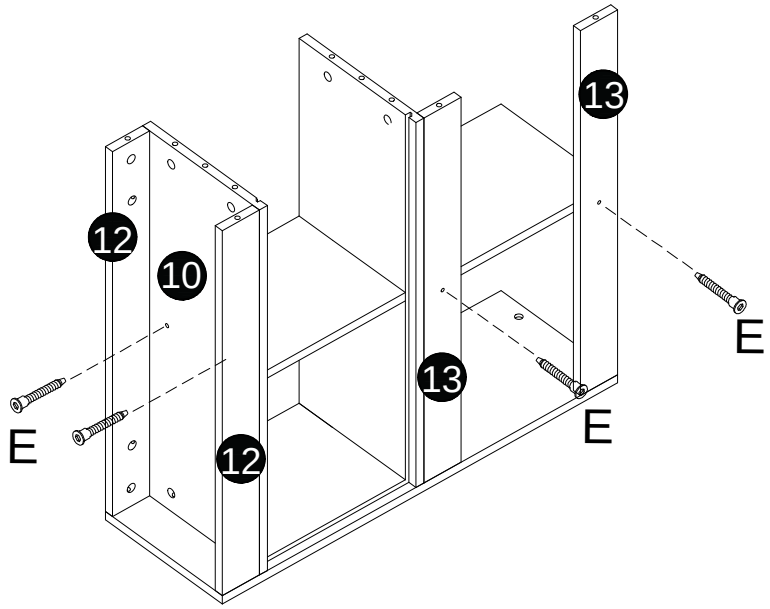

18

F x2

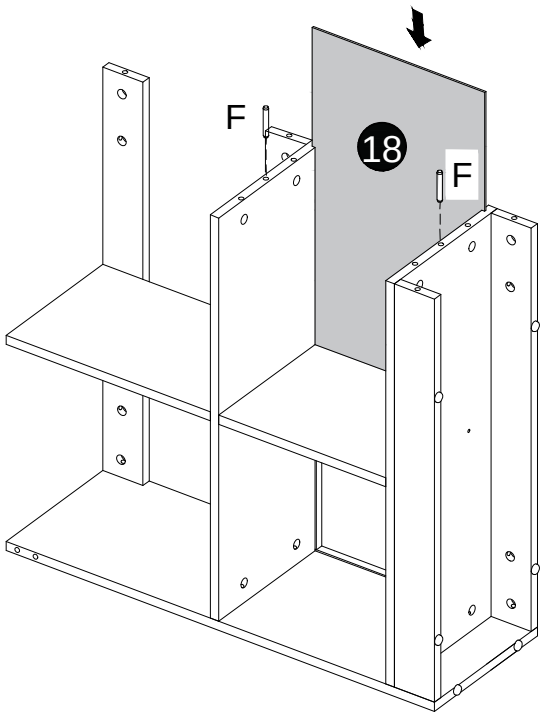

19

G x8

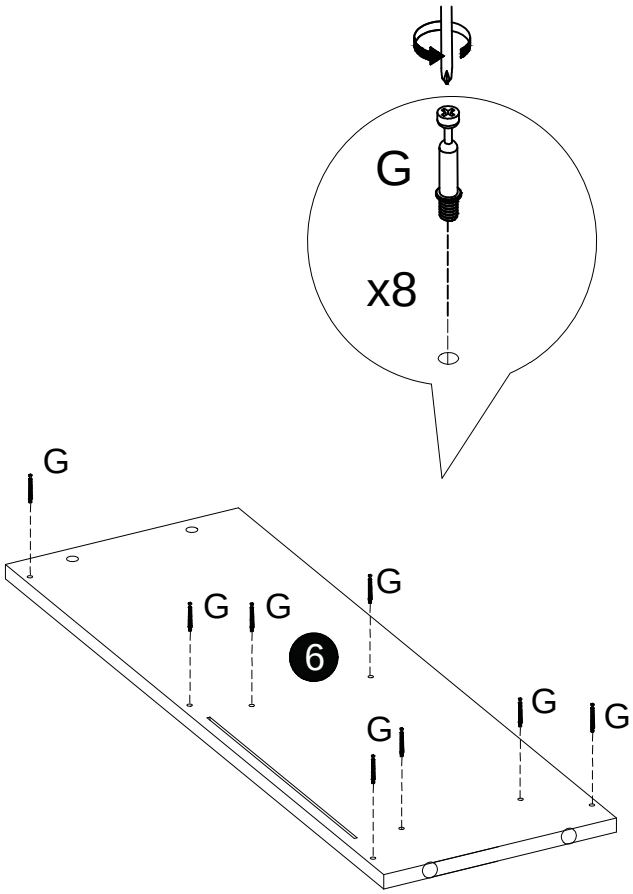

20

G x8

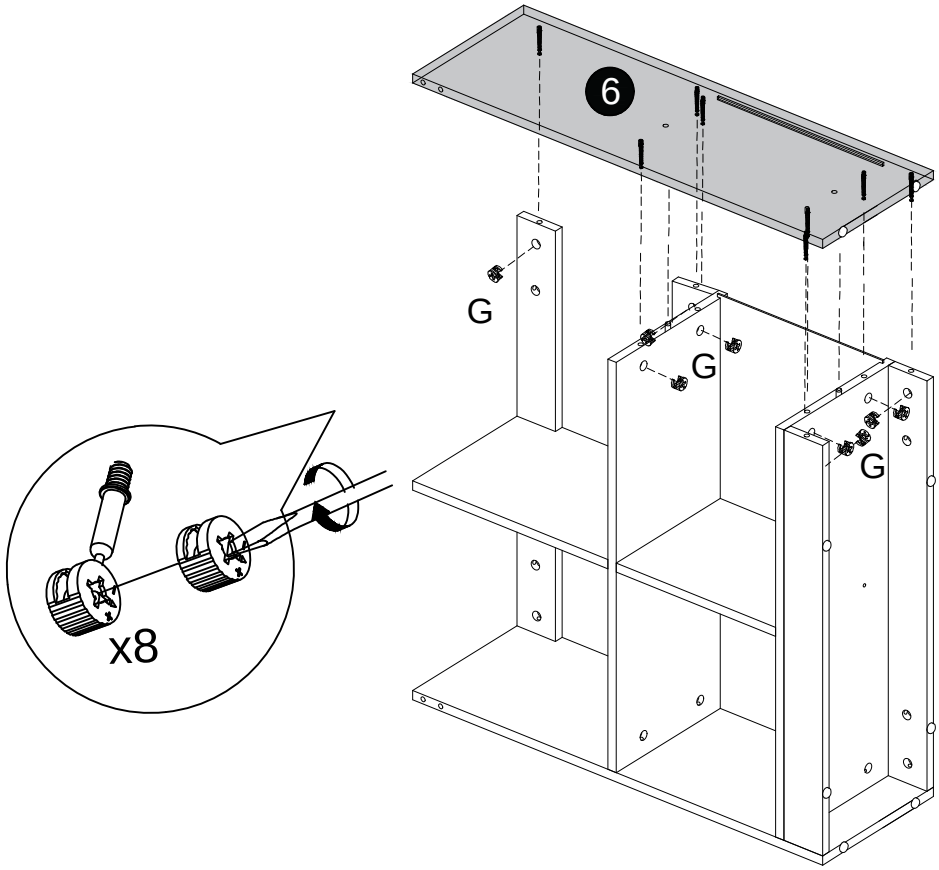

21

I x2

A M6*12 x12

P x2

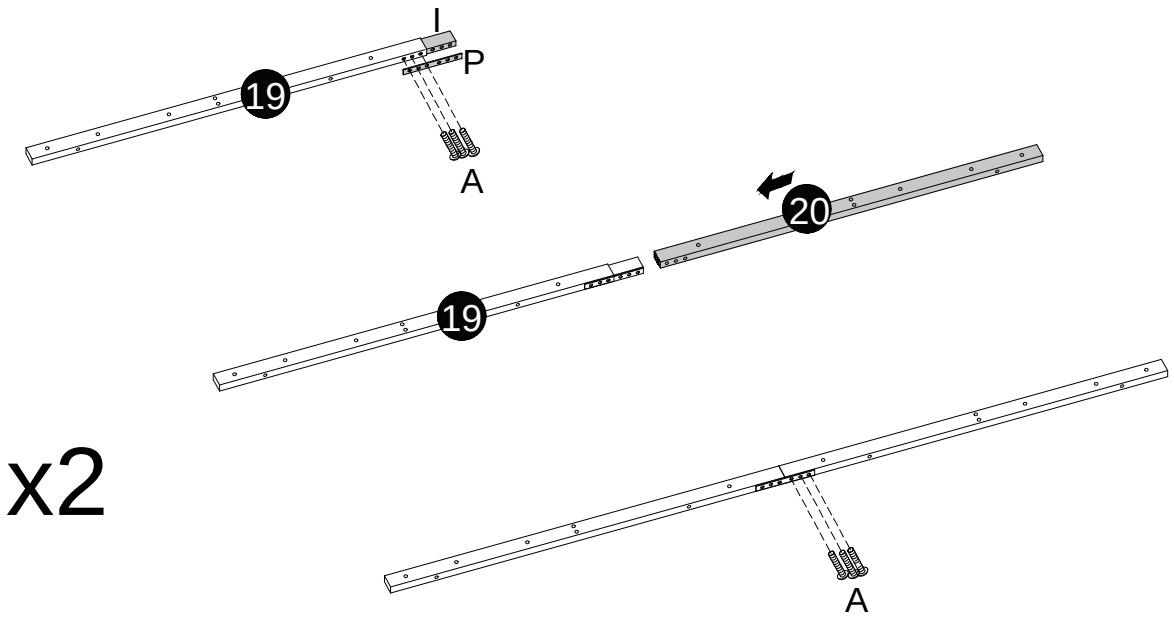

x2

22

C M6*40 x16

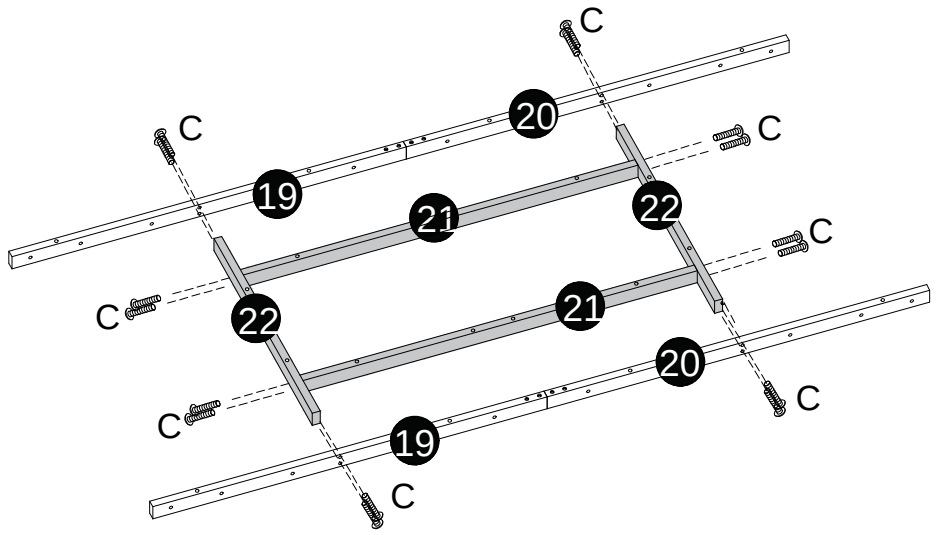

23

x2

F x4

B M6*30 x12

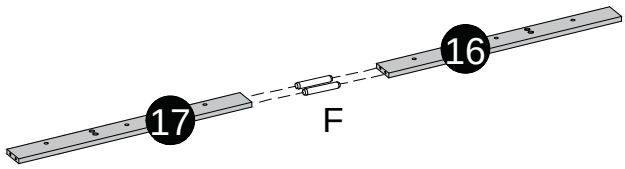

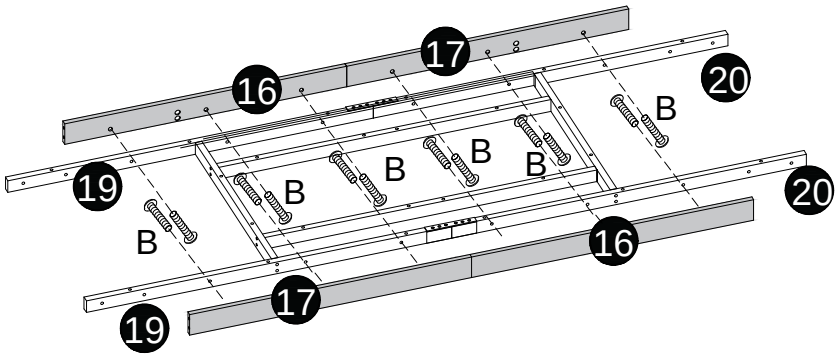

24

F x4

B M6*30 x4

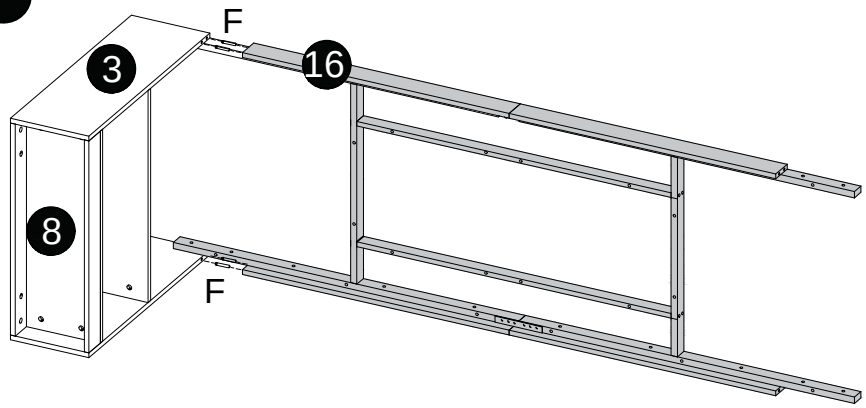

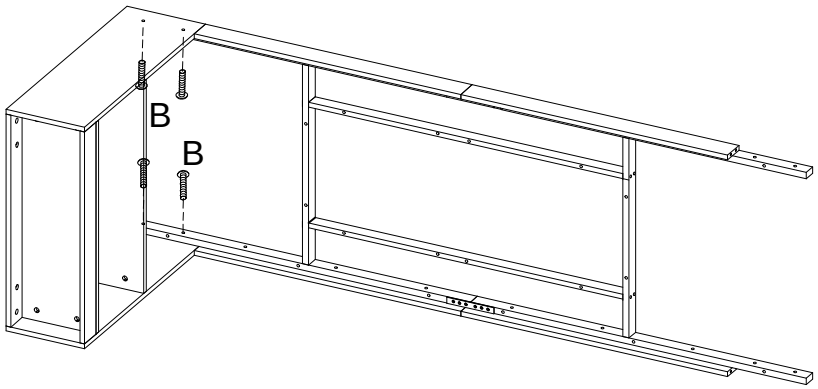

25

F x4

B M6*30 x4

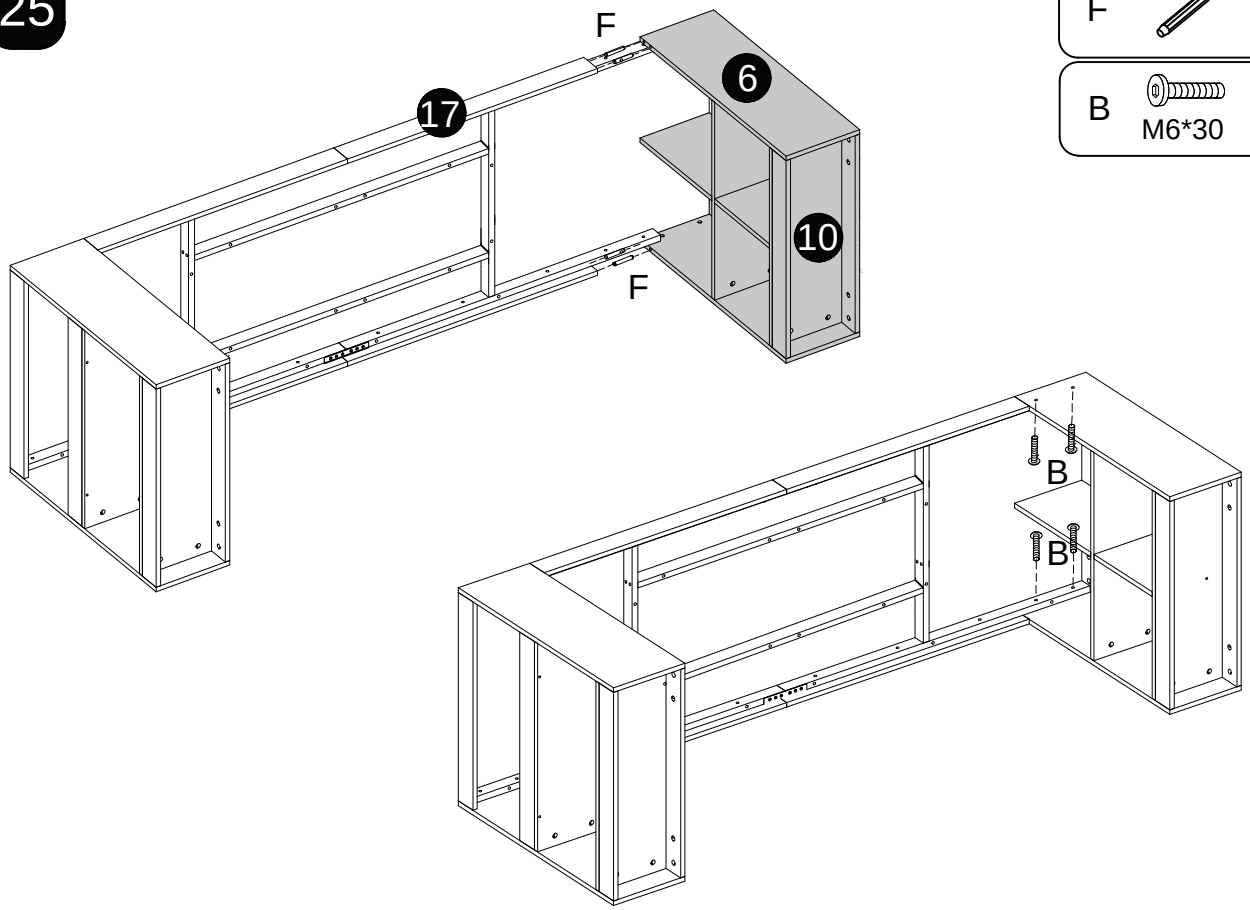

26

F x4

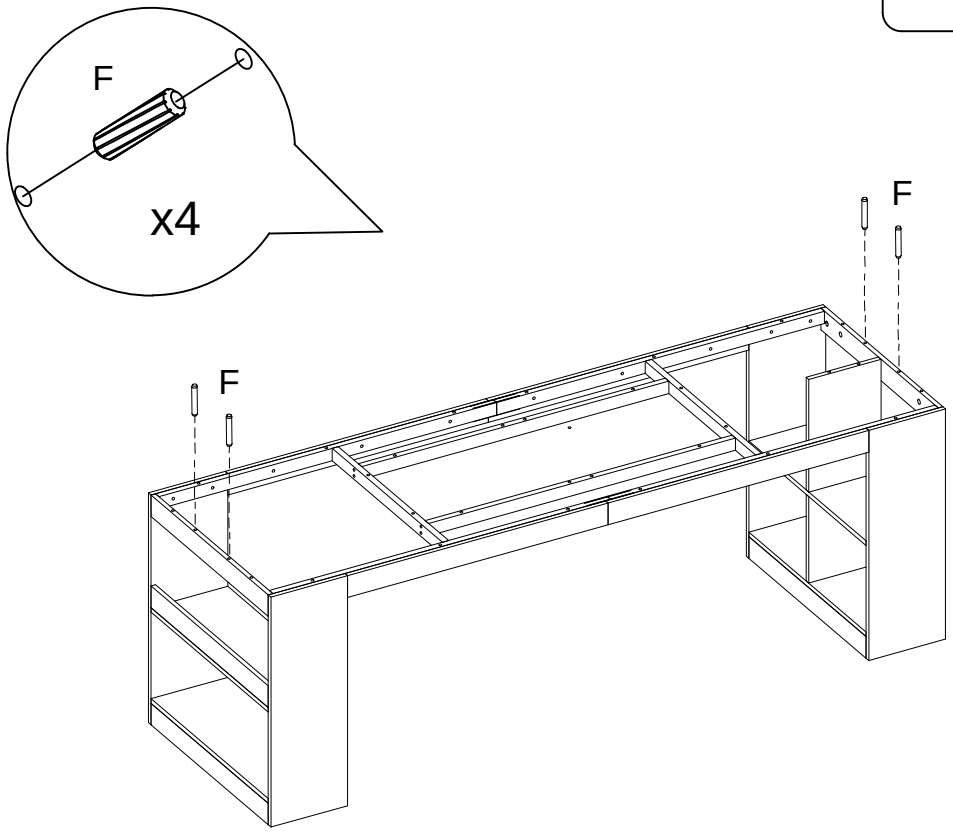

27

G x6

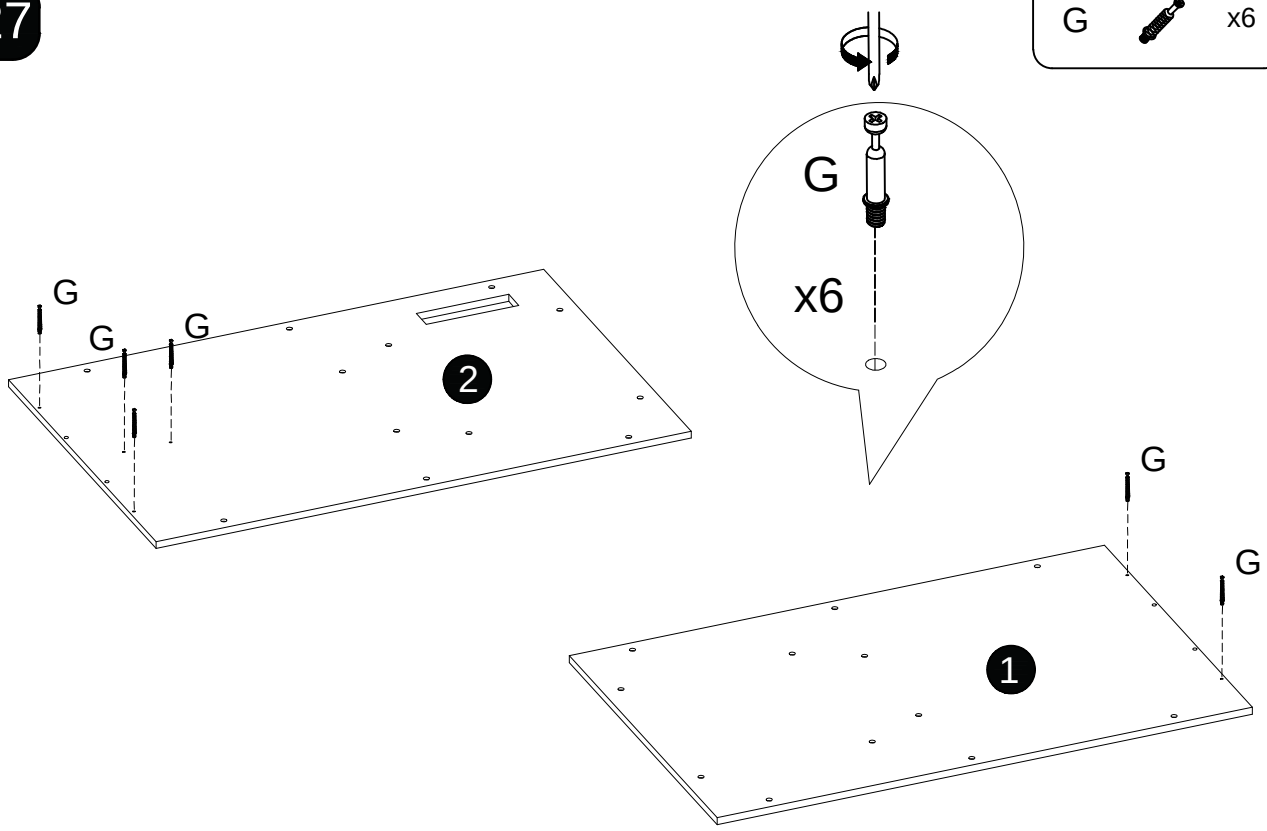

28

D M6*50 x12

G x2

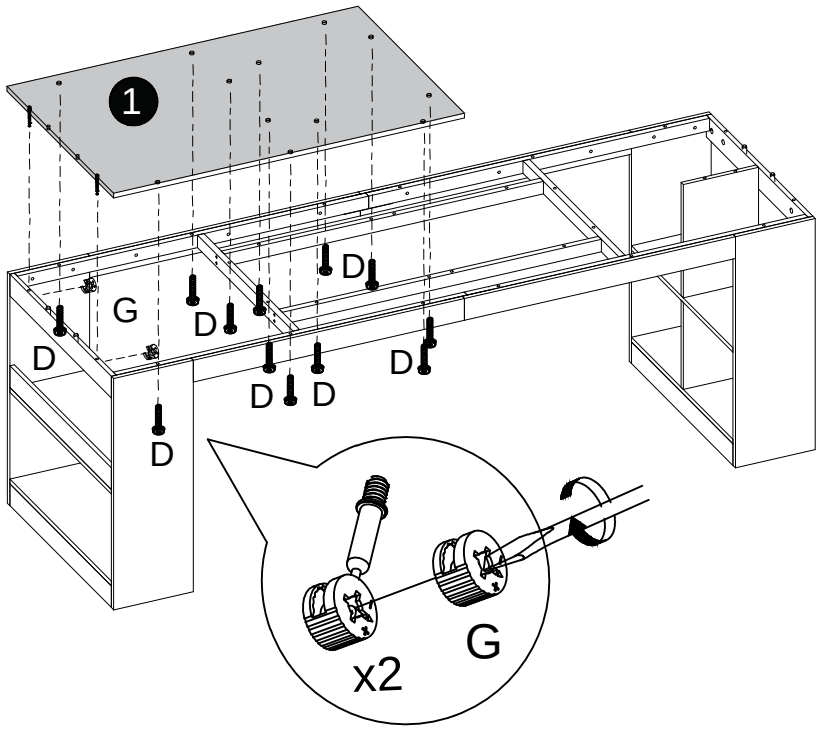

29

D M6*50 x12

G x4

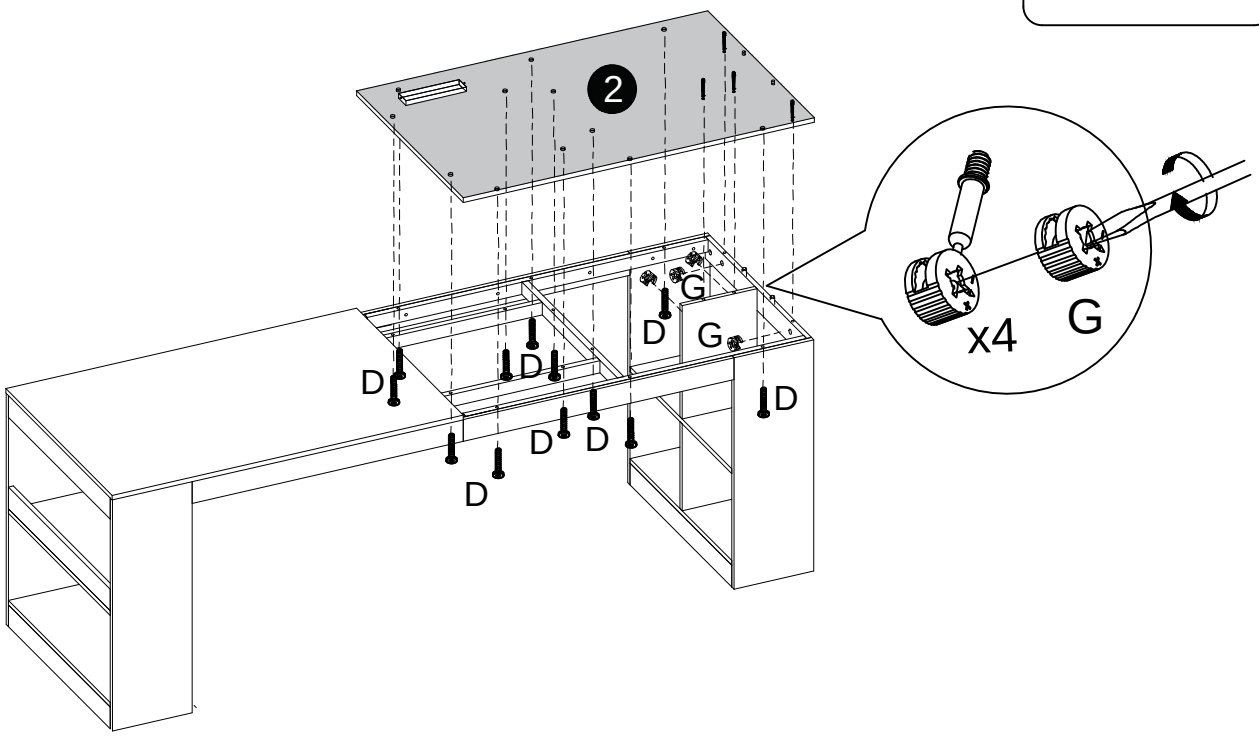

30

J x1

H M3.5*12 x2

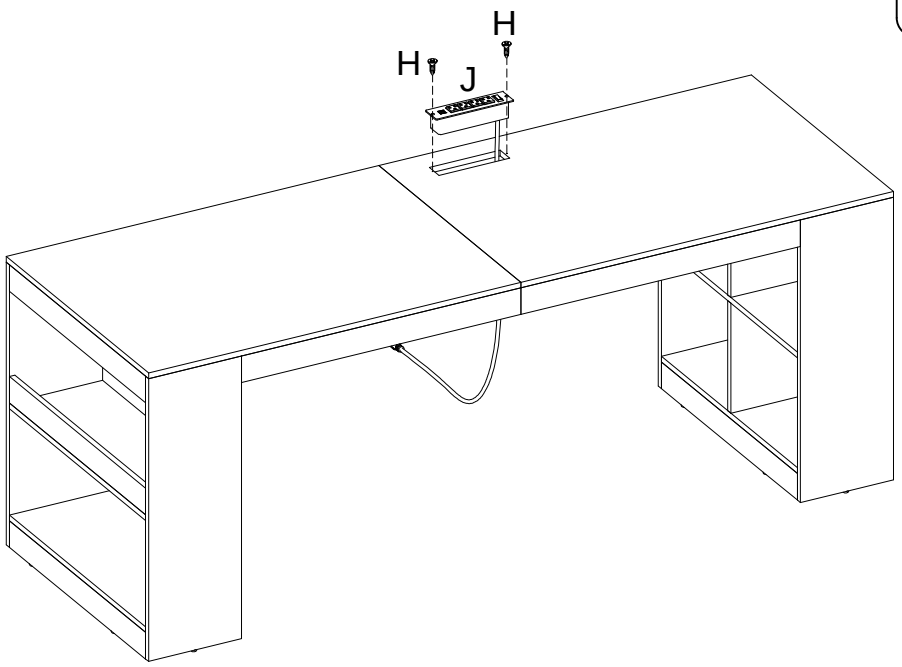

31

K x1

L x4

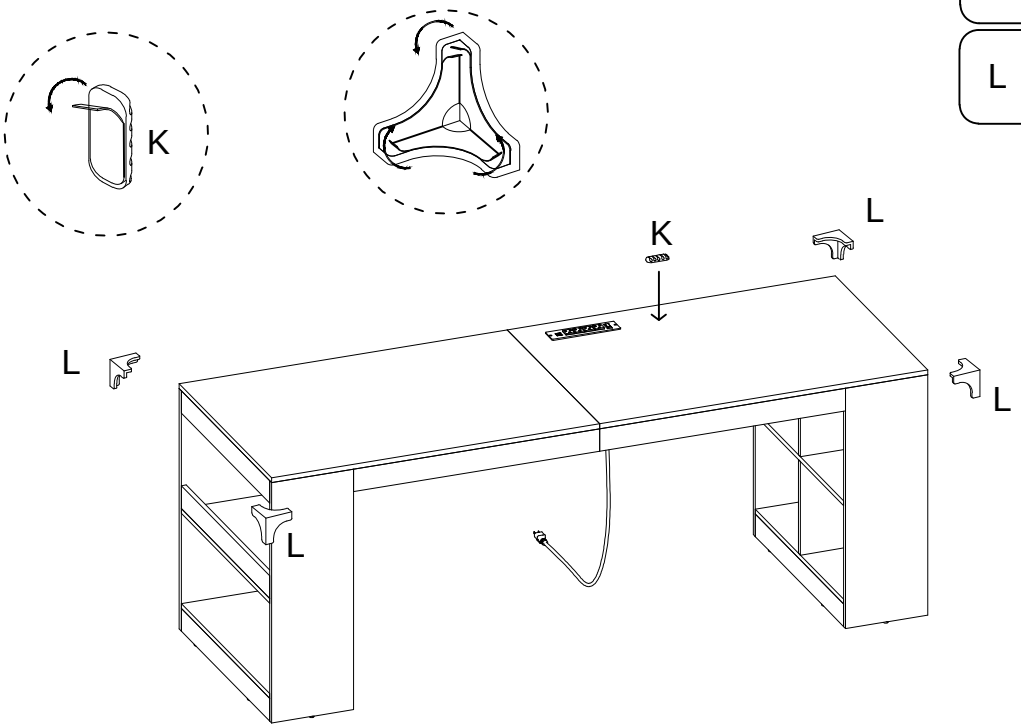

32

O x6

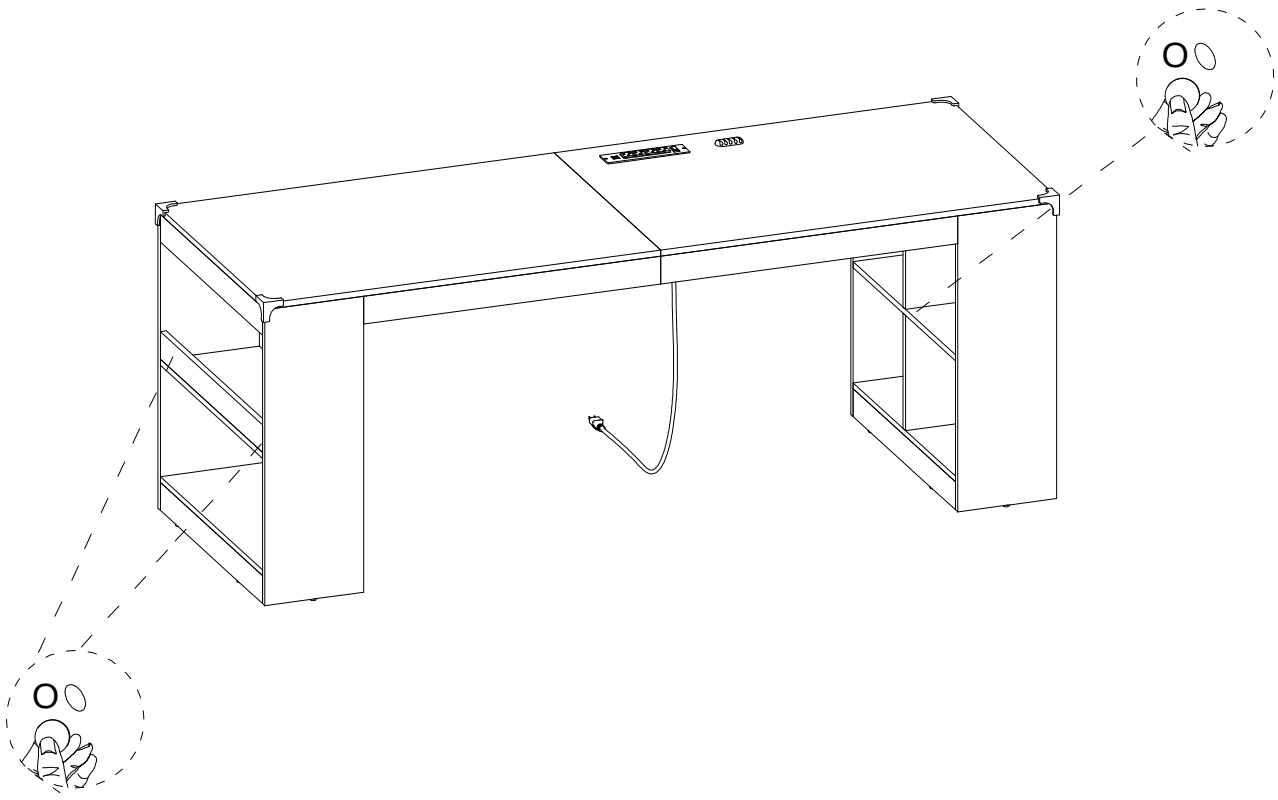

33

M x6

N x6
M3.5*14

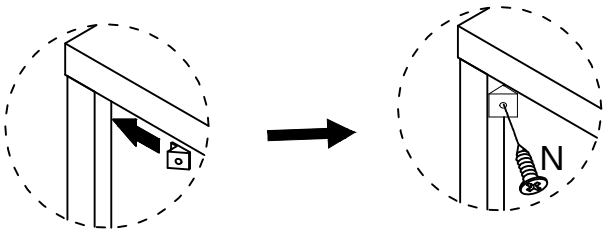

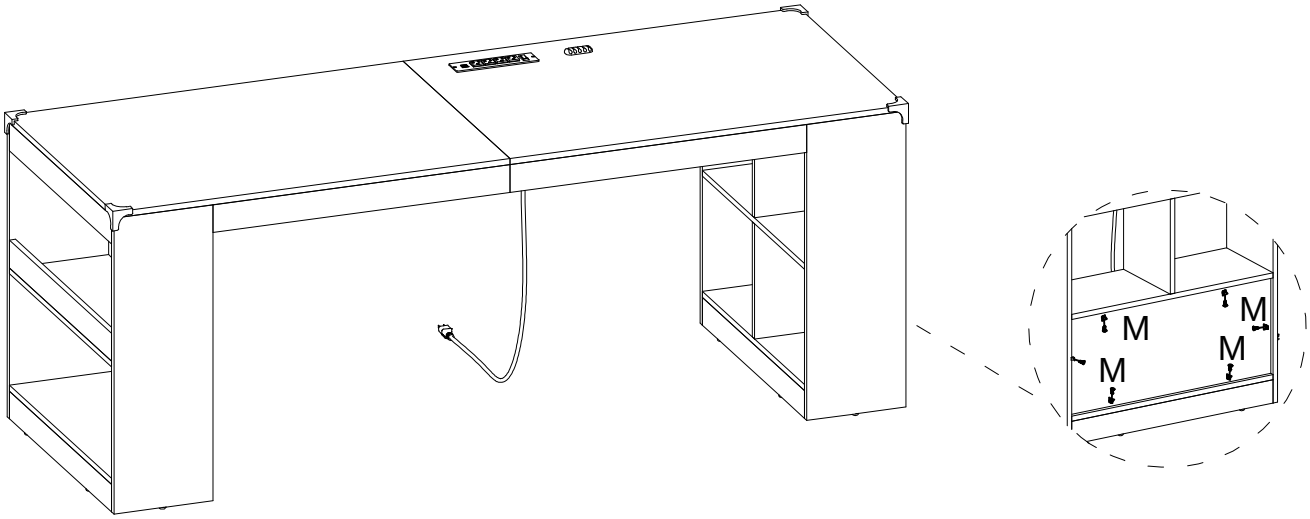

34

