ASSEMBLY INSTRUCTIONS

DESCRIPTION: CHAIR

Caution: Please read instructions thoroughly before unpacking assembly parts, Sharp, exposed staple tips can cause injury, therefore, for your protection, please remove any exposed staple used in packing.

1. We recommend that you should assemble this product with the assistance of another person;
this will make assembly easier, and will help to eliminate damage to the product or injury to persons during assembly.
2. Be sure to check all packing materials carefully for small parts that may have come loose inside the carton during shipment.
3. Please do not over tighten screws or bolts.
4. Please put all parts on a non-abrasive floor before assembly, and follow the assembly steps to assemble your newly purchased product correctly and efficiently.

PARTS LIST:

NO.	DESCRIPTION	SKETCH	QUANTITY
A	SEAT FRAME	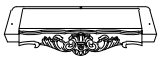	1 PCS
B	LEFT ARM		1 PCS
C	RIGHT ARM		1 PCS
D	SEAT CUSHION		1 PCS
E	BACKREST	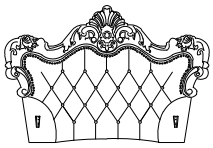	1 PCS

HARDWARE LIST:

NO.	DESCRIPTION	SKETCH	QUANTITY
F	BOLT (Ø5/16x3 1/2"-RBW)		3 PCS
G	BOLT (Ø5/16x2"-RBW)		4 PCS
H	FLAT WASHER (Ø5/16"-RBW)		7 PCS
I	ALLEN KEY (Ø5/16"-RBW)		1 PCS
J	LOCK WASHER (Ø5/16"-RBW)		7 PCS

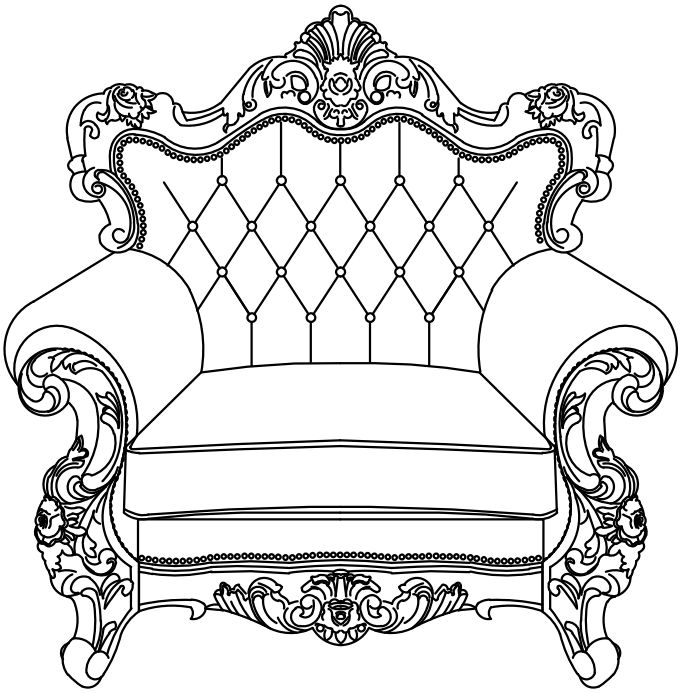

ASSEMBLY INSTRUCTIONS

DESCRIPTION: CHAIR

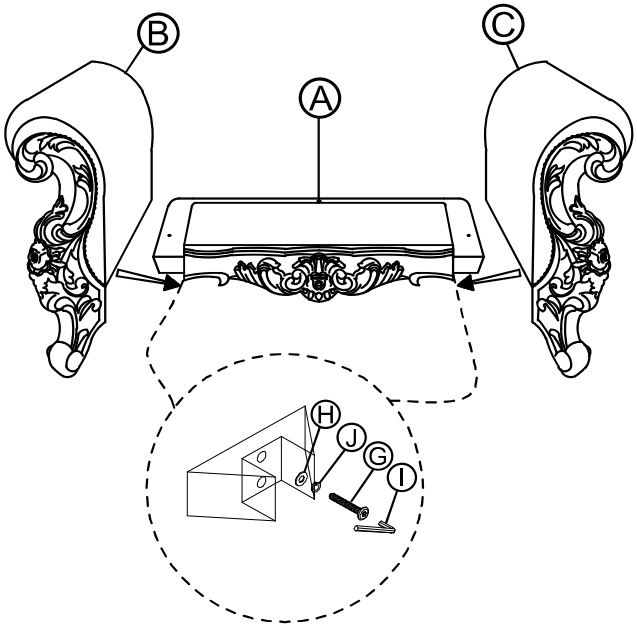

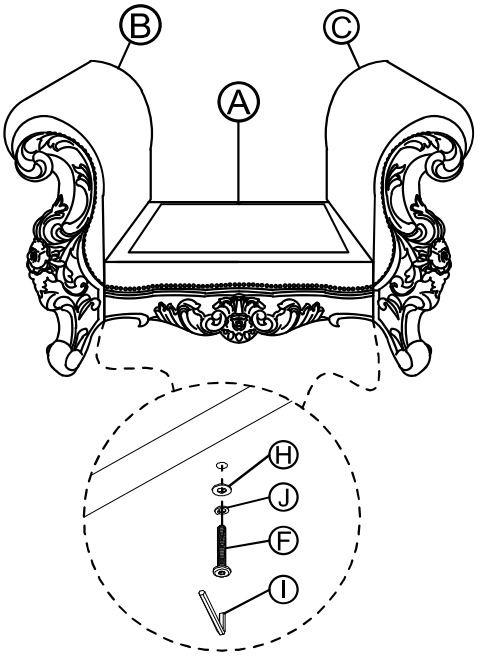

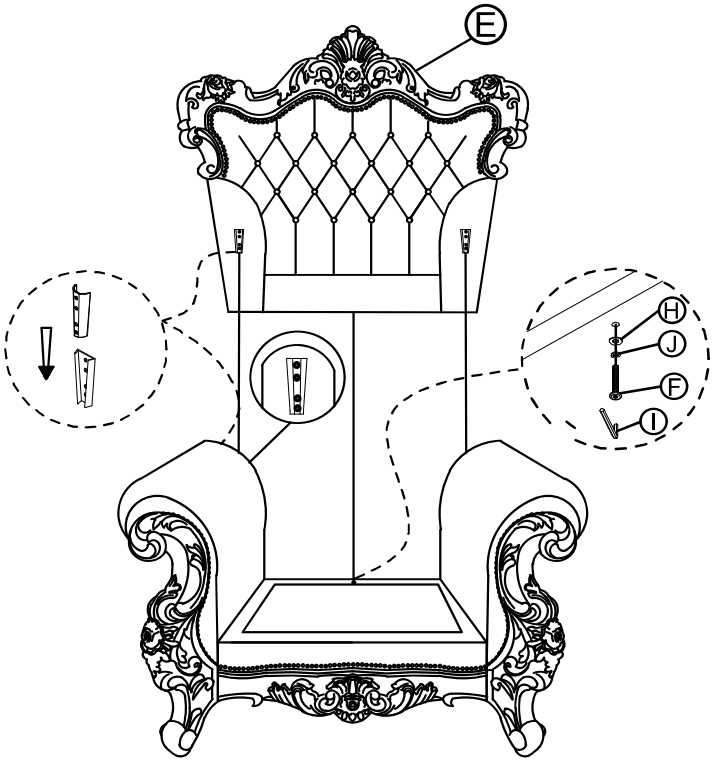

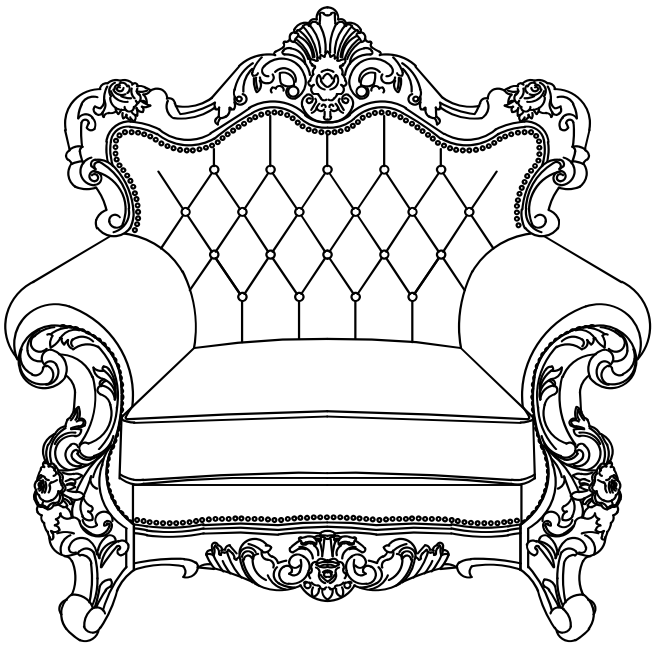

ASSEMBLE COMPLETED