Owner Manual

Nightstand set of 2

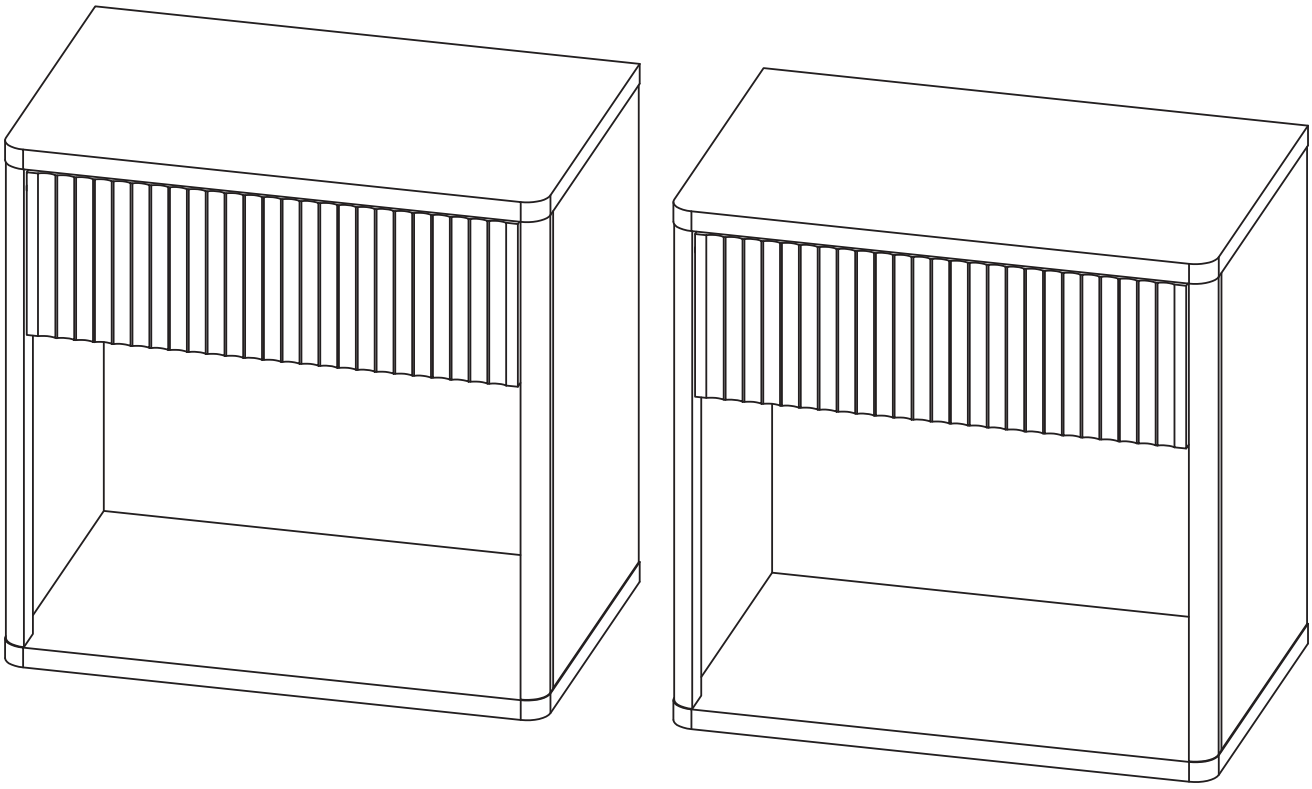

V4.2.1



IMPORTANT INFORMATION

READ CAREFULLY.

KEEP THIS INFORMATION FOR FURTHER REFERENCE.

GENERAL GUIDELINES

- Please read the following instruction carefully and use the product accordingly.
- Please keep this manual and hand it over when you transfer the product.
- This summary may not include every detail of all variations and considered steps. Please **contact us** when further information and help are needed.

NOTES

- Please follow the assembly instructions precisely and only use the product as intended.
- If an odor is present when first opening the package, please leave the unwrapped product in a shaded and ventilated area for a few days to air out.
- Prior to assembly, please check the product for defects or missing accessories. If any defects are found or accessories are missing, do not use product as damage or injury may occur;
  Please **contact us** for assistance and replacement.
- It is suggested you regularly check the products bolts and connections to ensure safe use.
- Assemble the item on a soft flat and clean surface to avoid scratches and damage.
- It is recommended that two people assemble this product.

WARNINGS

- During assembly, keep parts and packaging materials away from children and pets as there could cause injury and are a potential choking hazard.
- Avoid sharp objects or corrosive chemicals to prevent damage to the product.
- Please open the item slowly and cautiously to avoid pinching your hands by metal joints, especially children.

ANTI-TIP WARNING

- Serious or fatal crushing injuries can occur from furniture tip-over. To prevent this furniture from tipping over it must be permanently fixed to the wall.
- Since different wall materials require different types of fixing device, for advice on suitable fixing systems, contact your local specialized dealer.



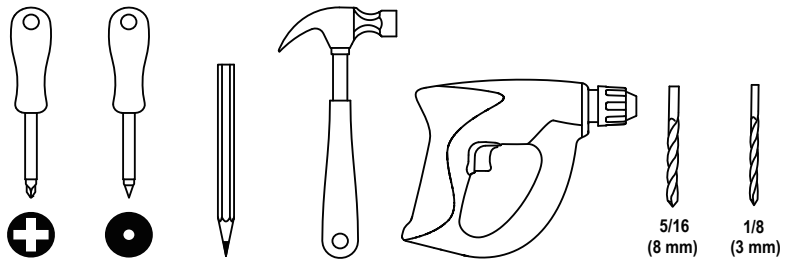



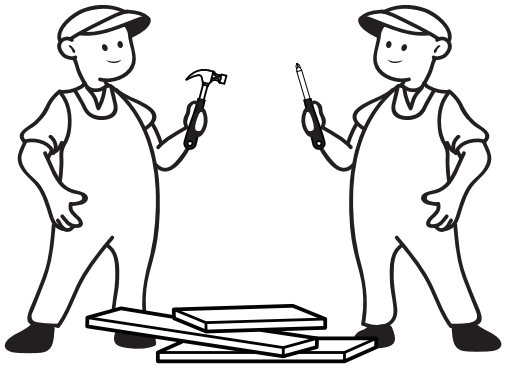





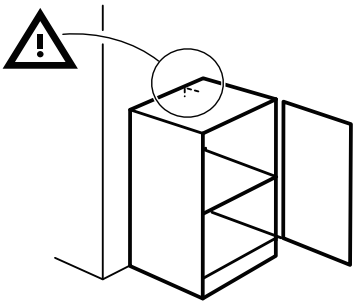

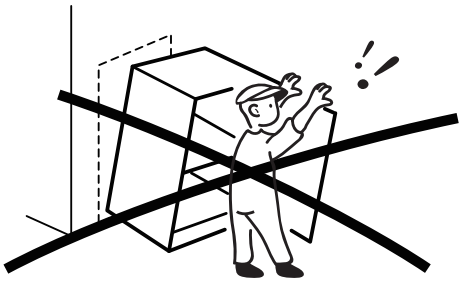

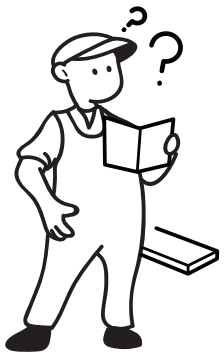

- If you have any further questions, please feel free to contact our customer service.
  We will reply ASAP.
- Before installation, please make sure you have all the hardware, the serial numbers are properly labeled corresponding to the list, and the quantity is correct.
- Enjoy your new purchase!

EXPLODED DRAWING

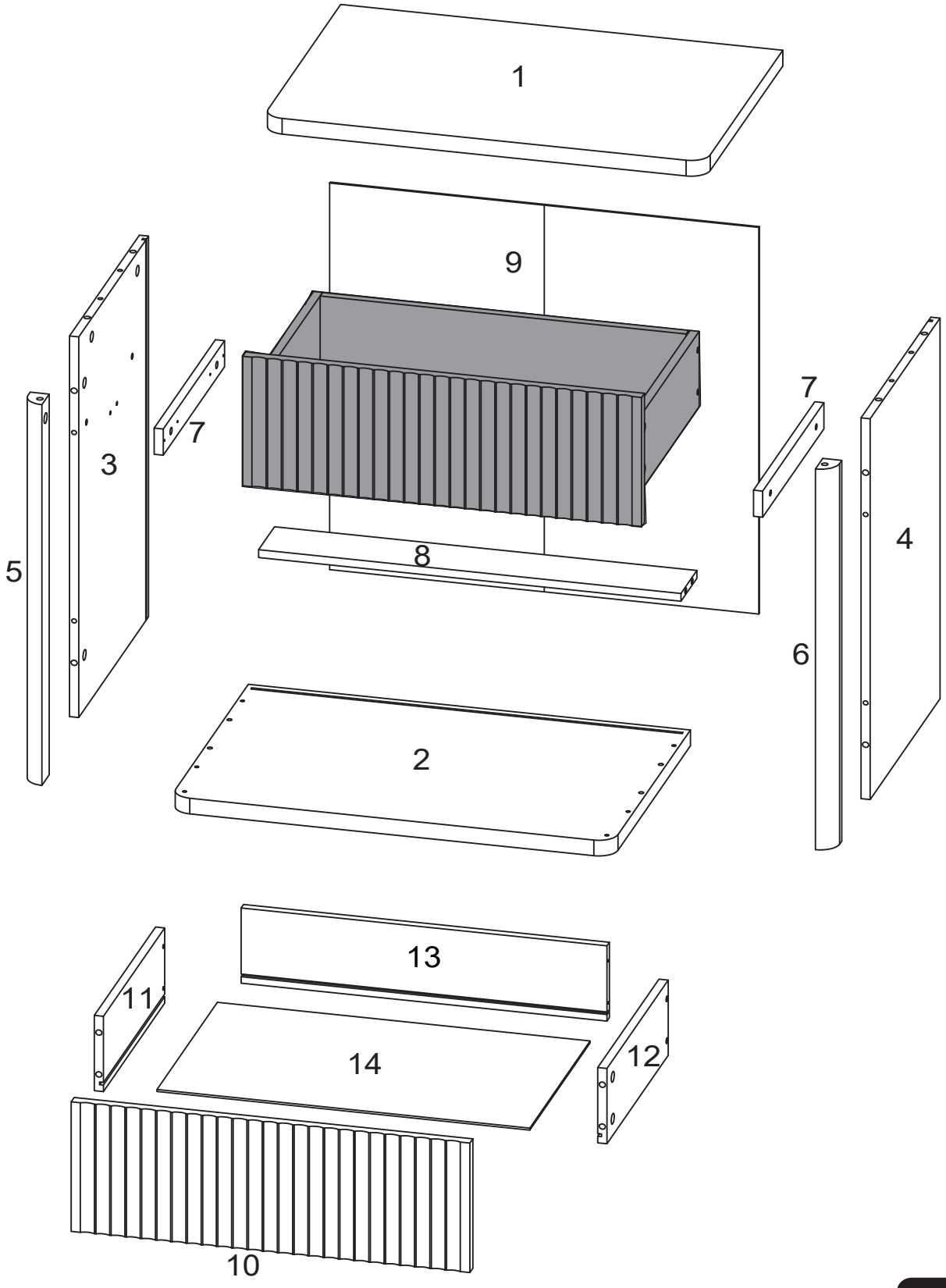

×2

PARTS

A X36
M6x35

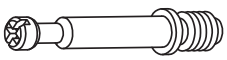

B X36
M15x10



C X24
M6x30



D X2
300mm

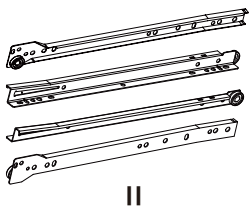

II

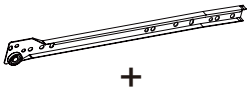

CL

+



DL

+



DR

+

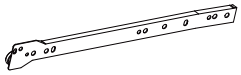

CR

E X16
M4x10



F X12
M5x40



G X8
M6x16

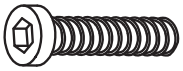

H X8
35×35



J X8
13x13×10



K X8
M3x14



L X8
M4x35



M X1
M4

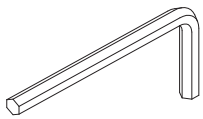

N X1
M3

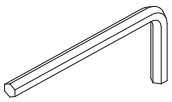

P X1
120

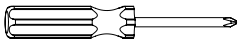

REMARK

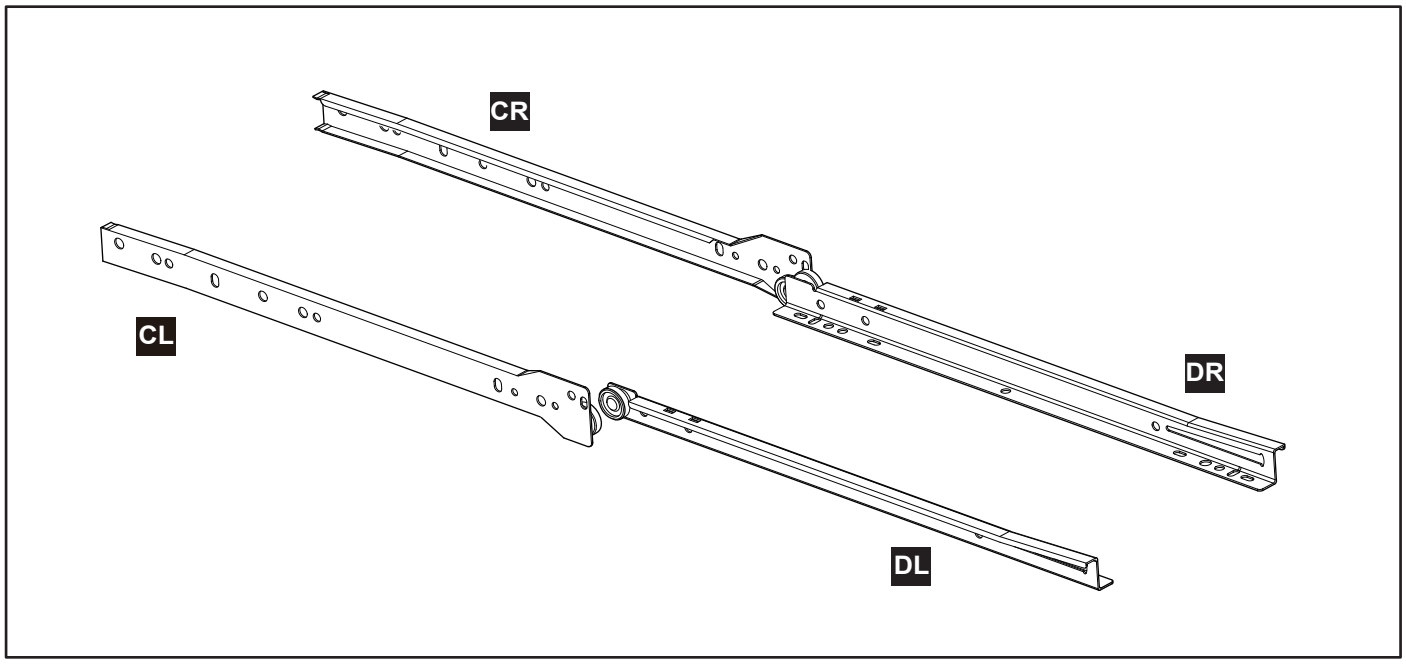

MINIFIX POSITION

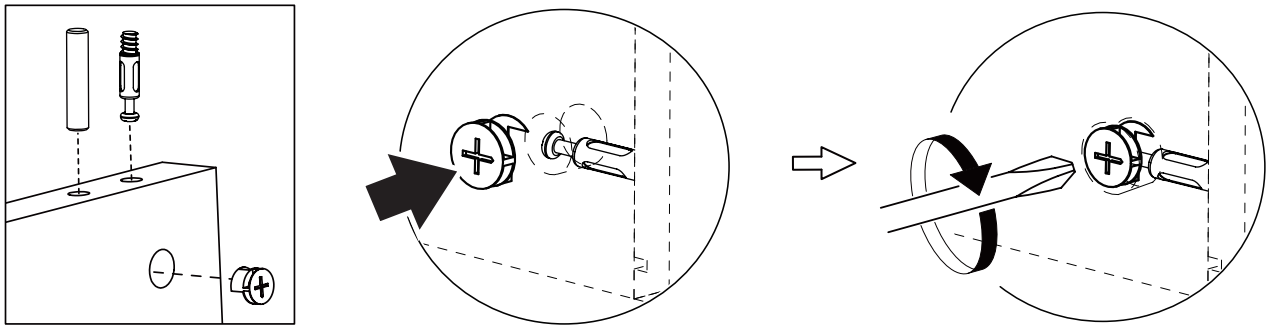

1

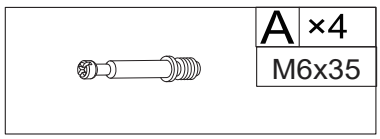

REMARK

1. Put a blanket under the board to avoid scratch or damage.

Please do not screw **A** too deep or too shallow.

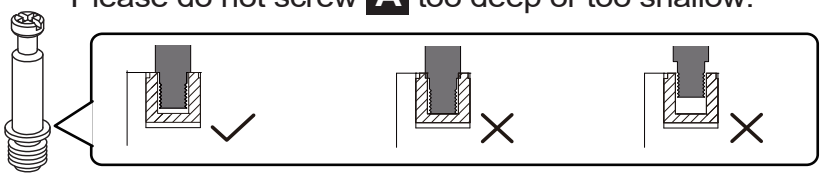

2

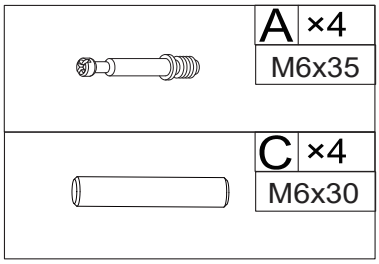

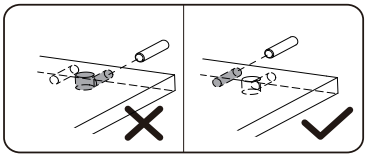

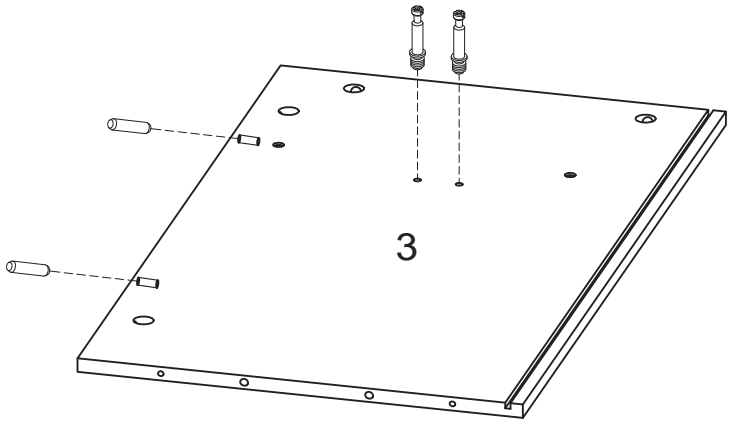

3

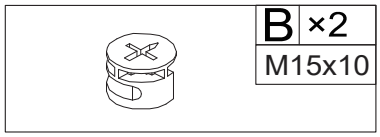

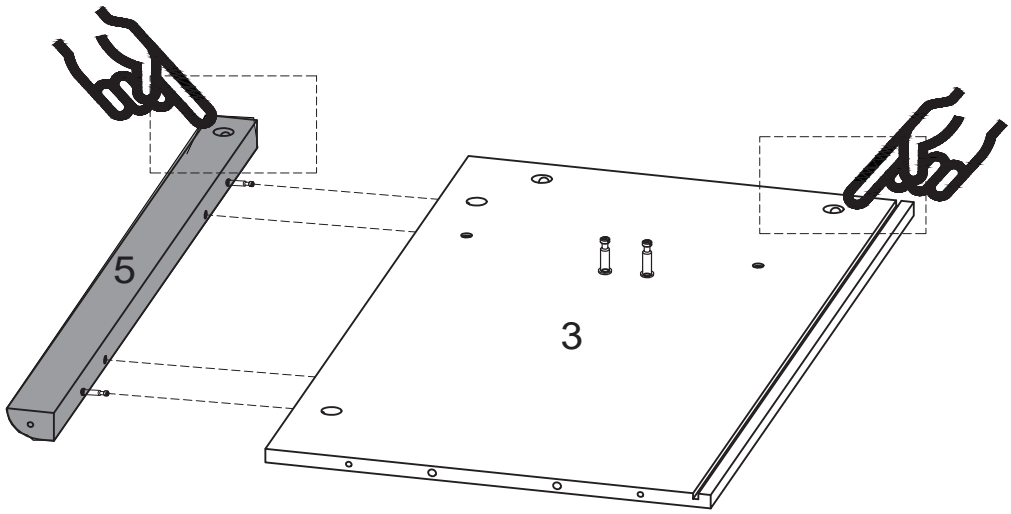

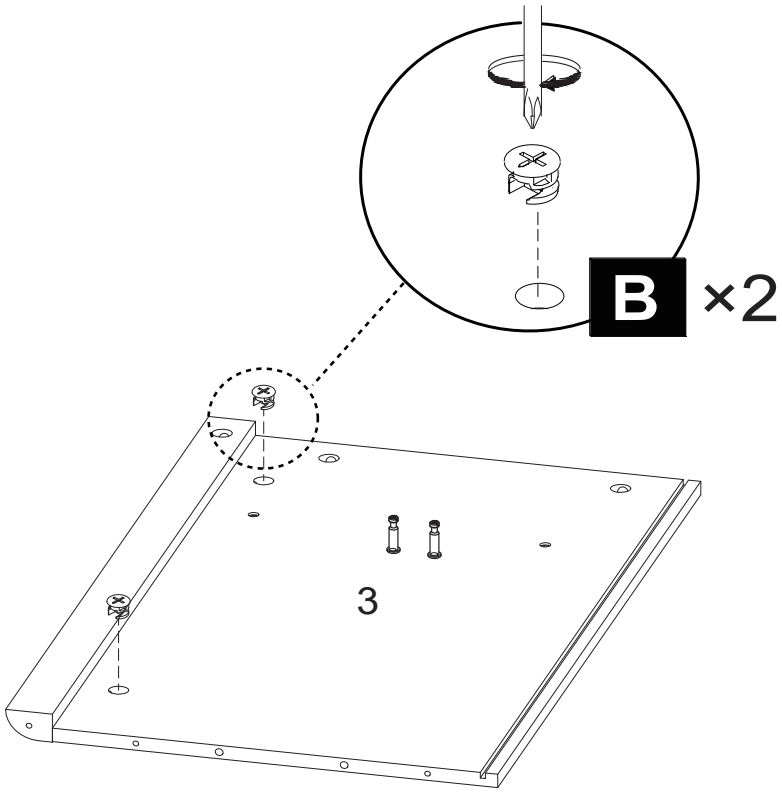

4

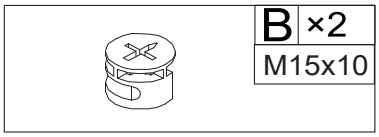

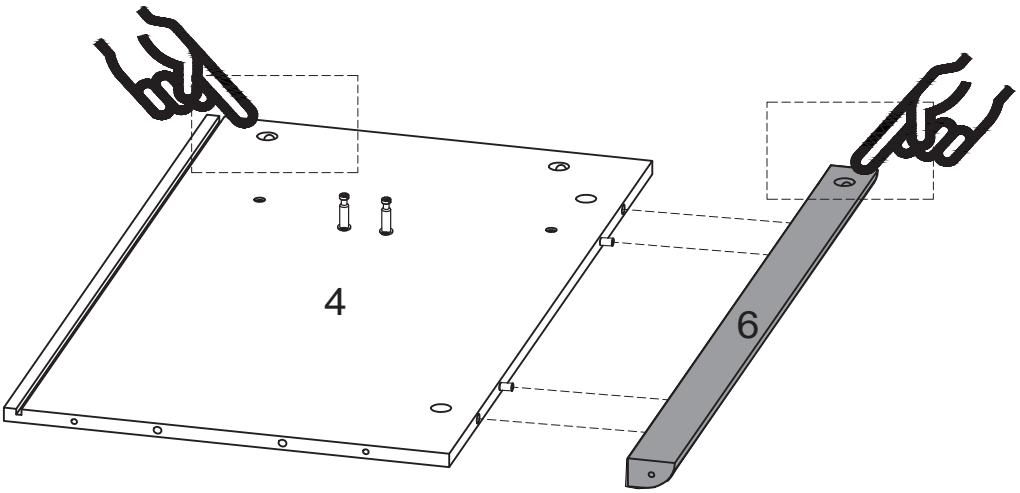

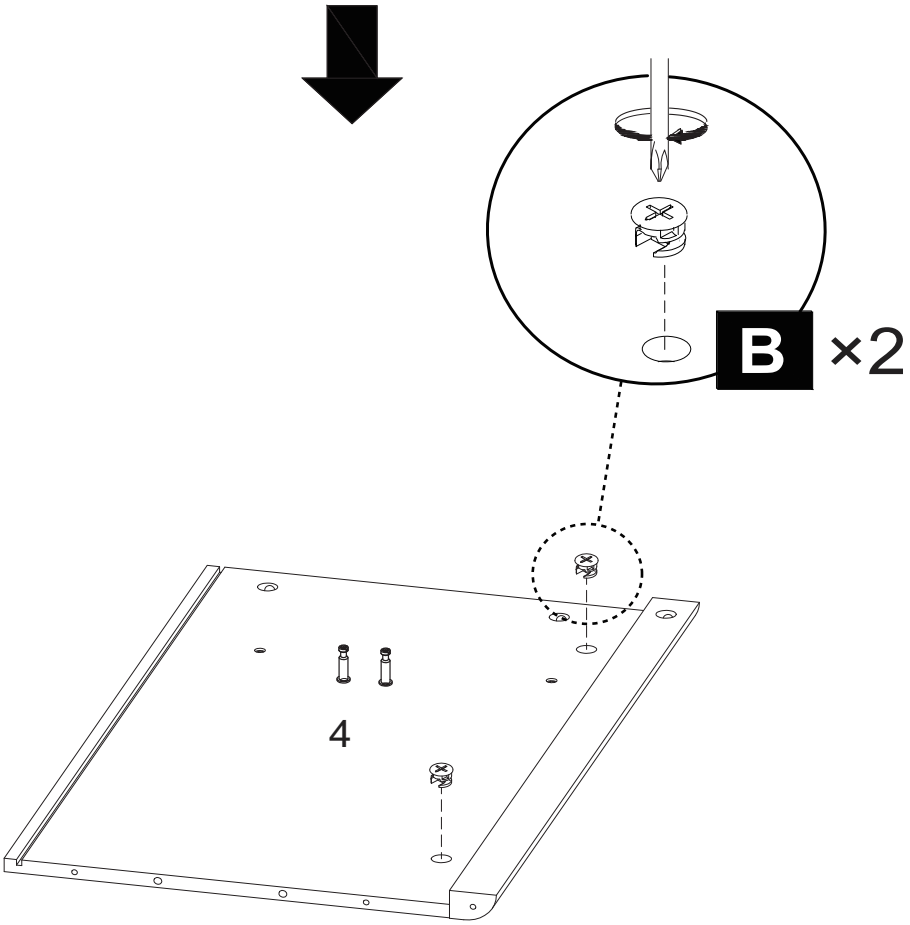

5

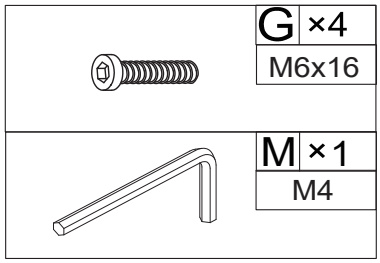

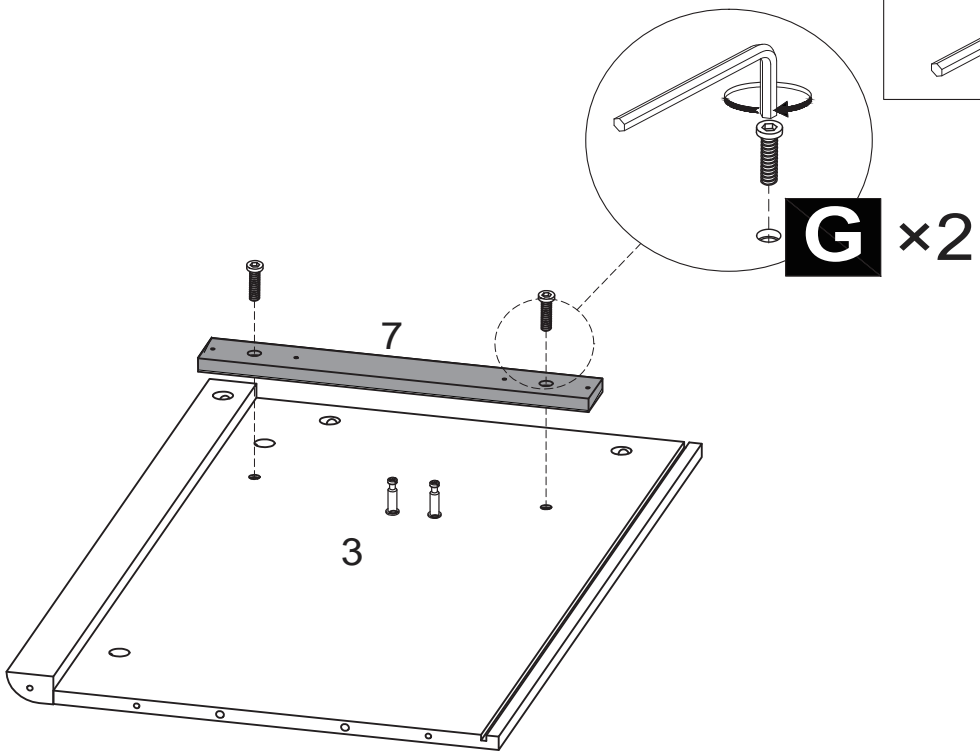

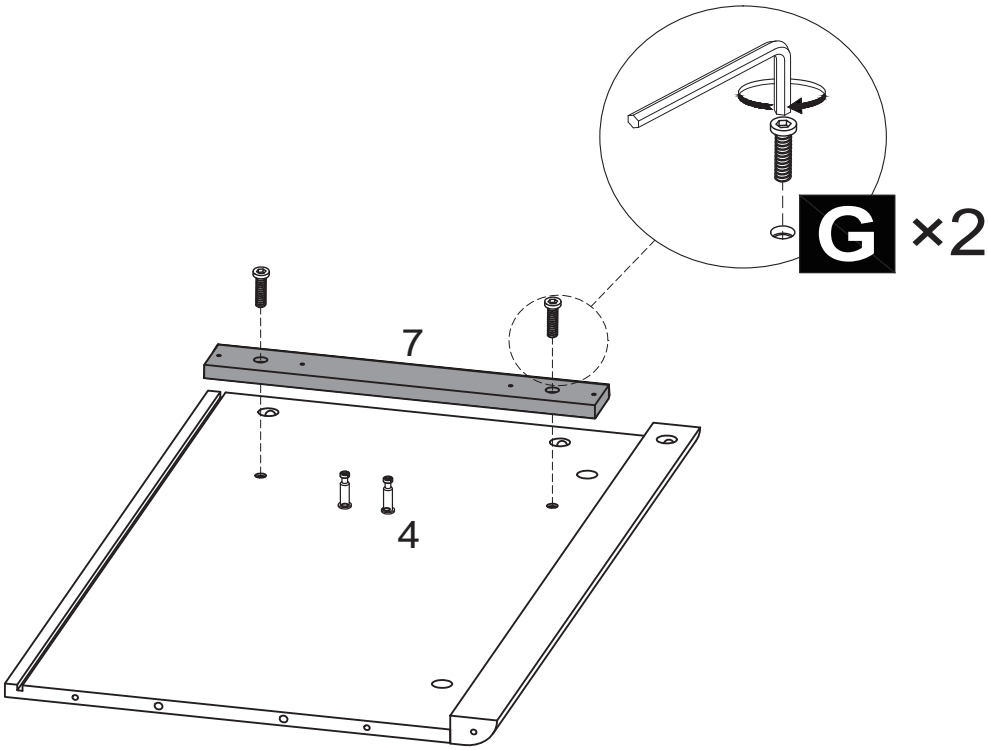

6

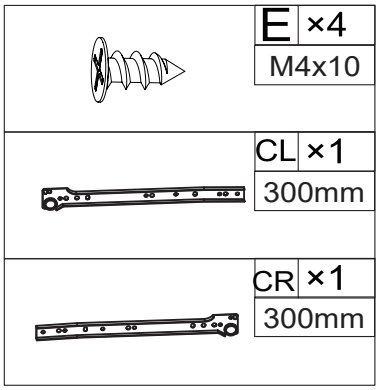

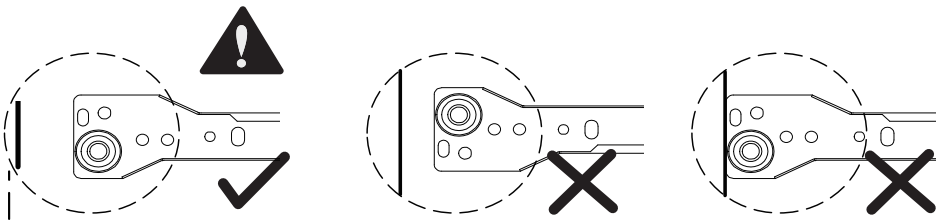

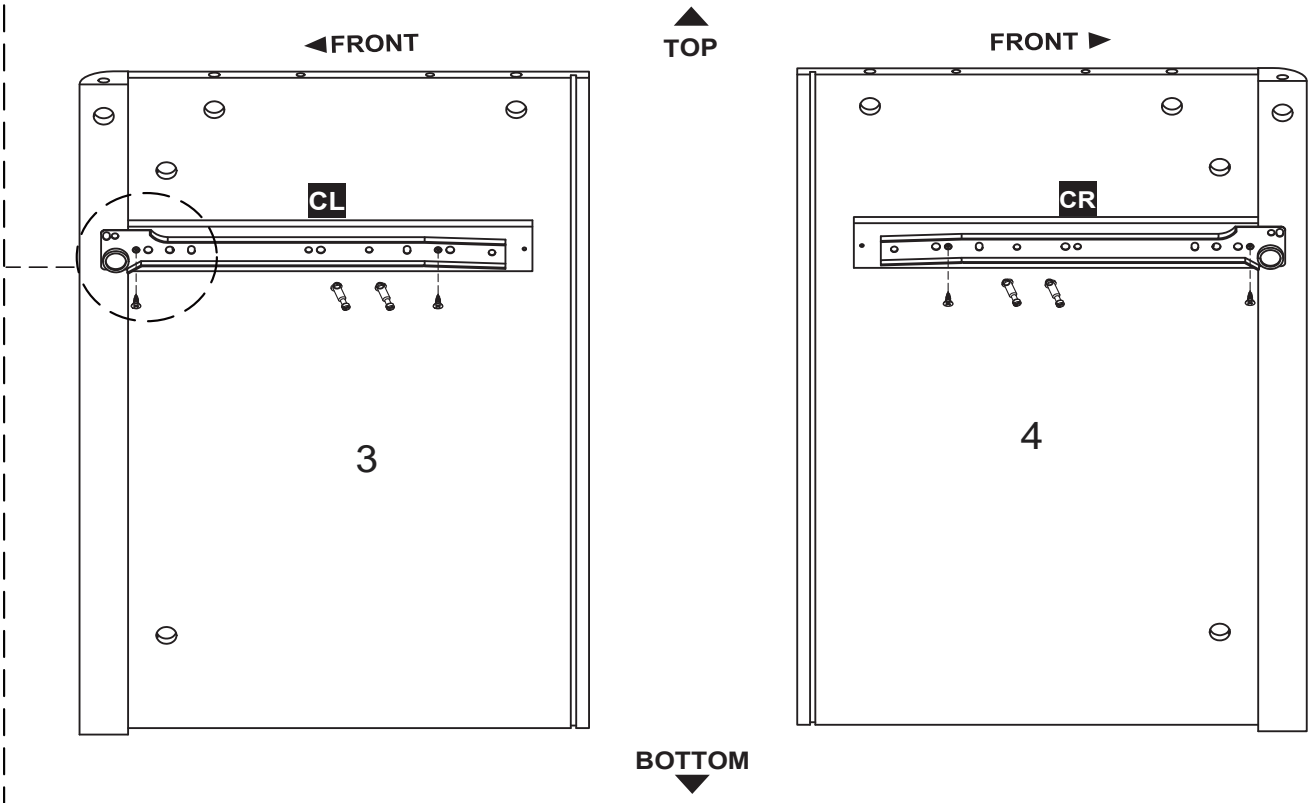

REMARK

When installing, please make sure the screws are flattened, not crooked; Otherwise the drawers will not be installed perfectly.

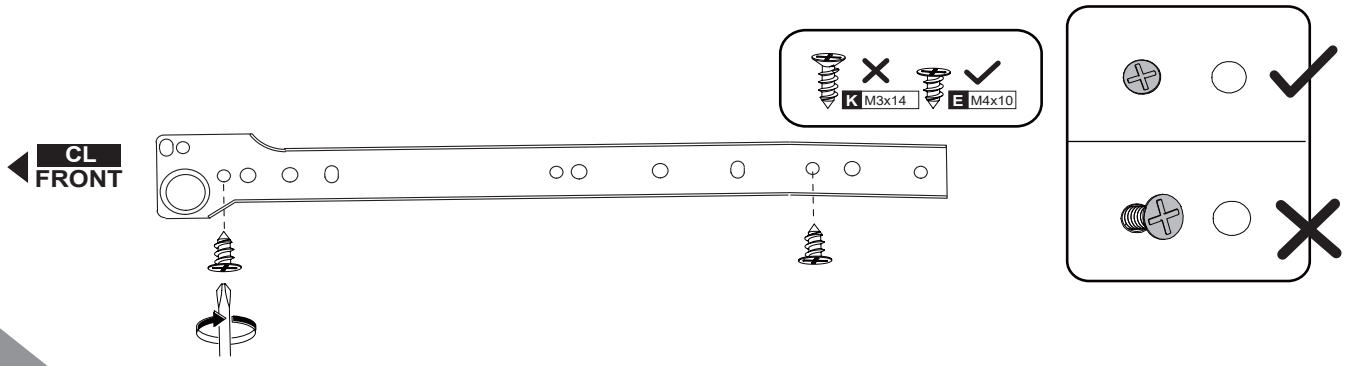

7

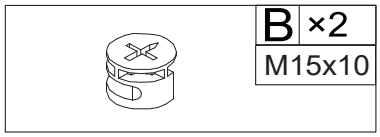

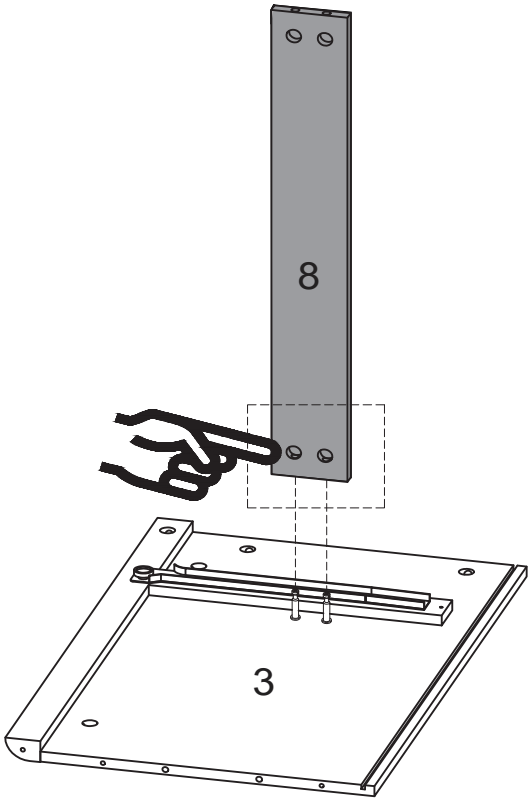

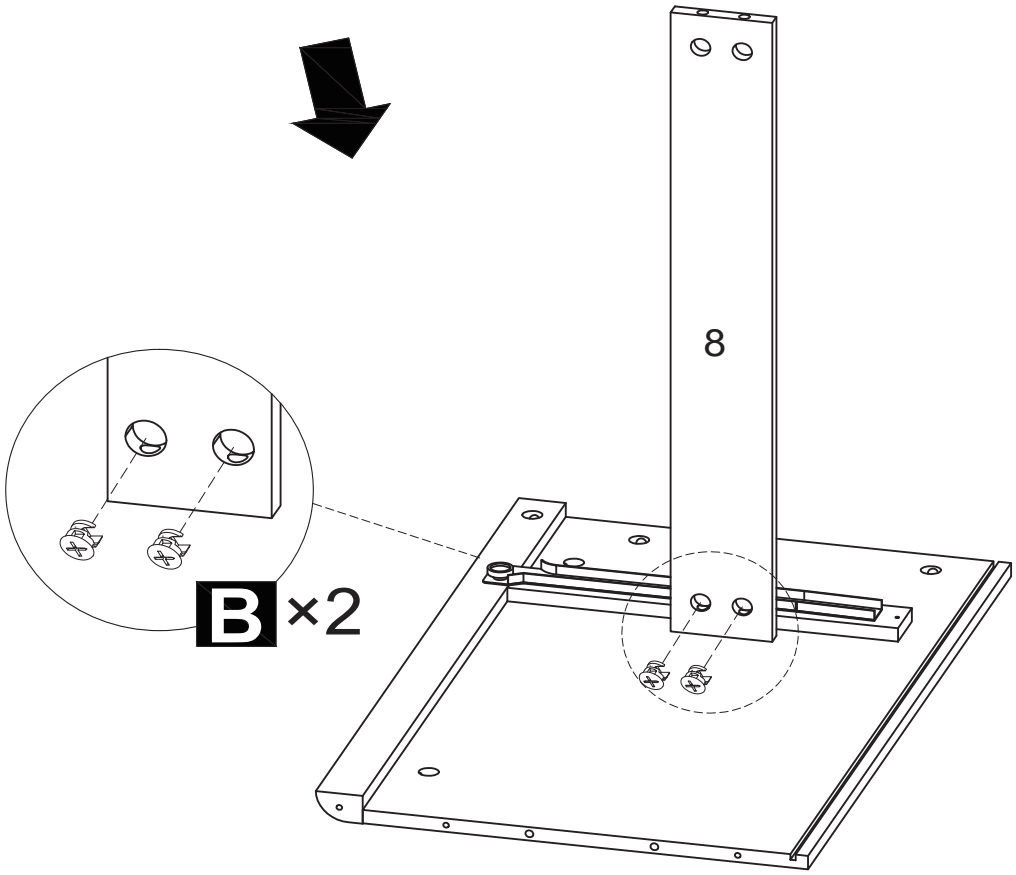

8

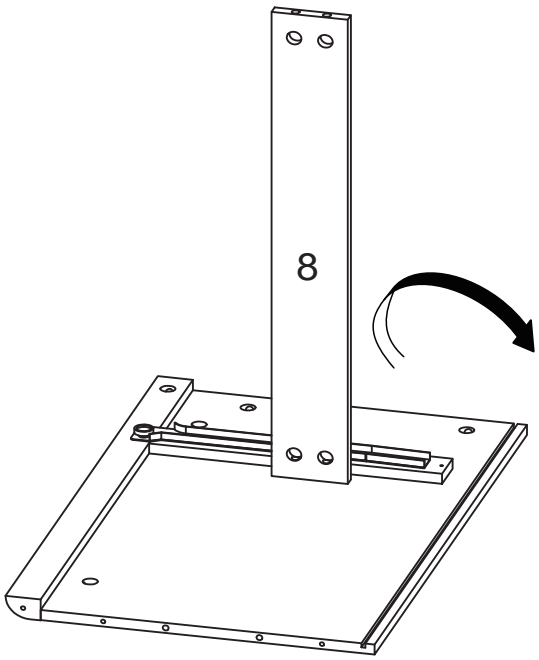

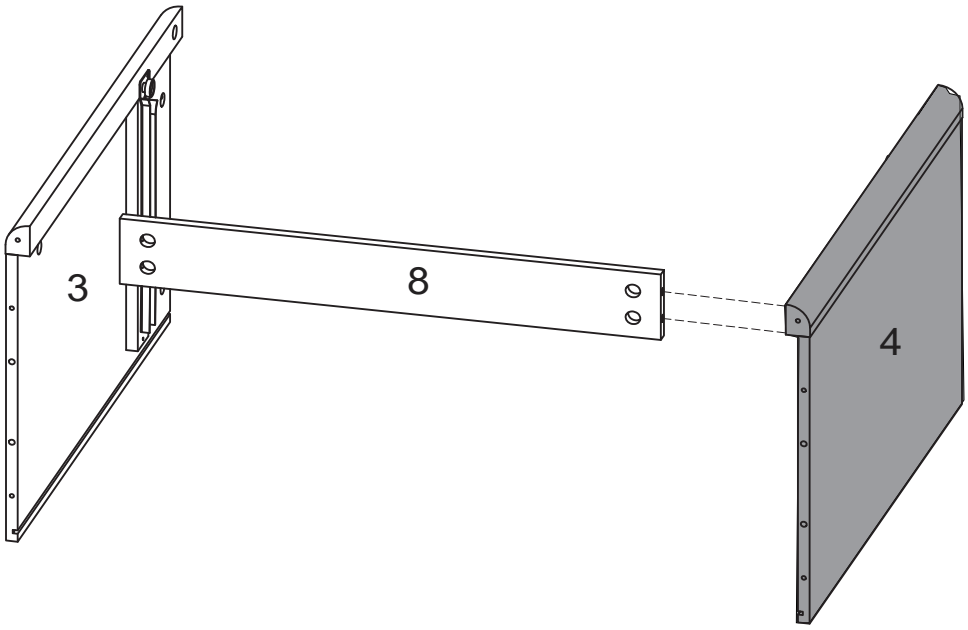

9

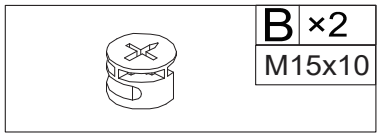

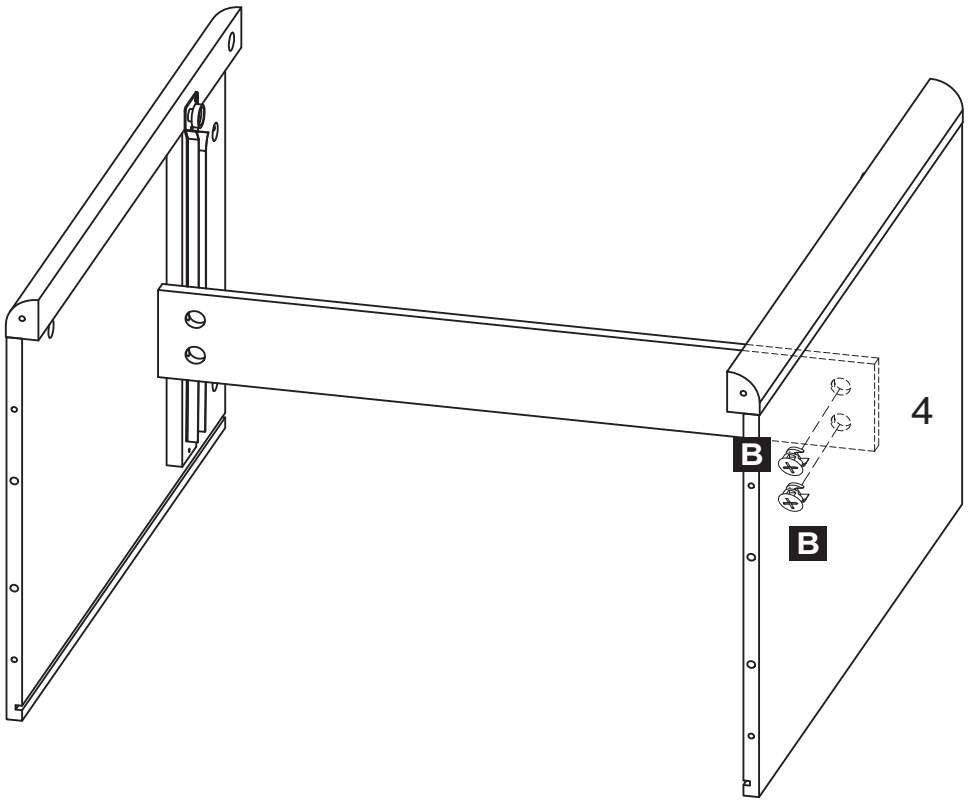

10

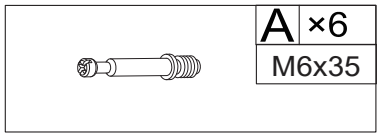

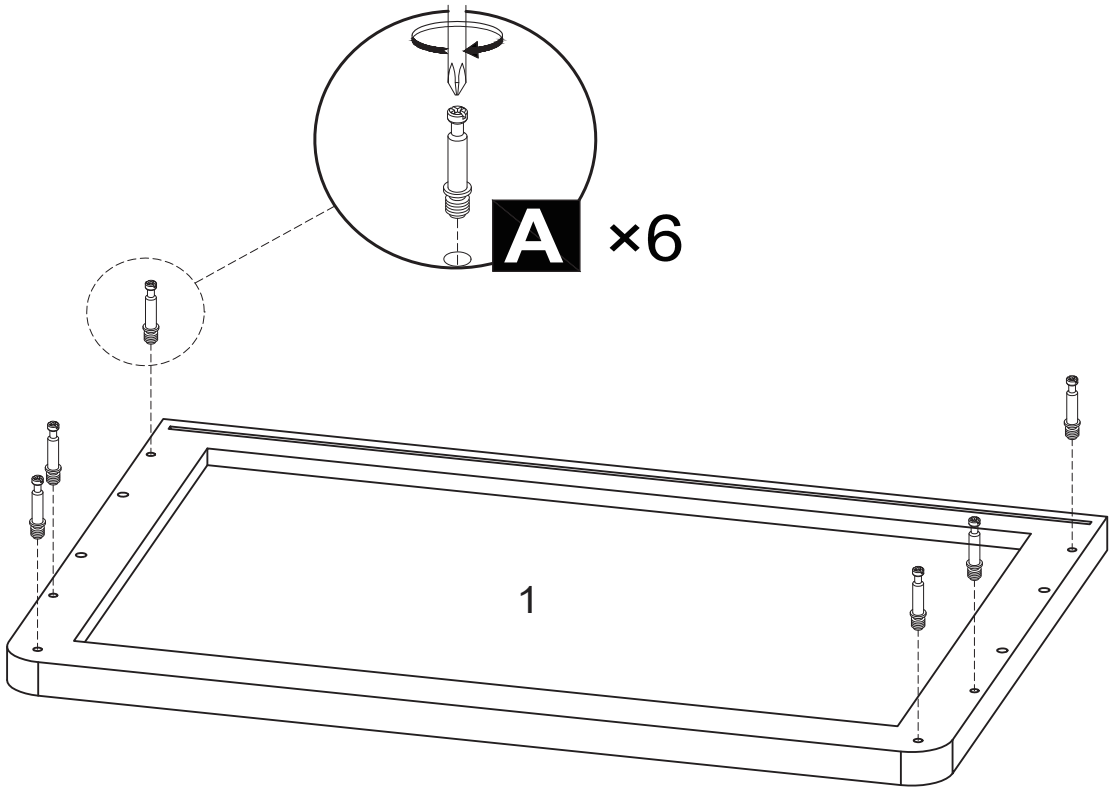

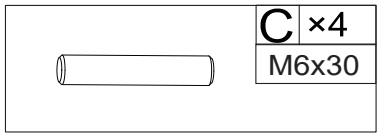
C ×4
M6x30

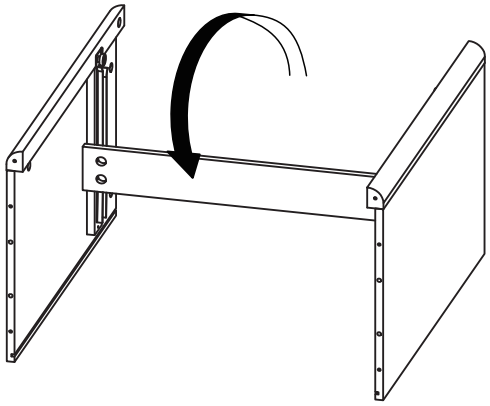

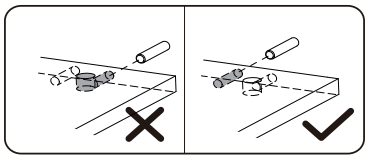

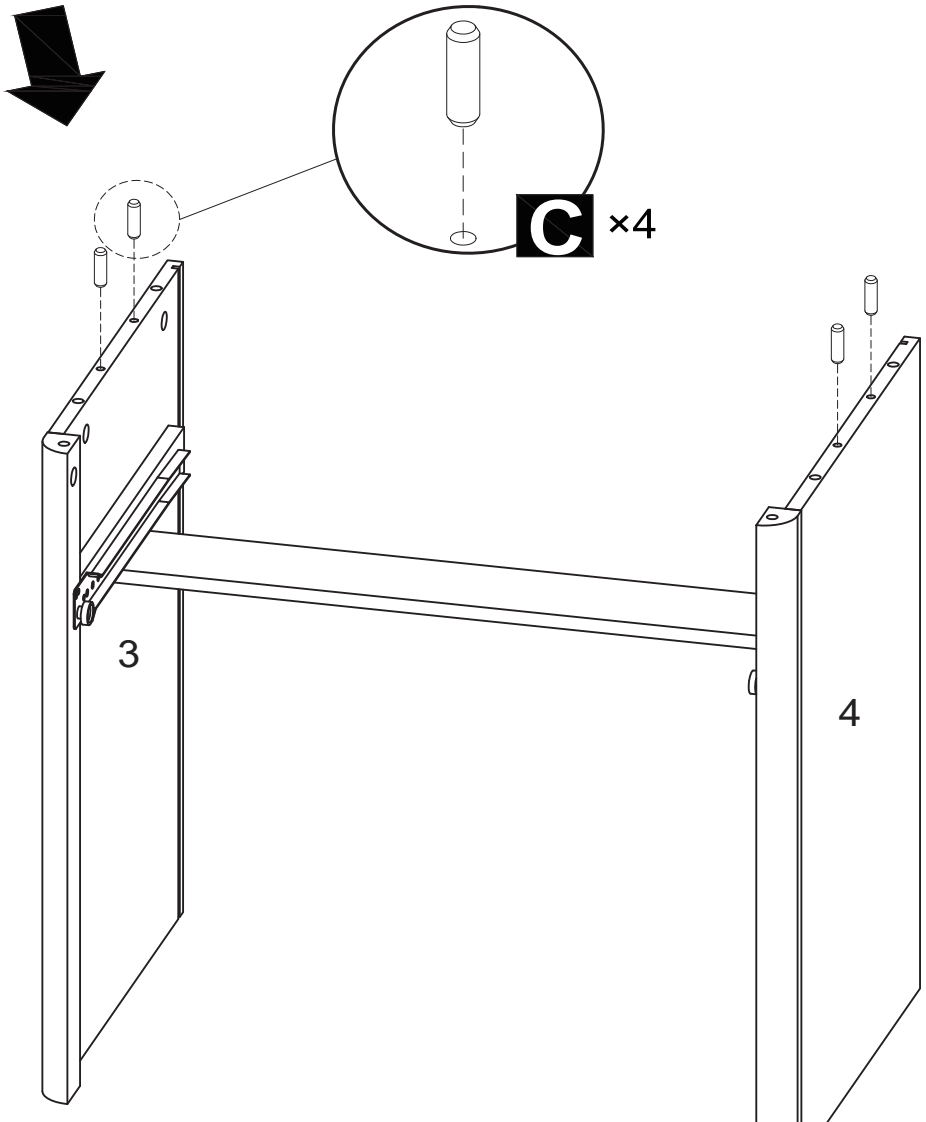
C ×4
3
4

12

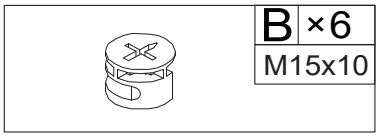

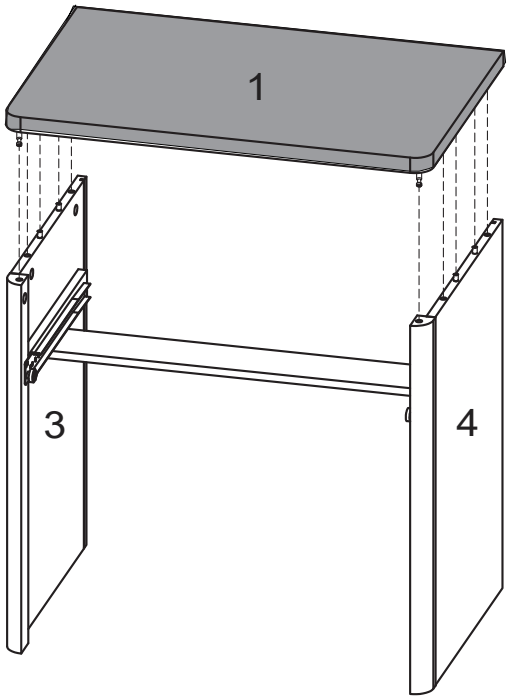

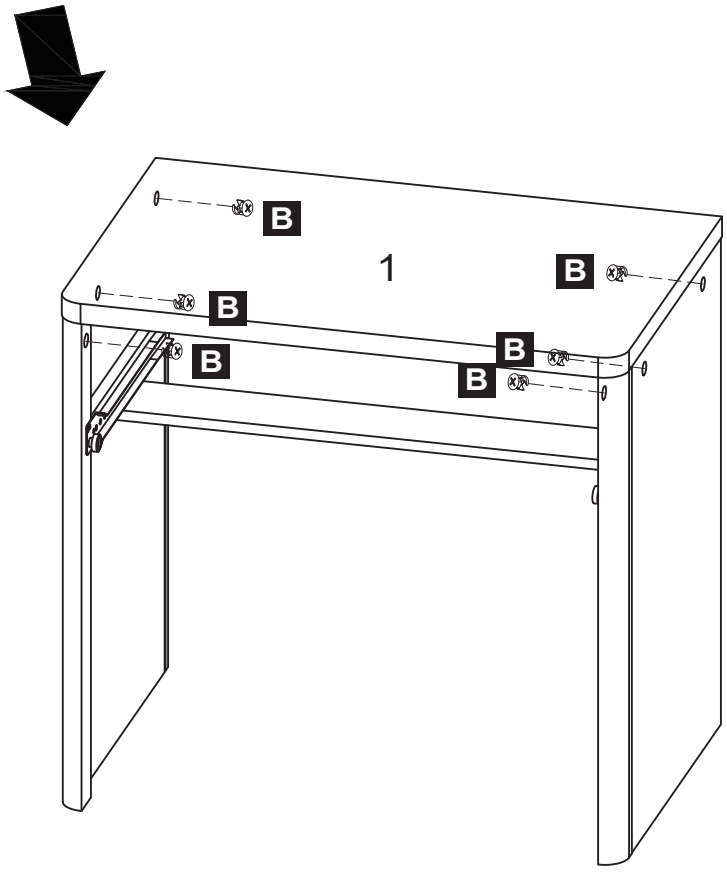

13

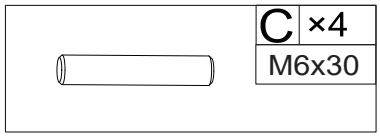

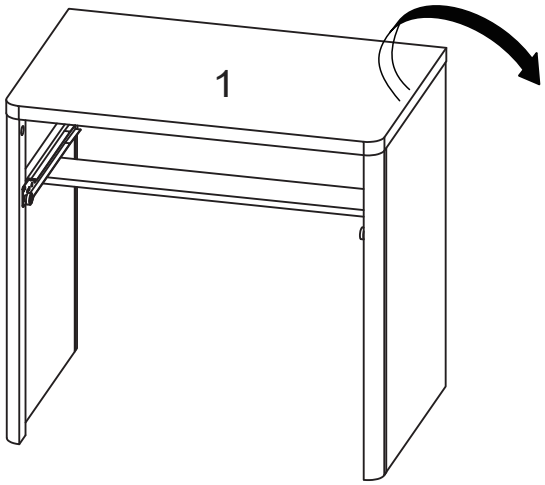

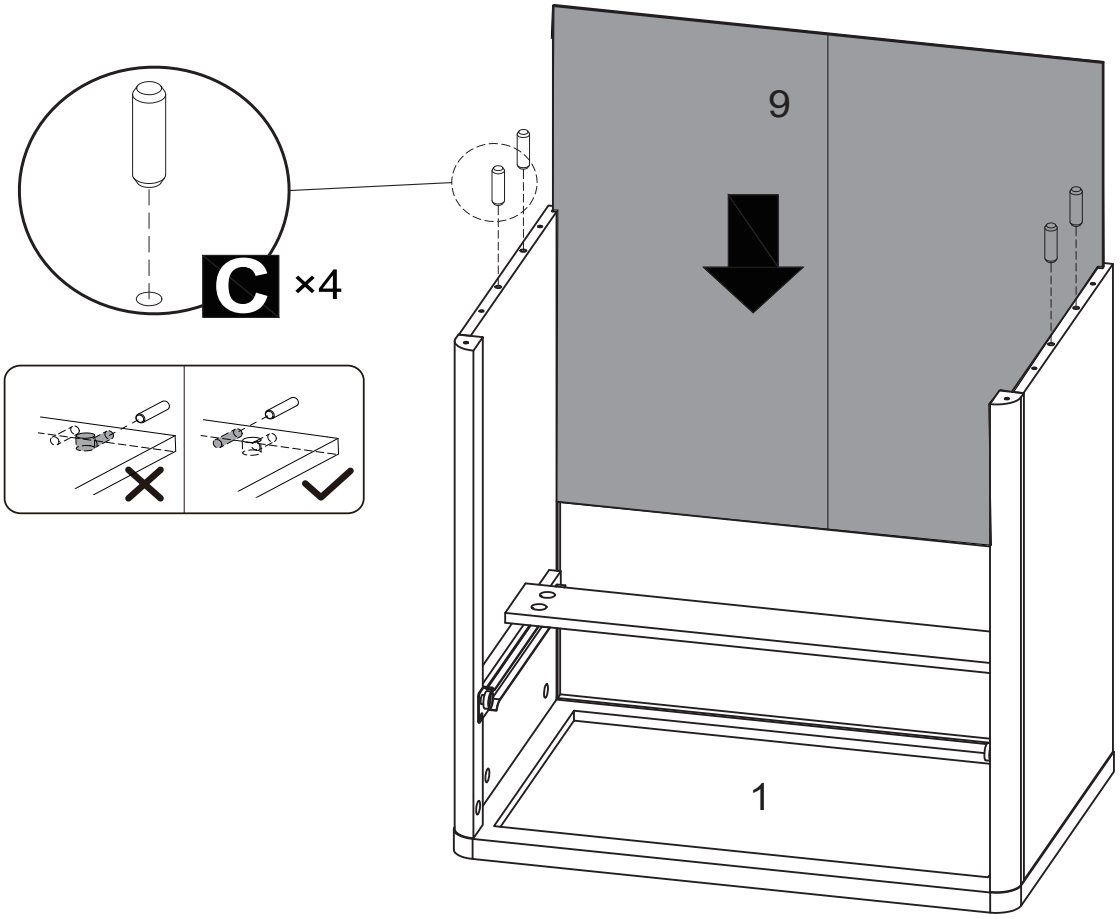

14

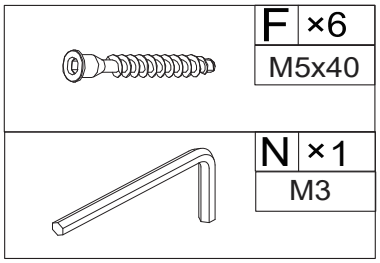

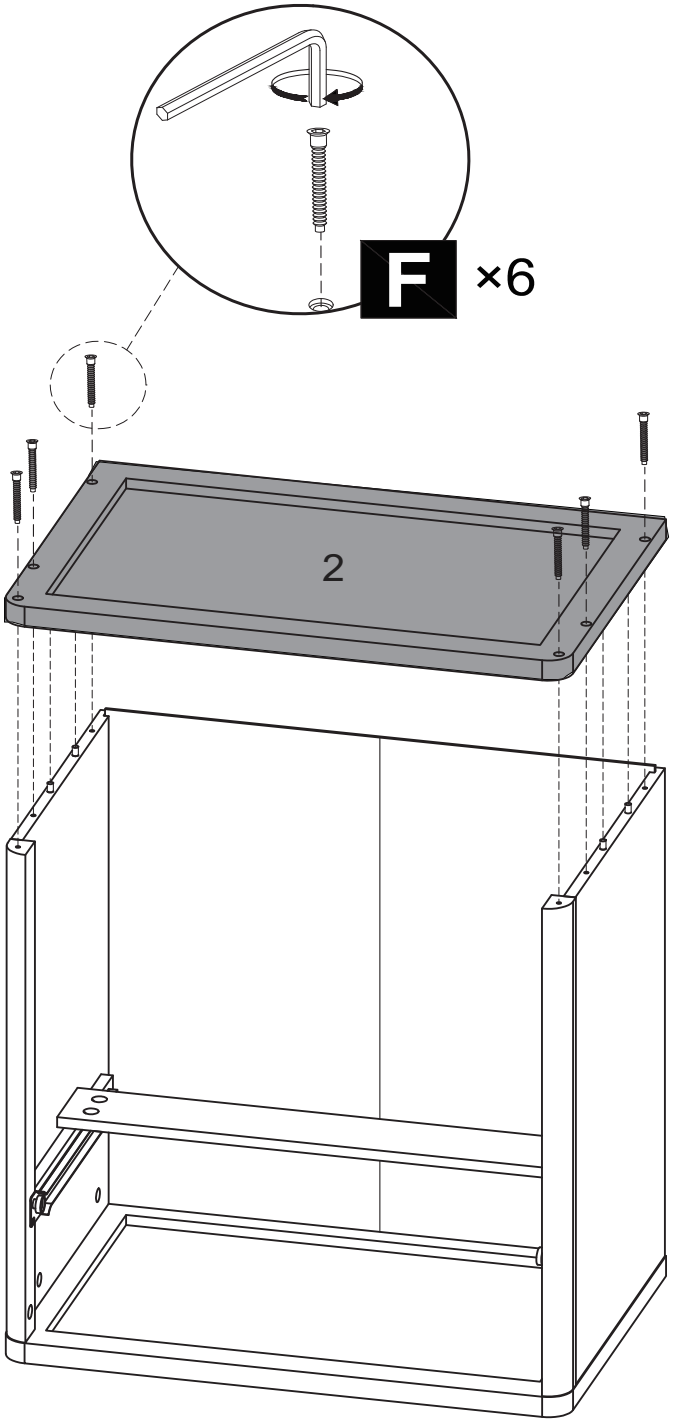

15

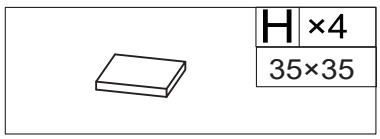

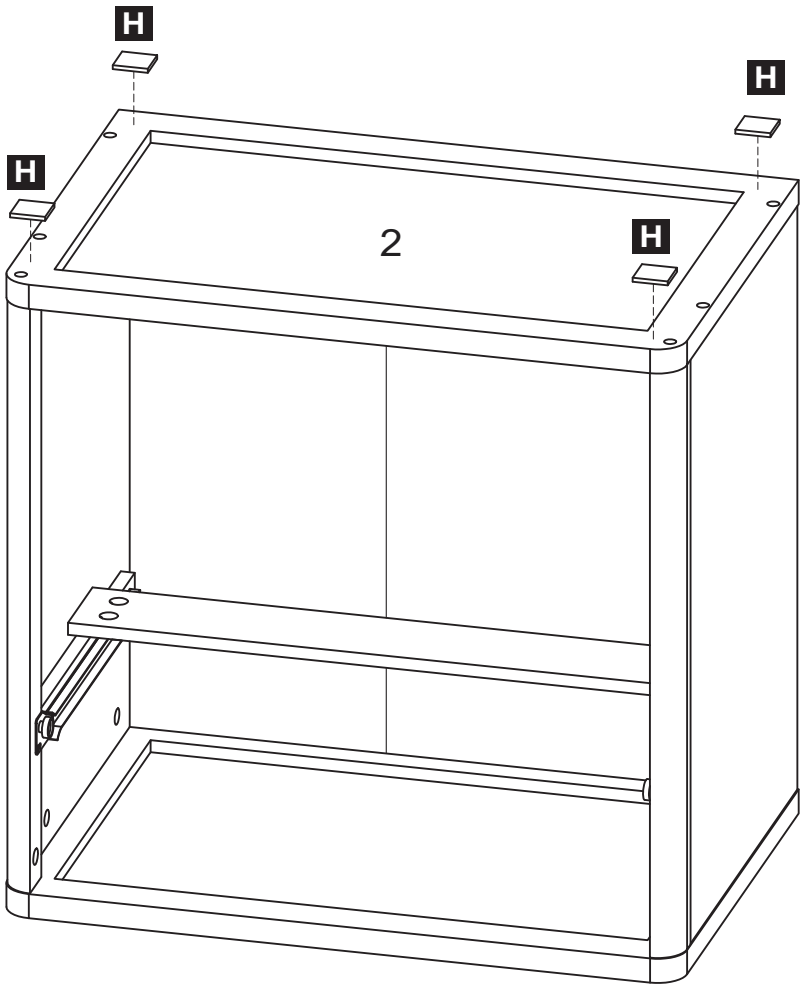

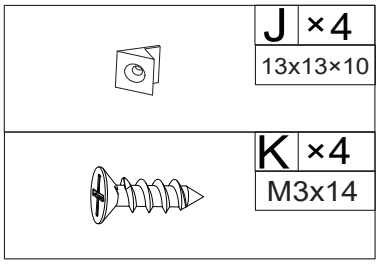
J ×4
13x13×10
K ×4
M3x14

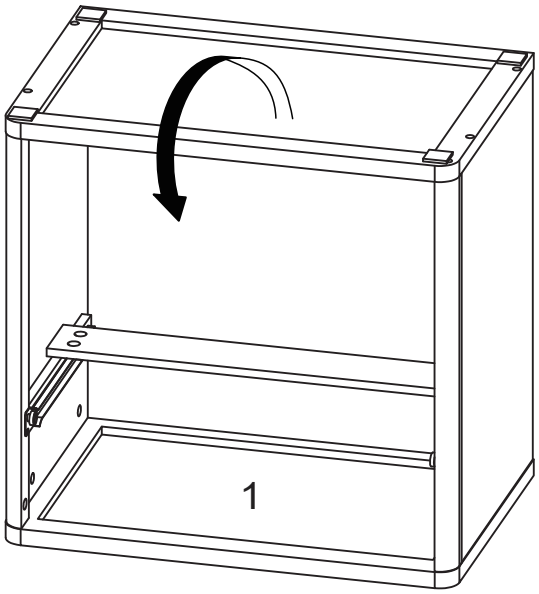
1

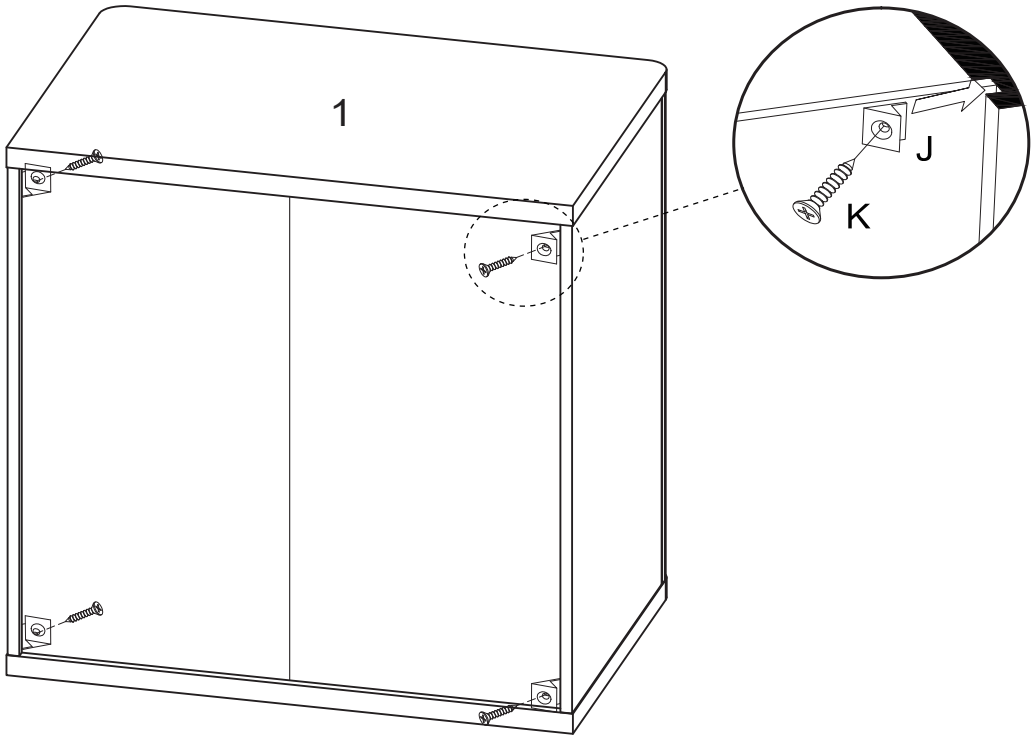
1
J
K

17

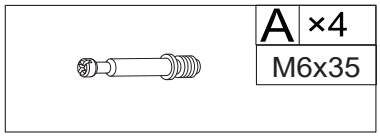

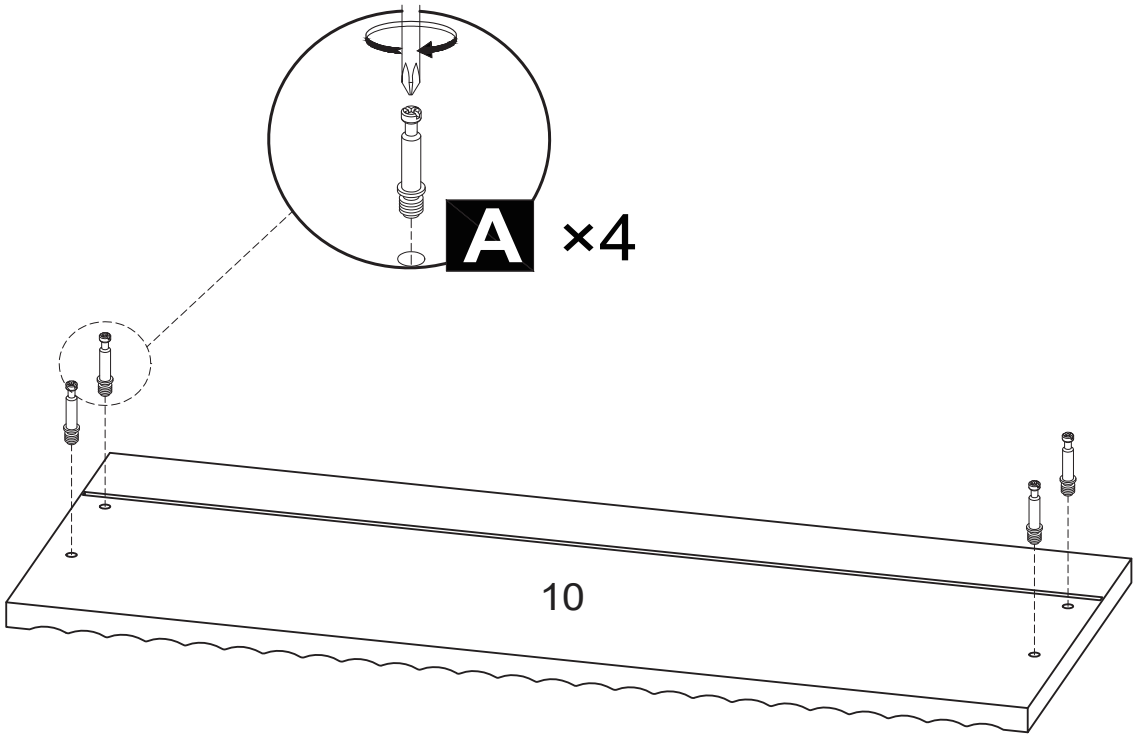

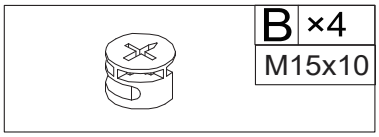
B ×4
M15x10

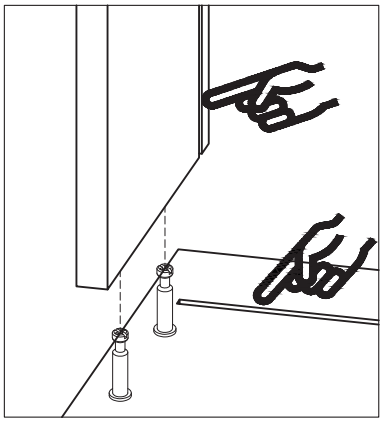

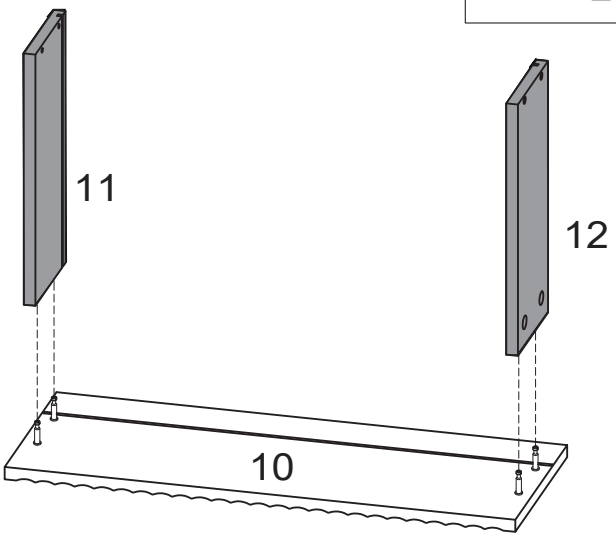
11
12
10

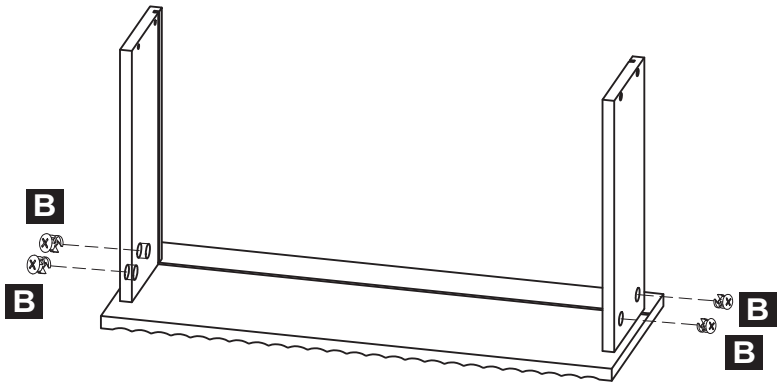
B
B
B
B

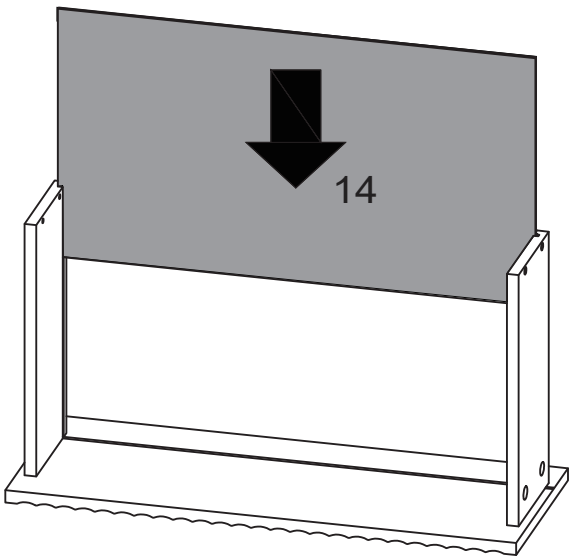
14

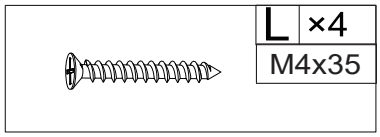
L ×4
M4x35

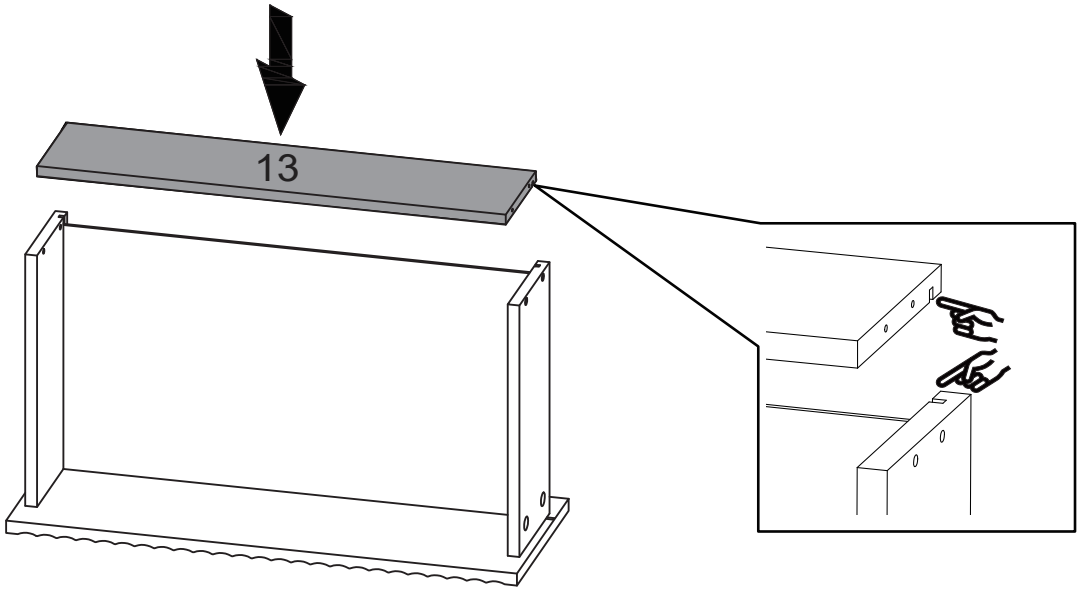
13

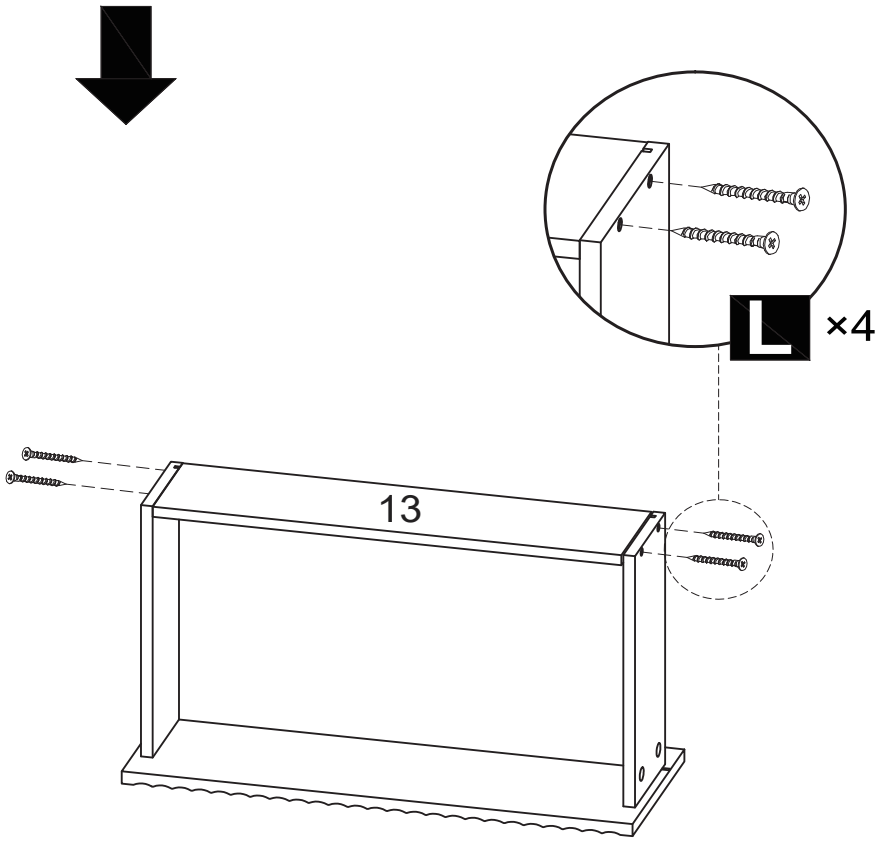
L ×4
13

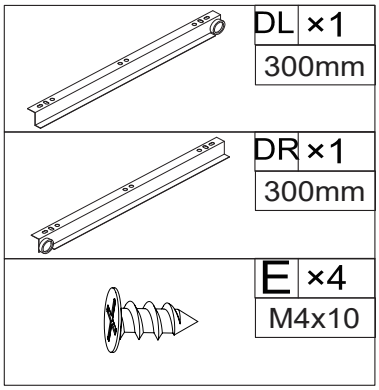
DL ×1
300mm
DR ×1
300mm
E ×4
M4x10

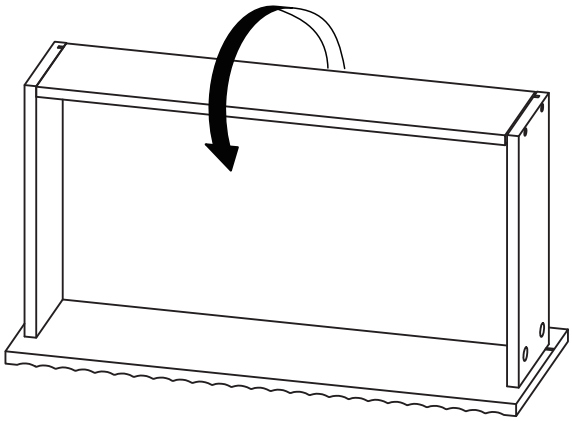

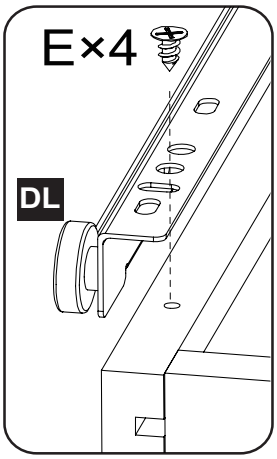
E×4
DL

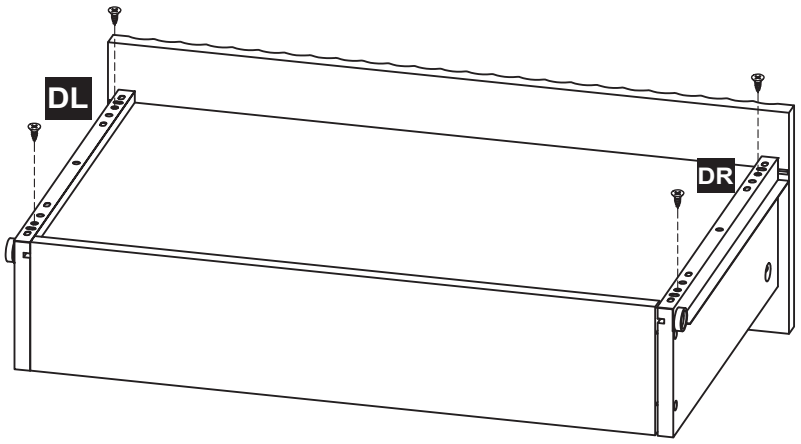
DL
DR

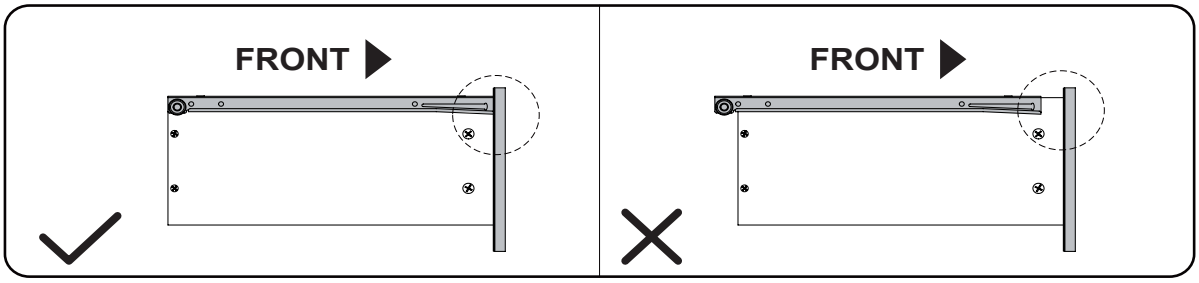
FRONT
FRONT

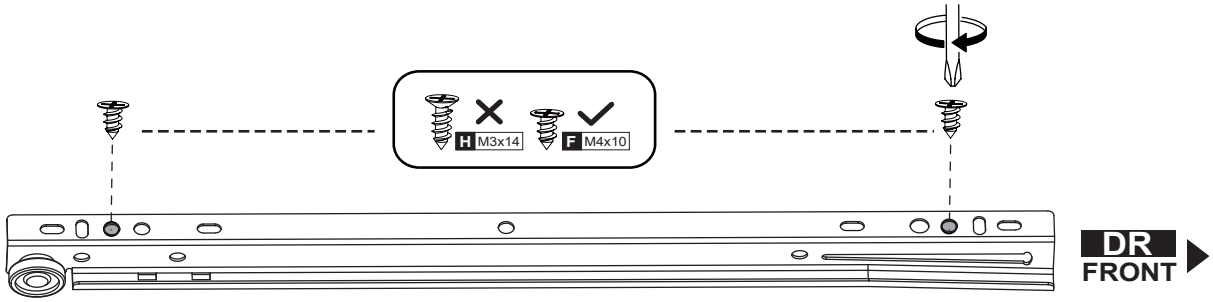
H M3x14
F M4x10
DR
FRONT

21

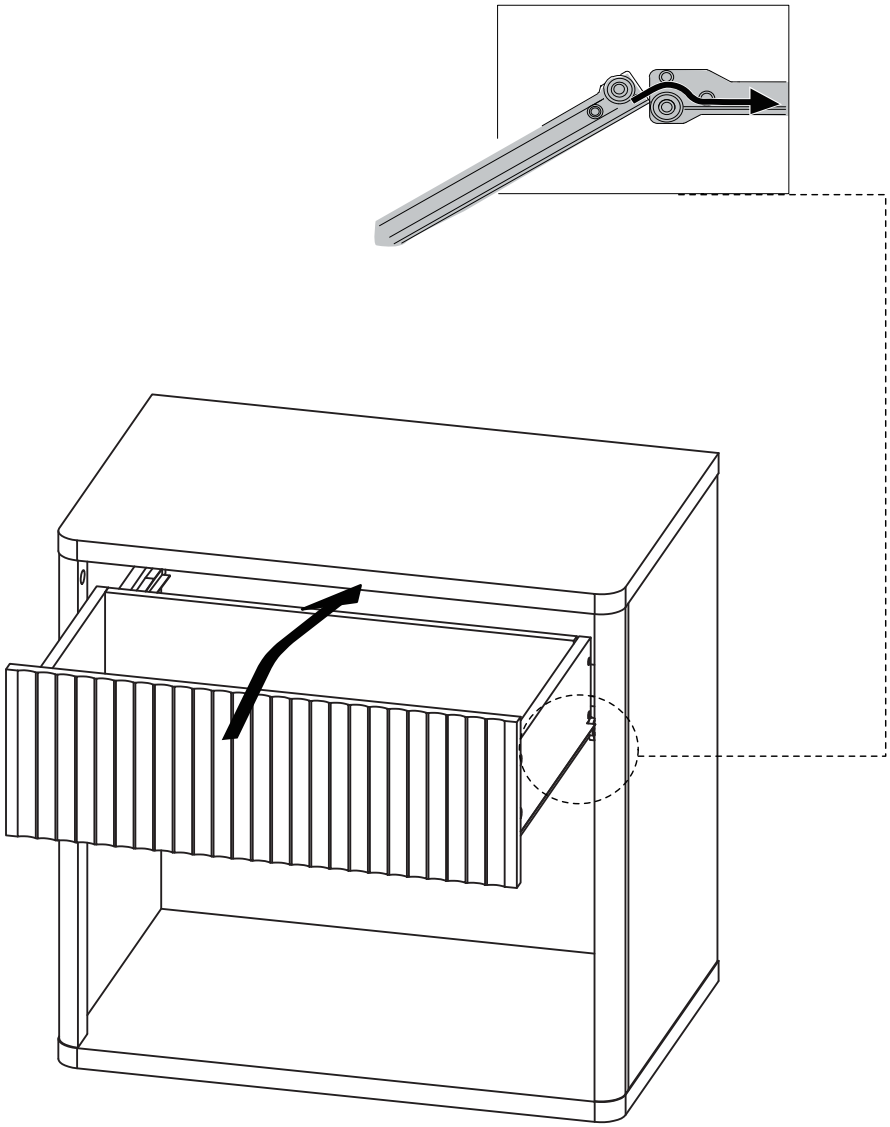

×2