INSTALLATION GUIDE AND USERS MANUAL

Beloak®

Under Cabinet Range Hood

Intertek
5017702

Email for technical help and inquiries: support@beloak.net

TABLE OF CONTENTS

Important Safety Notice..... 1

Electrical Requirements..... 3

Venting Requirements..... 4

Calculating Vent System Length..... 5

Specifications..... 5

Required Tools..... 6

Parts Supplied..... 7

Dimensions..... 9

Preparation..... 11

Rough-In 12

Installation..... 13

Installation (Filters) 18

Venting Methods..... 20

Back Vent Option 21

Wiring Diagram..... 22

Range Hood Operations..... 23

Troubleshooting..... 25

Use and Care Information..... 26

Maintenance..... 27

GU10 Bulb Replacement 28

Warranty..... 29

IMPORTANT SAFETY NOTICE

Read all instructions before installing and operating this appliance

- The installation in this manual is intended for qualified installers, service technicians or persons with similar qualified background. Installation and electrical wiring must be done by qualified professionals and in accordance with all applicable codes and standards, including fire-rated construction.
- DO NOT attempt to install this appliance yourself. Injury could result from installing the unit due to lack of appropriate electrical and technical background.
- Range hood may have very sharp edges; please wear protective gloves if it is necessary to remove any parts for installing, cleaning or servicing.
- Activating any switch ON before completing installation may cause ignition or an explosion.
- Due to the size and weight of this range hood, two-person installation is recommended.

To reduce the risk of fire, electric shock, or injury to persons:

- For general ventilating use only. DO NOT use to exhaust hazardous or explosive materials and vapors.
- The combustion air flow needed for safe operation of fuel-burning equipment may be affected by this unit's operation. Follow the heating equipment manufacturer's guideline and safety standards such as those published by the National Fire Protection Association (NFPA), and the American Society of Heating, Refrigeration and Air Conditioning Engineers (ASHRAE), and the local code authorities.
- Before servicing or cleaning unit, switch power OFF at service panel and lock service panel to prevent power from being switched ON accidentally.
- Clean grease laden surfaces frequently. To reduce the risk of fire and to disperse air properly, make sure to vent air outside. DO NOT vent exhaust into spaces between walls, crawl spaces, ceiling, attics and/or garages.
- Ducted fans MUST always be vented to the outdoors.
- Use only metal ductwork and this unit MUST be grounded.
- Sufficient air is needed for proper combustion and exhausting of gases through the duct to prevent back drafting.
- When cutting or drilling into wall or ceiling, be careful not to damage electrical wiring or other hidden utilities.
- All electrical wiring must be properly installed, insulated and grounded.
- Old duct work should be cleaned or replaced if necessary to avoid the possibility of a grease fire.
- Check all joints on duct work to insure proper connection and all joints should be properly taped.
- Use this unit only in the manner intended by the manufacturer. If you have questions, contact the vendor.

To reduce the risk of a stove top grease fire:

- Keep all fans, spacers, filters, grease tunnels, oil containers and grease-laden surfaces clean. Grease should not be allowed to accumulate on fan, baffle, spaces, filter, grease tunnel and oil container.
- Always turn range hood ON when cooking at high heat or when cooking foods that produce flames.
- Use high settings on cooking range only when necessary.
- Never leave surface units unattended at high settings. Boil overs cause smoking and greasy spillovers that may ignite. Heat oils slowly on low or medium settings.

IMPORTANT SAFETY NOTICE

Read all instructions before installing and operating this appliance

- Clean ventilating fan frequently.
- Always use appropriate cookware and utensils size.
- Always use cookware appropriate for the size of the surface element.

To reduce the risk of injury to persons in the event of a stove top grease fire:

- Smother flames with a close-fitting lid, cookie sheet, or metal tray, then turn OFF the burner. Be careful to PREVENT BURNS. Never pick up a pan that has flames—you may be burned. Keep flammable and/or combustible material away from flames. If the flames DO NOT go out immediately, EVACUATE and CALL the FIRE DEPARTMENT or dial your local emergency service immediately.
- DO NOT use WATER, including wet dishcloths or towels — it will result in a violent steam explosion
- Use an extinguisher ONLY if:
  - You know you have a Class A, B, C extinguisher, and you already know how to operate it.
  - The fire is small and contained in the area where it has started.
  - The fire department is on the way.
  - You can fight the fire while having access to a safe exit.

To reduce the risk of injury to persons in the event of a gas leaks:

- Extinguish any open flame.
- DO NOT turn on the range hood fan or any type of ventilator.
- DO NOT turn on the lights or any type of appliance.
- Open all doors and windows to disperse the gas. If you still smell gas, call the gas company and fire department or dial your local emergency service immediately.

Your safety and the safety of others is very important. We have provided many important safety messages in this manual and on your appliance. Always read and obey all safety messages. All safety messages will tell you what the potential hazard is, tell you how to reduce the chance of injury, and tell you what can happen if the instructions are not followed.



This is the safety alert symbol. This symbol alerts you to potential hazards that can hurt you and others. All safety messages will follow the safety alert symbol and the word “WARNING”.

The manufacturer and/or distributor/reseller declines all responsibility in the event of failure to observe the instructions given here for installation, maintenance and suitable use of the product.

The manufacturer and/or distributor/reseller further declines all responsibility for injury due to negligence and the warranty of the unit automatically expires due to improper maintenance.

The manufacturer and/or distributor/reseller will not be held responsible for any damages to personal property or real estate or any bodily injuries whether caused directly or indirectly by the range hood.

ELECTRICAL REQUIREMENTS

IMPORTANT: Observe all governing codes and ordinances.

It is the customer's responsibility:

- To contact a qualified electrician
- To assure that the electrical installation is adequate and in conformance with National Electrical Code and all local codes and ordinances.

If codes permit and a separate ground wire is used, it is recommended that a qualified electrician determine that the ground path is adequate.
A 110/120-Volt, 60 Hz, AC-only, fused electrical supply is required on a separate 15-amp circuit.
DO NOT ground to a gas pipe.
Check with a qualified electrician if you are not sure that the range hood is properly grounded.
DO NOT have a fuse in the neutral or ground circuit.

IMPORTANT: Save this Installation Guide for electrical inspector's use.

The range hood must be connected with copper wire/plug only.
The range hood should be connected directly to the fused disconnect (or circuit breaker) box through flexible armored or non-metallic sheathed copper cable. A U.L. - or C.S.A. - listed strain relief must be provided at each end of the power supply cable.

Wire sizes (copper wire only) and connections must conform with the rating of the appliance as specified on the model/serial rating label. Wire sizes must conform to the requirements of the National Electrical Code ANSI/NFPA 70 — latest edition*, or CSA Standards C22.

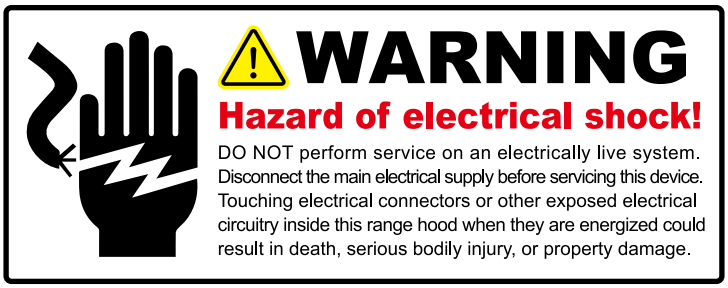

VENTING REQUIREMENTS

- Vent system must terminate to the outside (roof or side wall).
- DO NOT terminate the vent system in an attic or other enclosed area.
- DO NOT use 4” (10.2 cm) laundry-type wall caps.
- Use metal/aluminum vent only. Rigid metal/aluminum vent is recommended.
- DO NOT use plastic vent.
- Always keep the duct clean to ensure proper airflow.
- Calculate the following figures before installation:
  1. *Distance from the floor to the ceiling.*
  2. *Distance between the floor to the countertop/stove.*
  3. *Distance between the countertop/stove to the range hood.*
  4. *Height of hood and duct cover.*

For the most efficient & quiet operation:

- A distance of 24” to 30” is recommended between stove top and the bottom of range hood (30” min for 9’ ceilings)
- It is recommended that the range hood be vented vertically through the roof through 6” or bigger round metal/aluminum vent work.
- The size of the vent should be uniform.
- Use no more than three 90° elbows.
- Make sure there is a minimum of 24” (61 cm) of straight vent between the elbows if more than one elbow is used.
- DO NOT install two elbows together.
- The length of vent system and number of elbows should be kept to a minimum to provide efficient performance.
- The vent system must have a damper. If roof or wall cap has a damper, DO NOT use damper (if supplied) on top of the range hood.
- Use aluminum tape to seal all joints in the vent system.
- Use caulking to seal exterior wall or roof opening around the cap.

IMPORTANT:

- A minimum of a 6” round duct (standard for this range hood) must be used to maintain maximum airflow efficiency.
- Always use rigid type metal/aluminum ducts if available to maximize airflow when connecting to provided duct.
- Please use Duct Run Calculation below to compute total available duct run when using elbows, transitions and caps.
- ALWAYS, when possible, reduce the number or transitions and turns in the duct run. If a long duct run is required, increase the duct size from 6” to 8”. If a reducer is used, install a long reducer instead of a pancake reducer. Reducing the duct size will restrict airflow and decrease efficiency.
- If turns or transitions are required: Install as far away from opening and as far apart, between 2, as possible.
- Minimum mount height between stove top to hood bottom should be no less than 24-inch*.
- Maximum mount height between stove top to hood bottom should be no higher than 30-inch*.
- It is important to install the hood at the proper mounting height. Hoods mounted too low could result in heat damage and fire hazard; while hoods mounted too high will be hard to reach and will loose its performance and efficiency.
- If available, also refer to stove top manufacturer’s height clearance requirements and recommended hood mounting height above range.

Minimum Duct Size:

- Round - 6” minimum

** Due to different ceiling height configurations, recommended height may not be applicable.*

CALCULATING VENT SYSTEM LENGTH

To calculate the length of the duct system you require, subtract the equivalent feet for each “Vent piece” (Table Below) used in the system from the “Recommended maximum run” (Table Below). The longest duct run that is acceptable (if completely straight) is 50 feet. The number of vent pieces (elbow, transition, etc.) installed in your duct run will determine the maximum length the duct run can be. Please refer to the example below:

Duct Run Calculation:	
	Recommended maximum run
6” round duct	50 ft
	Vent piece deduction
Each 90º elbow used	9 ft
Each 45º elbow used	5 ft
Each 6” to 3/14 x 10” transition used	7 ft
Side wall cap with damper	7 ft
Roof cap	7 ft

Duct Run Calcuation example:

One roof cap, two 90º elbows, and one 45º elbow used:

7ft + 9ft + 9ft + 5ft = 30ft used.

The above vent pieces used are equivalent to 30ft of a straight duct run. Subtract 30ft from the allowable 50ft. The remaining distance of 20ft is the longest that the straight ducting (in addition to the vent pieces) can be.

SPECIFICATIONS*

Finish	Stainless Steel & Galvanized Metal
Power Rating	120V / 60Hz (USA & Canada Standard)
General Input Power	256W
Motor Revolution	800 RPM (±10%) to 1300 RPM (±10%)
Number of Motors	2
Blower Type	Centrifugal Blower
Speed Level	4-Speed
Power Connection Type	Plug-in Wire (120V)
Control Type	Soft Touch, M
Air Presure	150 Pa (200 Pa Maximum)
Filter	Dishwasher-safe Stainless Steel Baffle Filter
Illumination	GU10 2Wx2pcs (4000K)
Venting Size	Top 6" Round, Top or Back 9.85" x 3.15" Rectangular

REQUIRED TOOLS

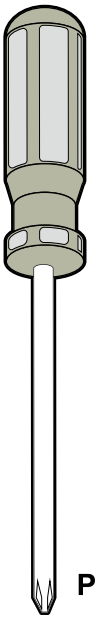

Phillips Screwdriver

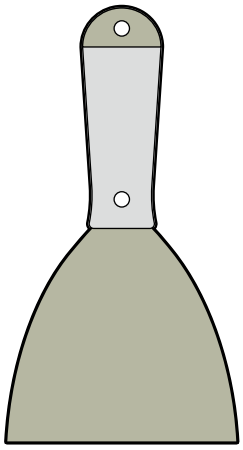

Putty Knife

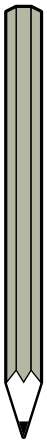

Marker or Pencil

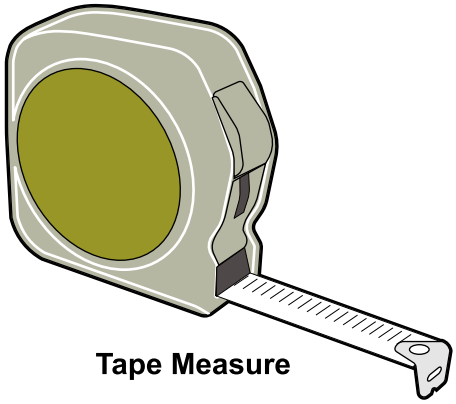

Tape Measure

Level

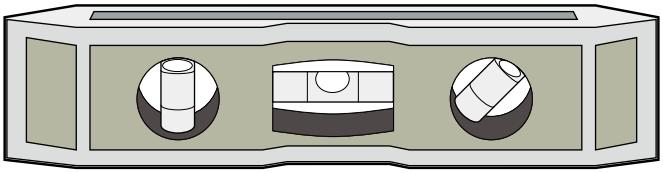

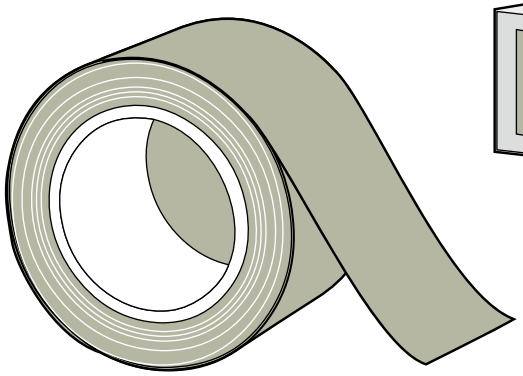

Aluminum Tape

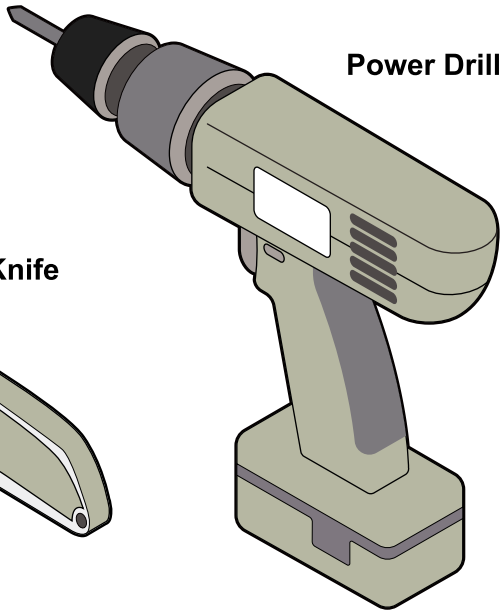

Power Drill

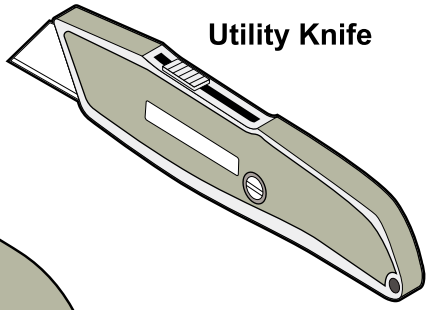

Utility Knife

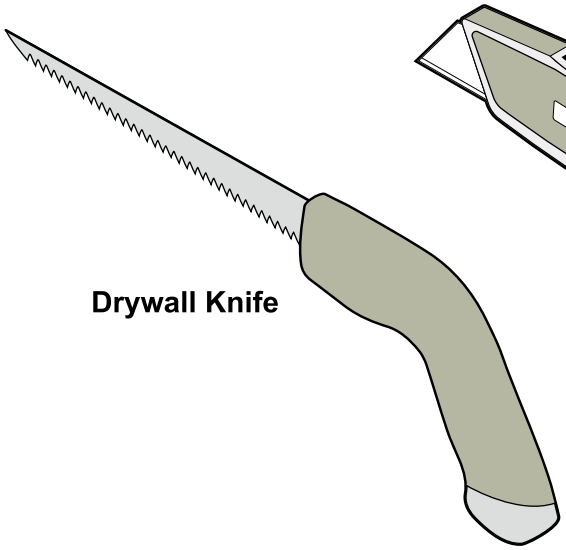

Drywall Knife

PARTS SUPPLIED

GUD11-30, 36 & 42
GUD12-30, 36 & 42

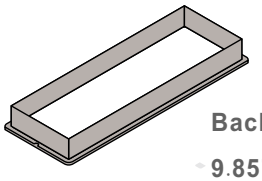

Back Rectangular Adapter

9.85" x 3.15"

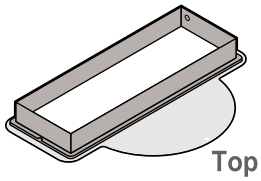

Top Rectangular Adapter

9.85" x 3.15"

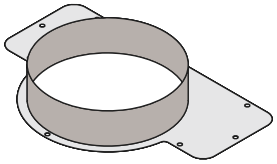

6" Top Round Adapter

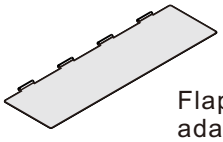

Flap for rectangular adapters x2pcs

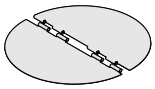

Flap for round adapter

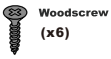





***PLEASE NOTE:**

Installing the Flaps is **not recommended** when using a mesh screen or damper-equipped wall/roof cap at the exterior outlet.



Remote Control
(2 AAA batteries required)



Aluminum Flexible Duct

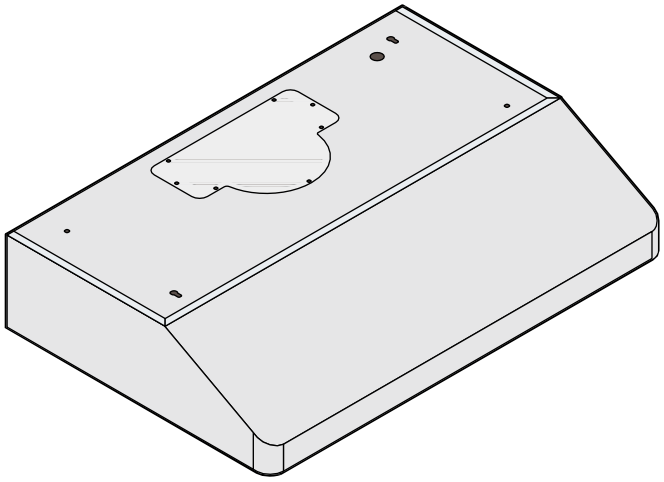

Range Hood Body

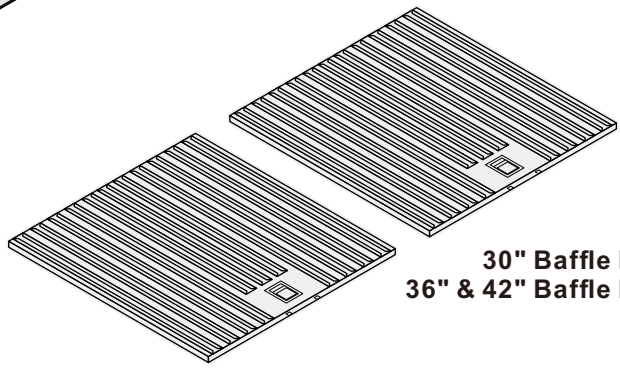

30" Baffle Filters (x2)
36" & 42" Baffle Filters (x3)

NOTE:

Where necessary, additional screws will be needed for installation and added support, but is not included. Please review contents before installation.

PARTS SUPPLIED

GUD10-30, 36 & 42

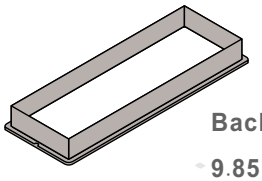

Back Rectangular Adapter

9.85" x 3.15"

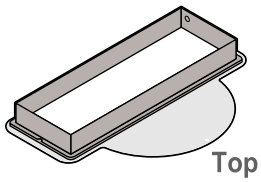

Top Rectangular Adapter

9.85" x 3.15"

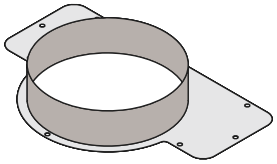

6" Top Round Adapter

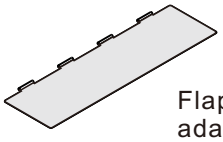

Flap for rectangular adapters x2pcs

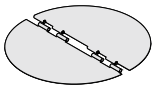

Flap for round adapter

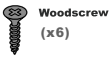

Woodscrew (x6)



Anchor Screw (x6)

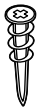

Self-Drilling Plastic Drywall Anchor (x6)

***PLEASE NOTE:**

Installing the Flaps is **not recommended** when using a mesh screen or damper-equipped wall/roof cap at the exterior outlet.



Remote Control (2 AAA batteries required)



Aluminum Flexible Duct

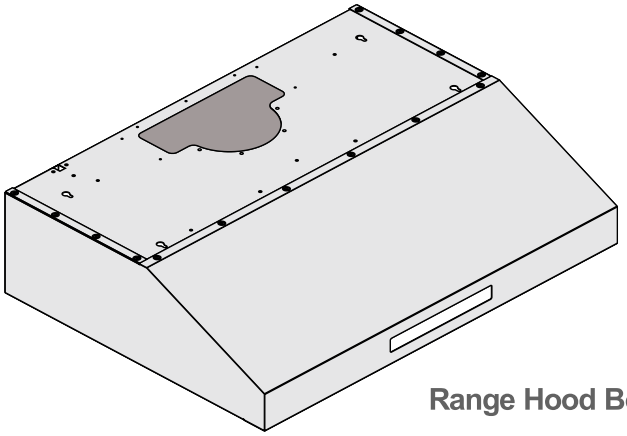

Range Hood Body

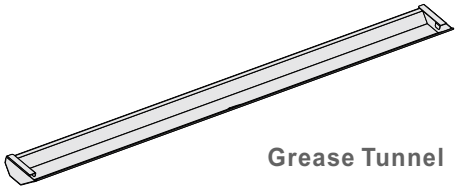

Grease Tunnel

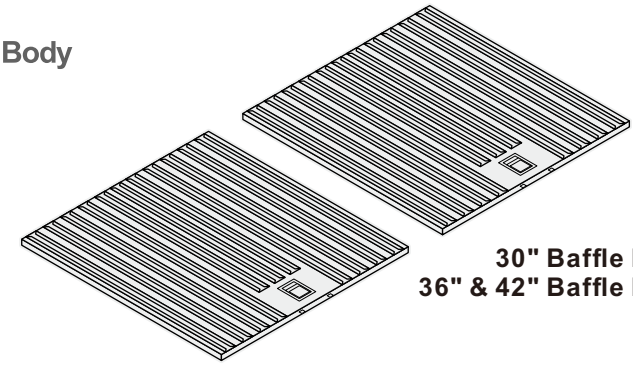

30" Baffle Filters (x2)
36" & 42" Baffle Filters (x3)

NOTE:

Where necessary, additional screws will be needed for installation and added support, but is not included. Please review contents before installation.

DIMENSIONS

GUD11-30, 36 & 42
GUD12-30, 36 & 42

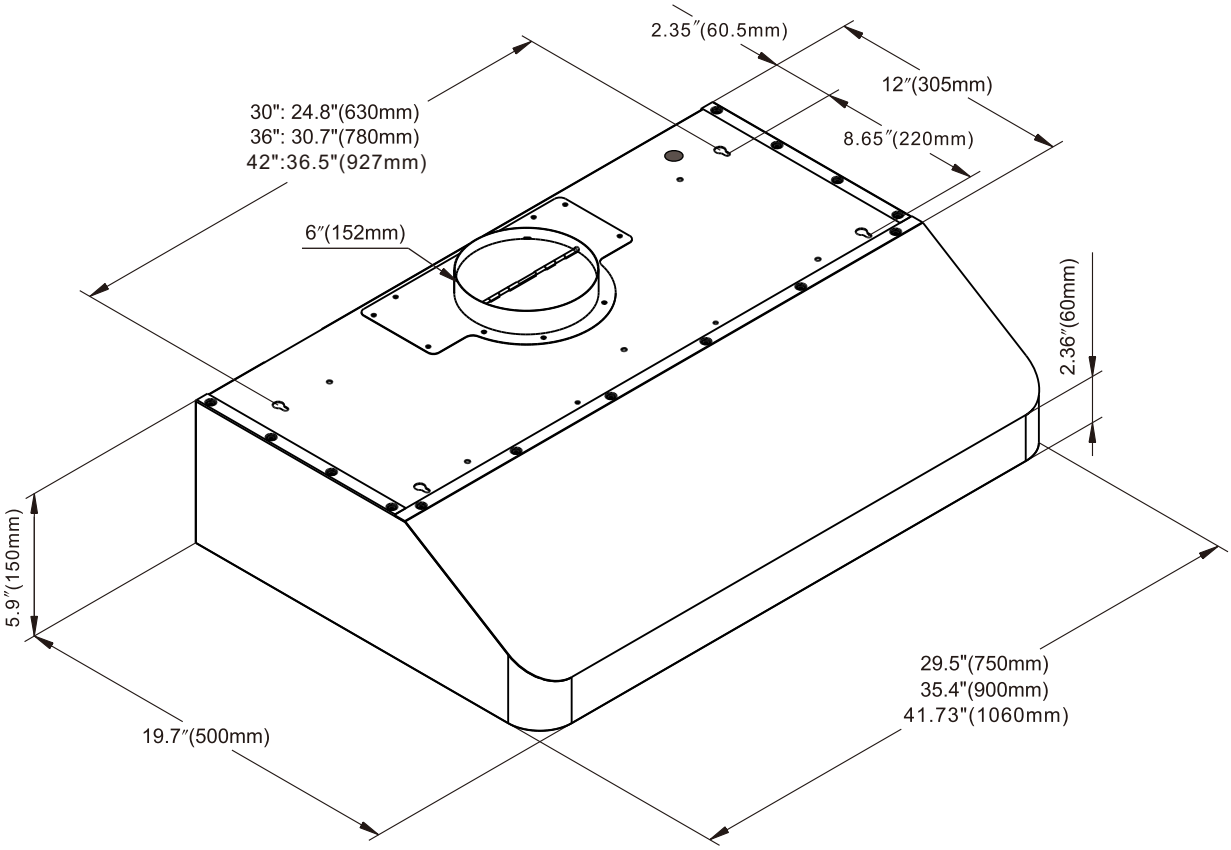

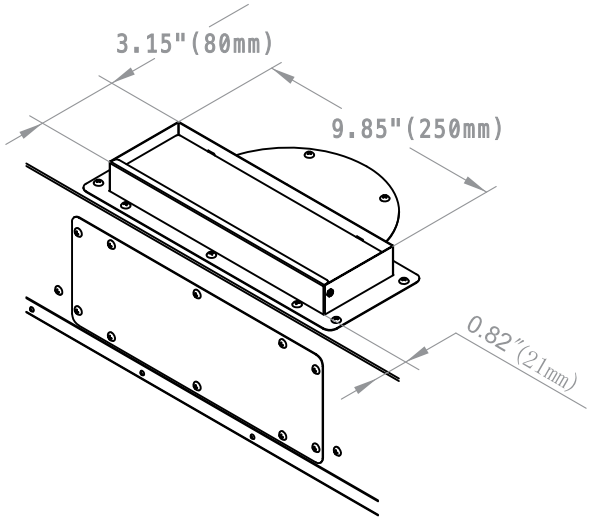

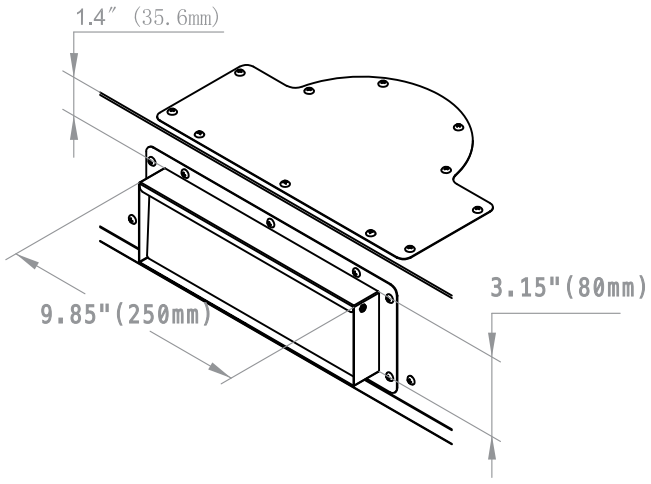

DIMENSIONS

GUD10-30, 36 & 42

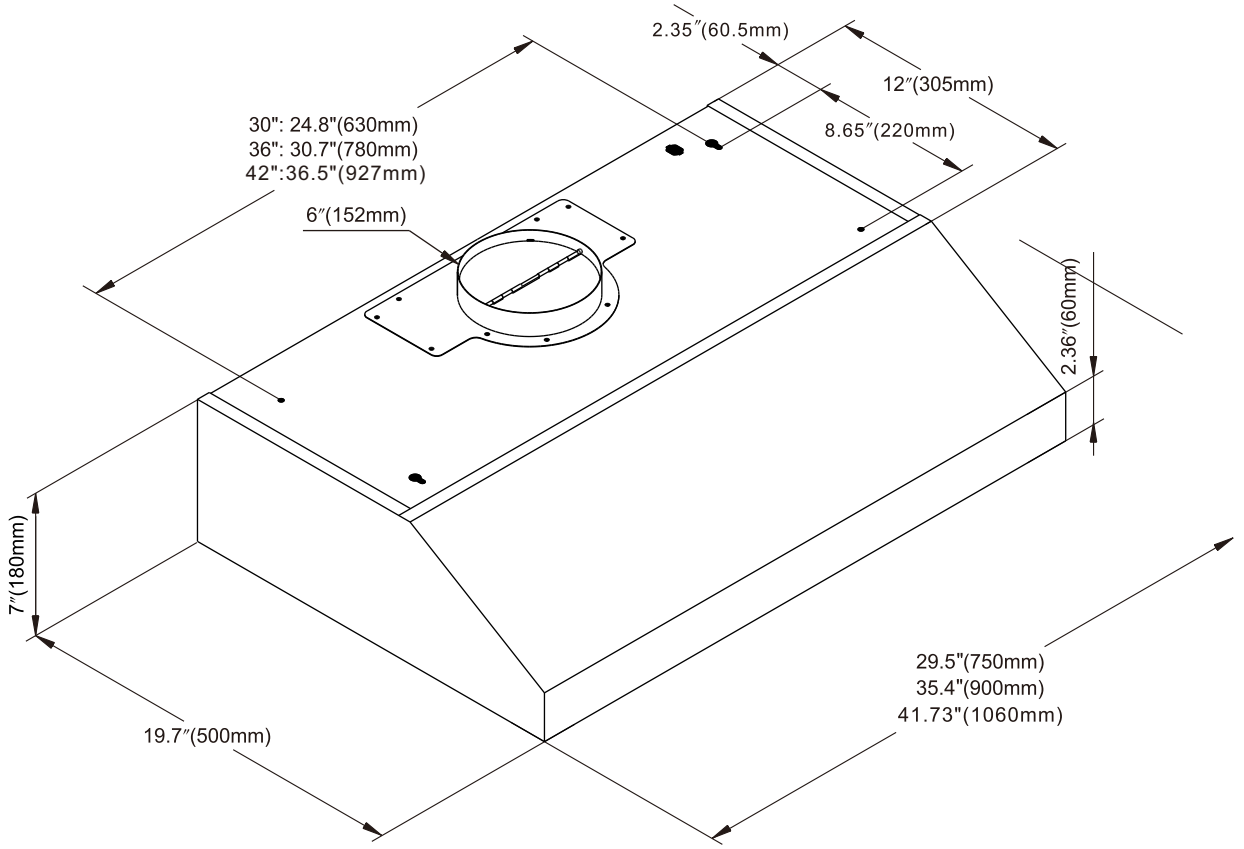

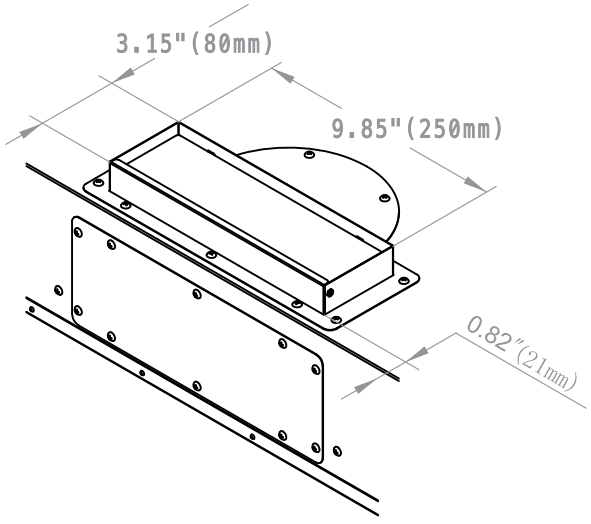

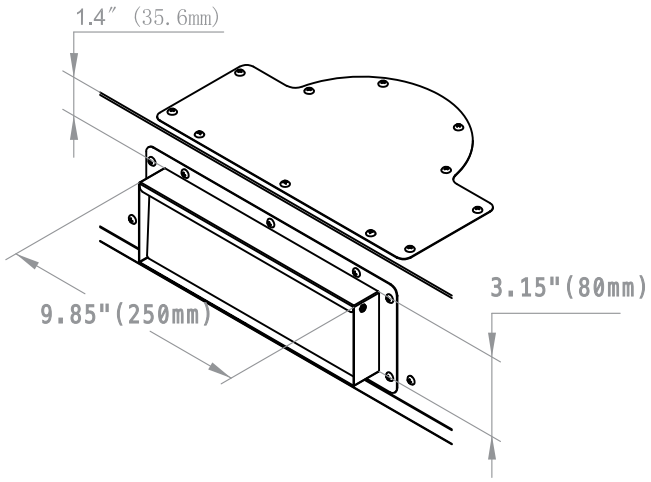

PREPARATION

⚠ WARNING

Severe Injury

Hood may have very sharp edges. Please wear protective gloves if it is necessary to remove any parts for installing, cleaning or servicing.

⚠ WARNING

Excessive Weight

Require three or more persons to move and install this range hood. Spinal or other bodily injuries could occur if it is not followed.

THE HOOD MUST BE TESTED BEFORE INSTALLATION.

If there is a grinding noise coming from the motor, **DO NOT INSTALL IT**, contact us as soon as possible.

Advanced Preparations:

- Be familiar with the controls of the range hood by reading through Range Hood Operations.
- Place the range hood on a flat, stable surface. Connect the range hood to a designated standard outlet (please refer the product label for the suitable voltage of this unit) and turn on the range hood. Verify all operations of the range hood by referring to Range Hood Operations. Place all supplied parts and required hardware on a flat, stable surface and verify the existence of all supplied parts.
- Carefully remove the white or grey plastic protective coat from the range hood.

Preparations:

NOTE: To avoid damage to your hood, prevent debris from entering the vent opening.

- Decide the location of the venting pipe from the hood to the outside. Refer to Venting Methods.
- A straight, short vent run will allow the hood to perform more efficiently.
- Try to avoid as many transitions, elbows, and long run as possible. This may reduce the performance of the hood.
- Using 45 degee elbows is better than using 90 degree elbows.
- IMPORTANT: Peel white plastic protective coat off the hood, if any.
- Use aluminum tape to seal joints between pipe sections.

BELOAK will not be responsible for additional labor costs related to reinstallation of the range hood due to transportation internal damage or wiring issues.

Be sure to scan the QR code to watch the installation video before installation

ROUGH-IN

FRONT VIEW

(1) Measure the distance between the stove top and the bottom of range hood. A distance of 24” to 30” is recommended*.

**Due to different ceiling height configurations, recommended height may not be applicable.*

Preferred areas to install wall or roof vent ducting.

Wall or roof vent may be installed in these areas but not recommended.

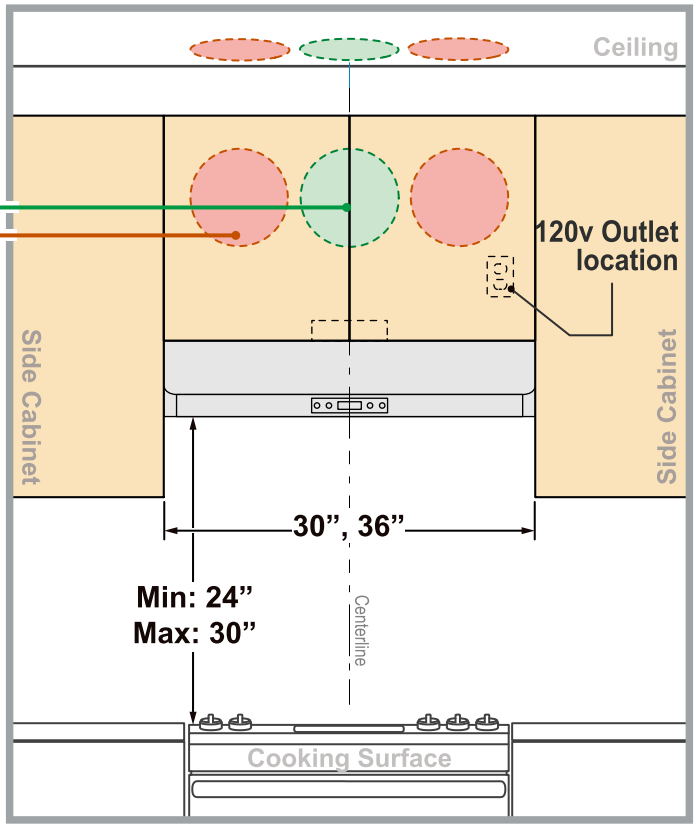

(2) **For optimal performance, we strongly recommend using the top round outlet configuration.**

(3) Installing the Flaps of Top & Back Rectangular Adapter is **not recommended** when using a mesh screen or damper-equipped wall/roof vent cap at the exterior outlet. It reduces suction and creates extra noise. Scan the QR code for the installation video if you still wish to proceed.

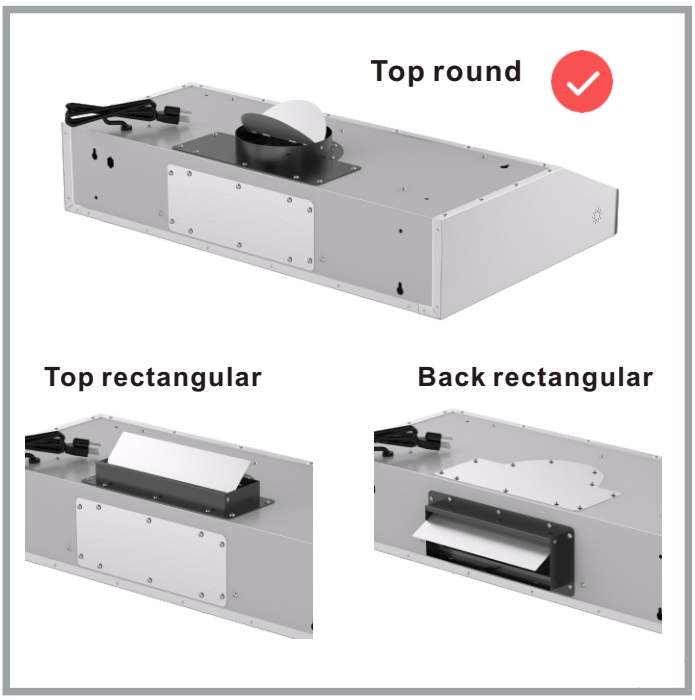

OPTION 1: Round Transition

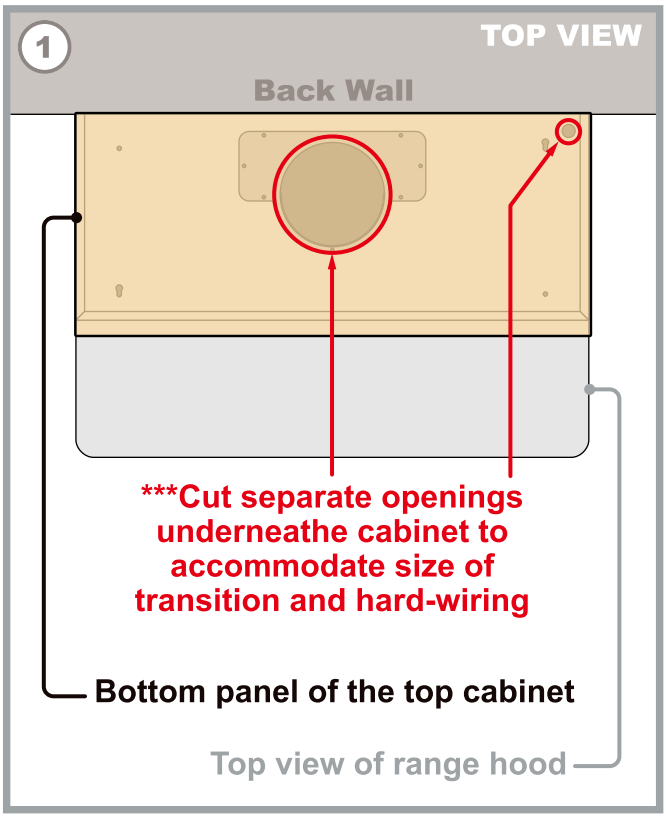

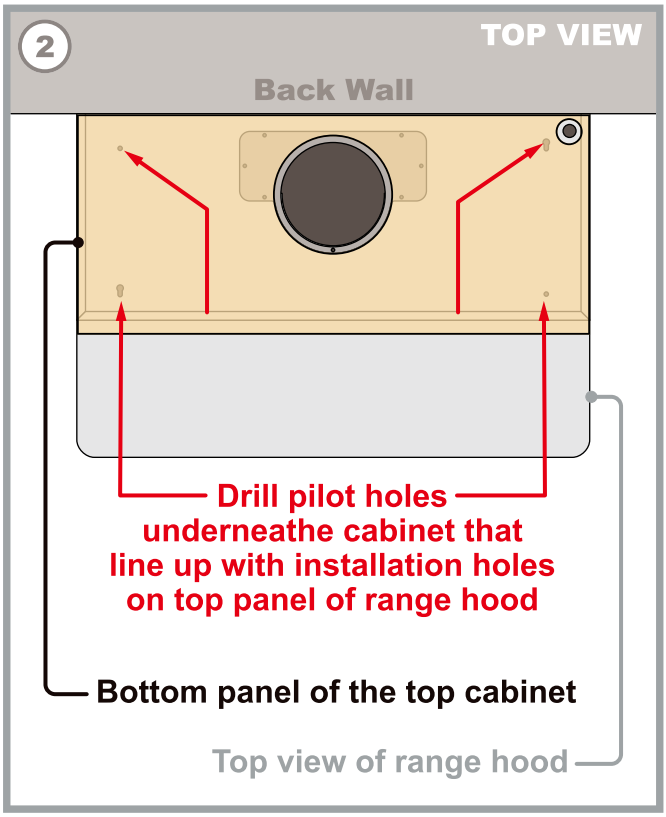

***Ensure you have ⅛" space from wall to your cut out to accommodate size of connector for ducting.*

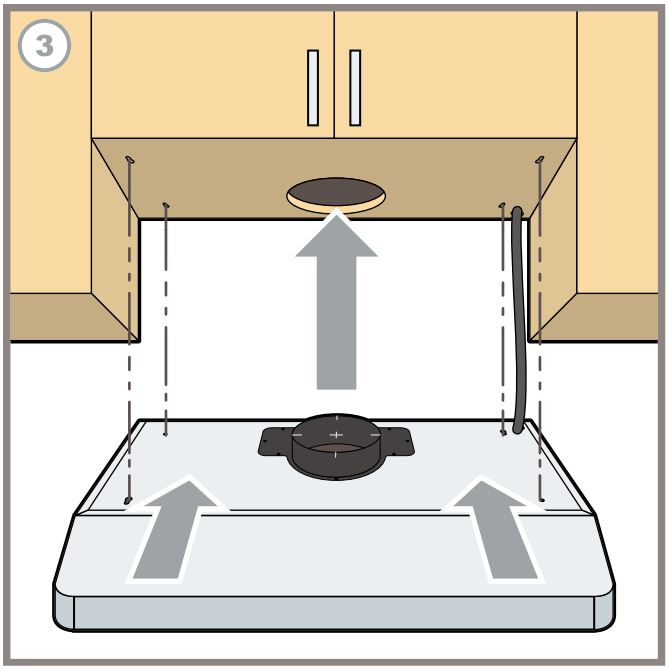

(3) Lift and insert the range hood underneathe the cabinet. Ensure the wiring passes through the opening created below the cabinet.

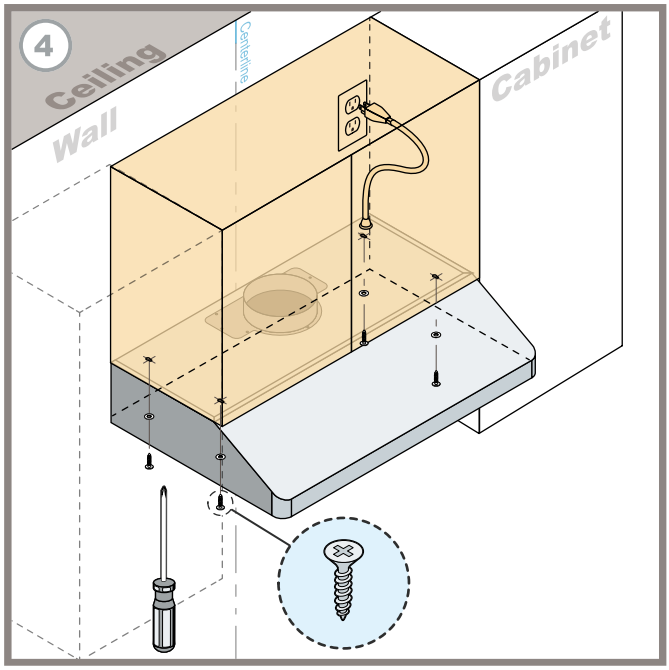

(4) Secure with 4 woodscrews from the inner side of the range hood.

CAUTION: Make certain the range hood is secure before releasing!

OPTION 1 (continued)

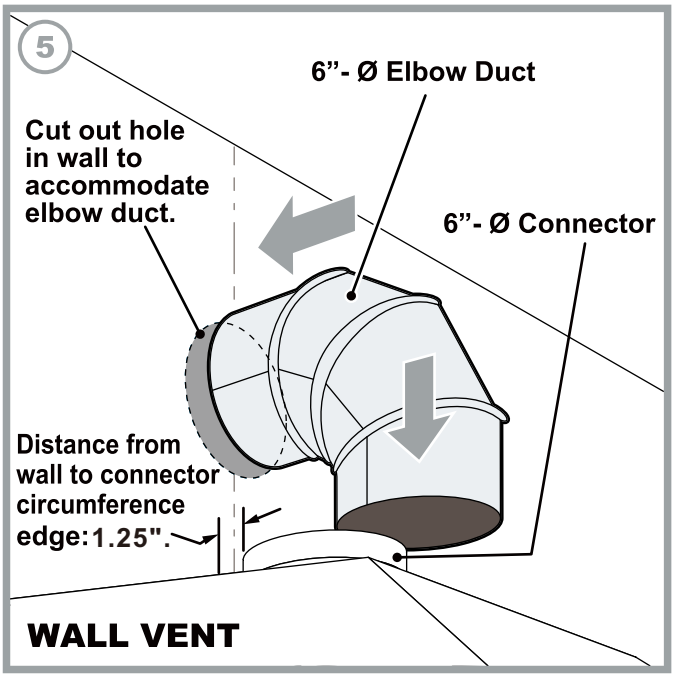

Distance from wall to transition circumference edge for 6” - Ø Transition will be 1.25".

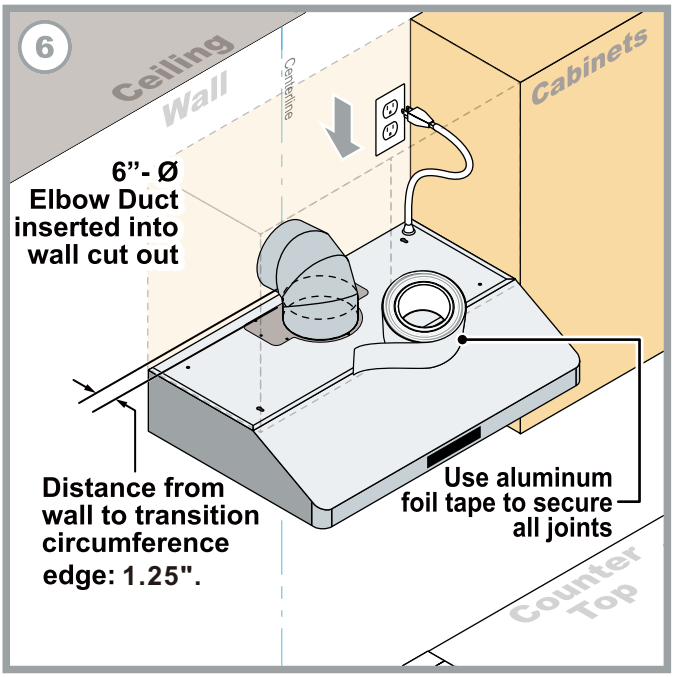

Use aluminum foil tape to make all joints secure and air tight.

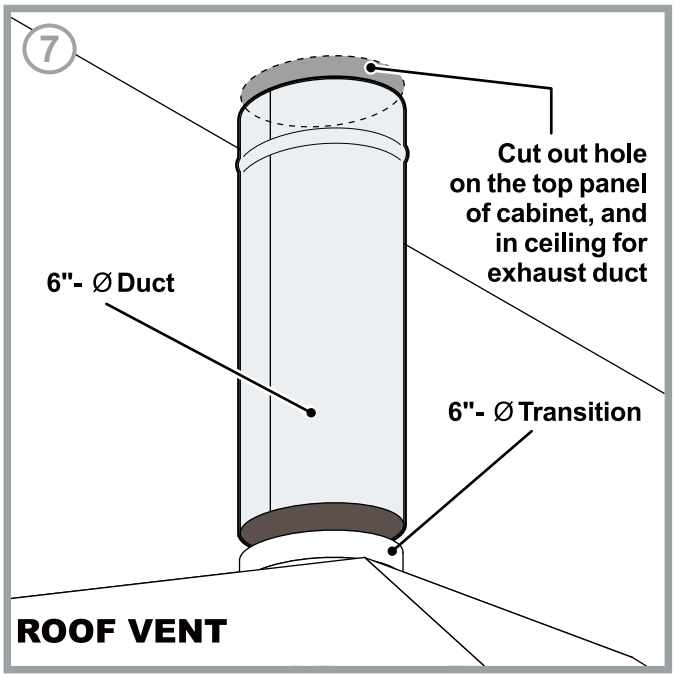

Use flexible duct/steel pipe to connect the exhaust on the hood to the ductwork above. Use aluminum foil tape to make all joints secure and air tight.

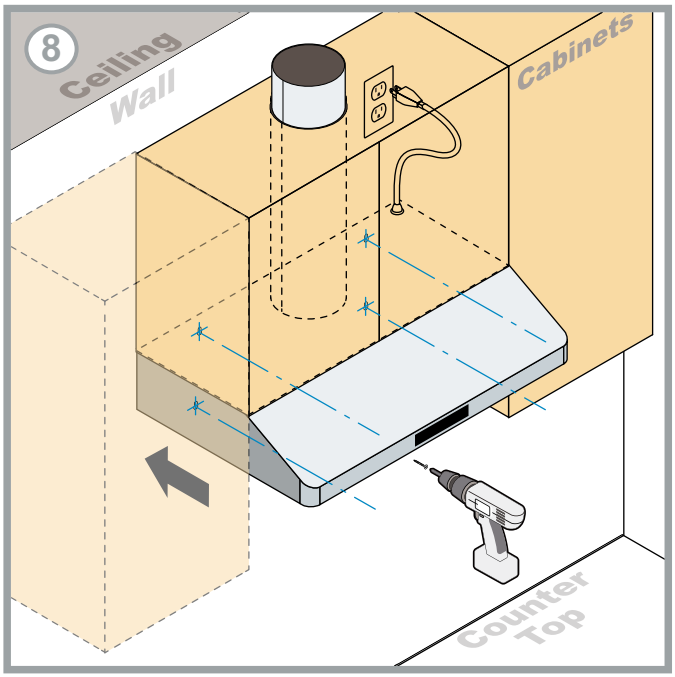

Optional: secure the range hood to the wall through the rear mounting holes using additional screws for added stability.

OPTION 2: Rectangular Exhaust Connector

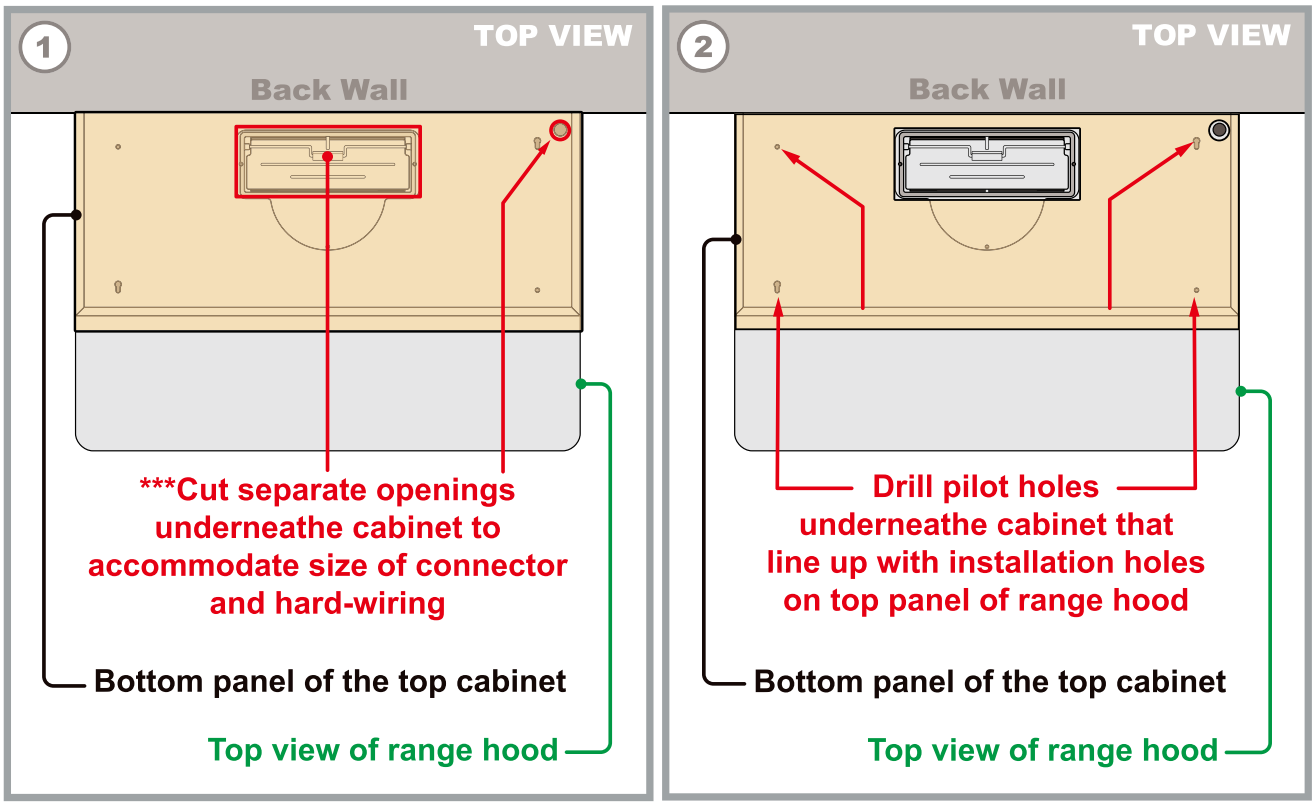

***Ensure you have ⅞" space from wall to your cut out to accommodate size of connector for ducting.*

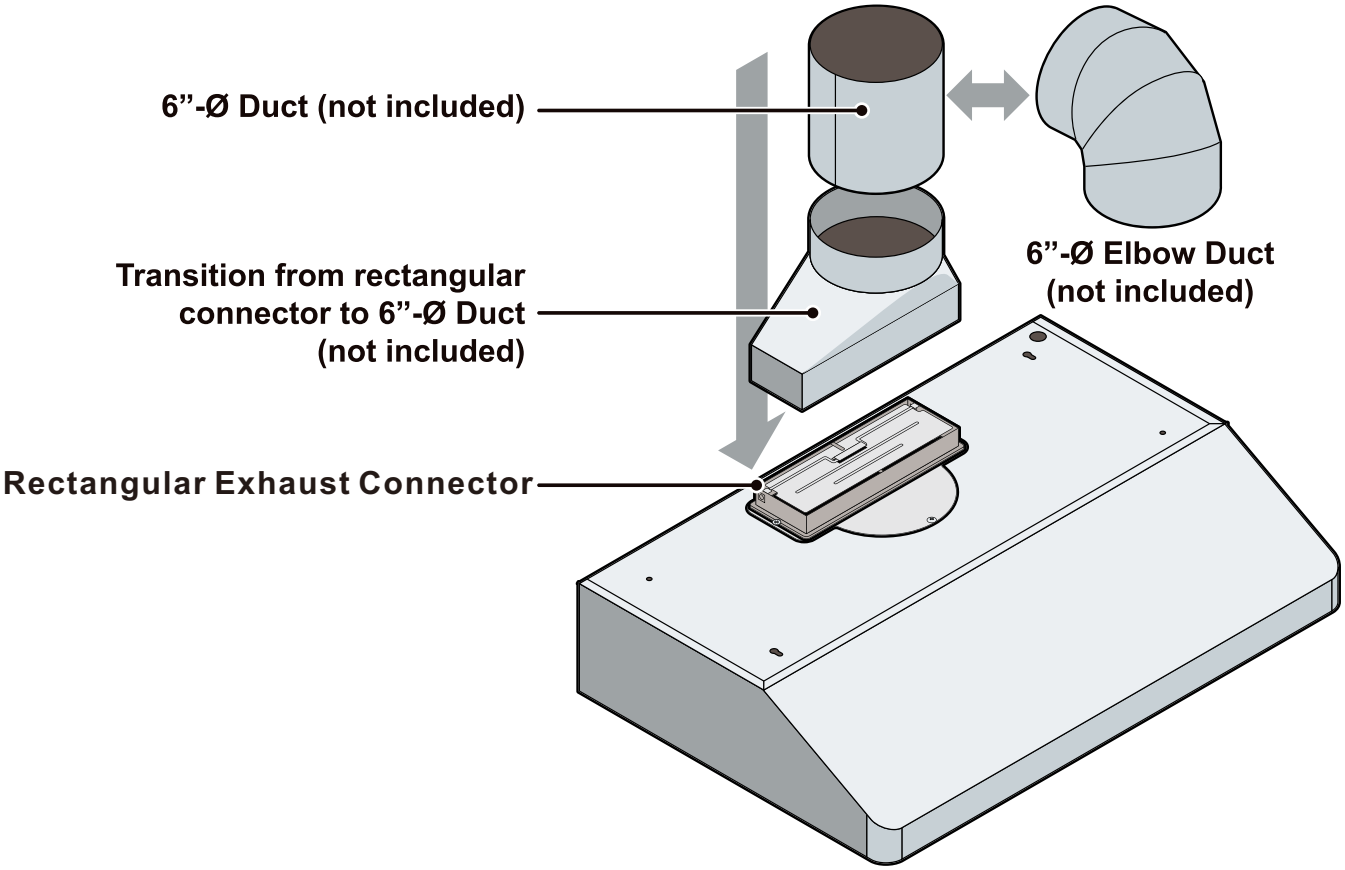

OPTION 2 (continued)

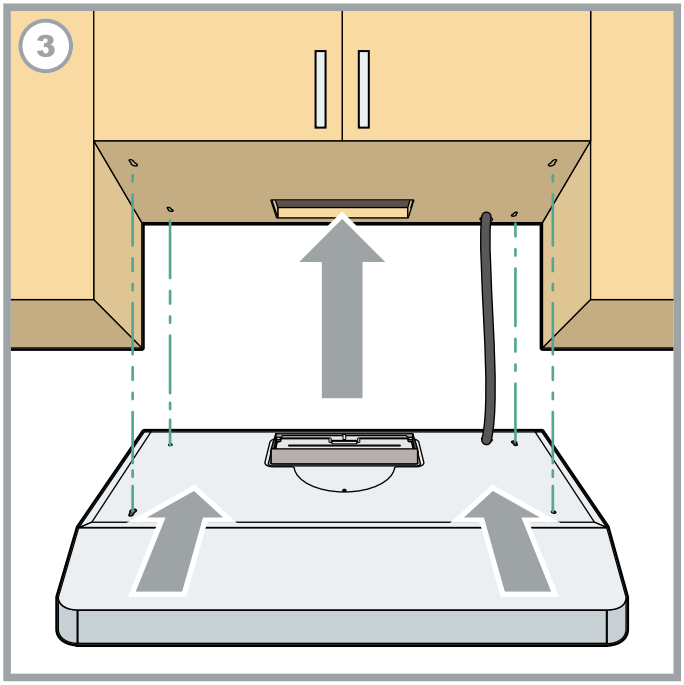

(3) Lift and insert the range hood underneathe the cabinet. Ensure the wiring passes through the opening created below the cabinet.

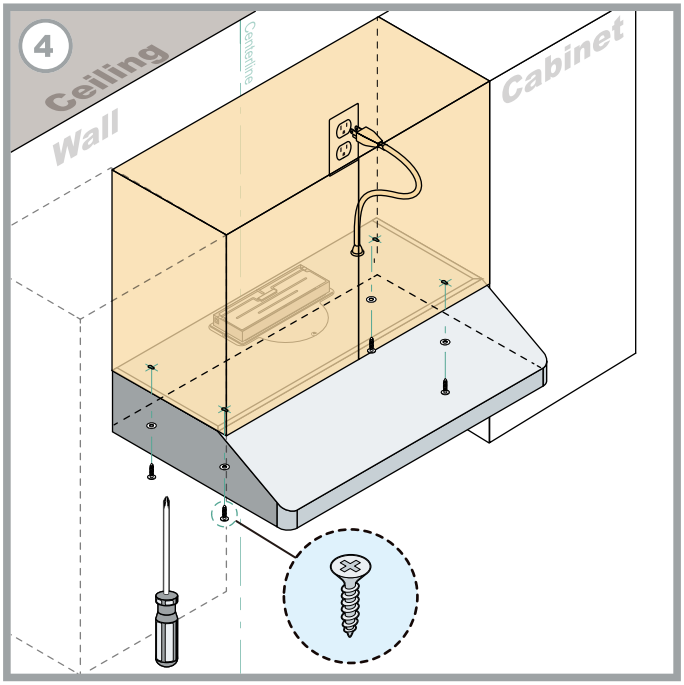

(4) Secure with 4 woodscrews from the inner side of the range hood.

CAUTION: Make certain the range hood is secure before releasing!

Connect the range hood's electrical wiring and check the fan motor and lights are functioning. **Be alert of any electrical hazards and refer to the product label for the suitable voltage of this unit.**

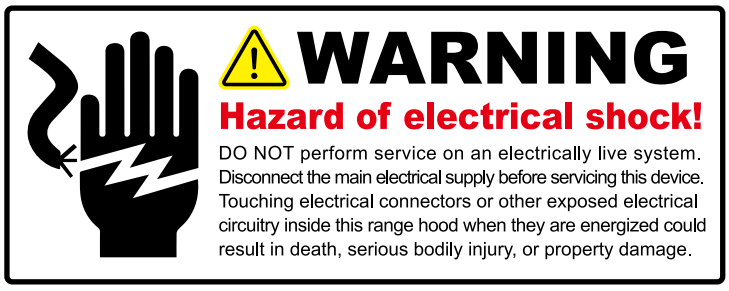



OPTION 2 (continued)

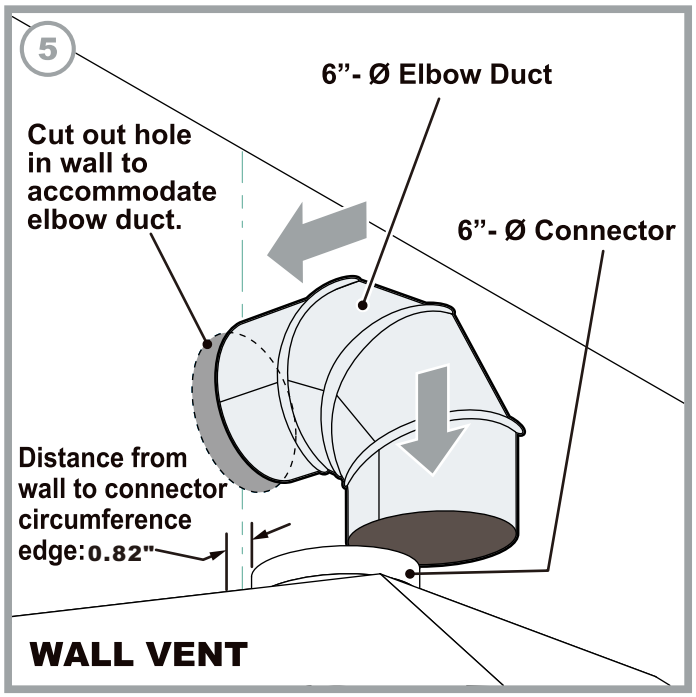

Distance from wall to transition circumference edge for 6” - Ø Transition will be **0.82"**.

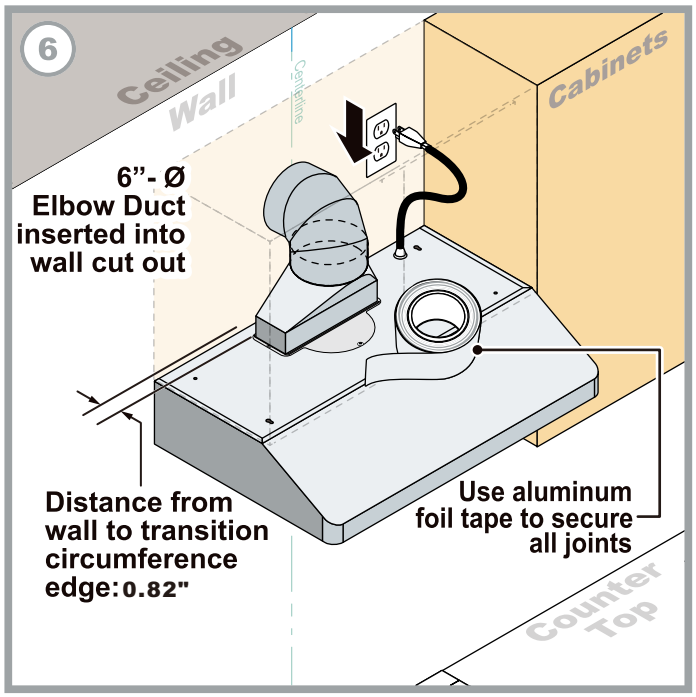

Use aluminum foil tape to make all joints secure and air tight.

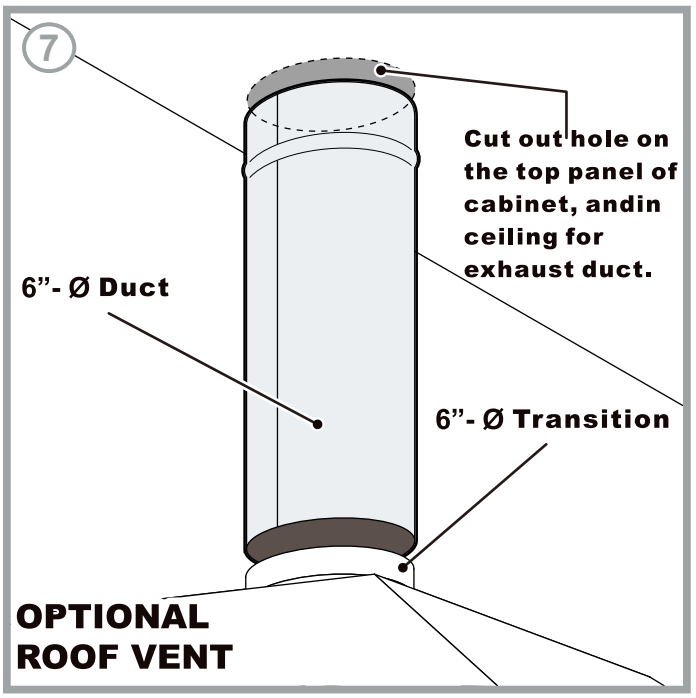

Use 6” round steel pipe to connect the exhaust on the hood to the ductwork above. Use aluminum foil tape to make all joints secure and air tight.

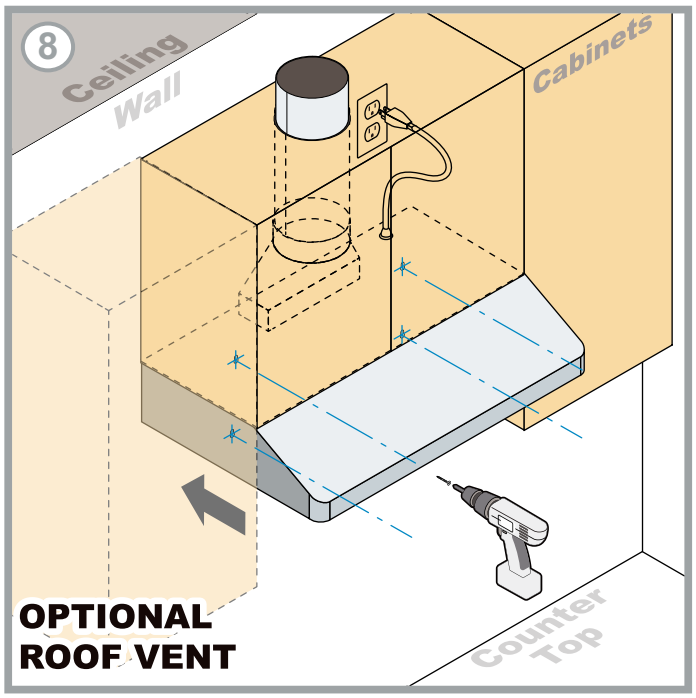

Optional: secure the range hood to the wall through the rear mounting holes using additional screws for added stability.

INSTALLATION OF FILTERS (GUD11 & GUD12)

BOTTOM VIEW

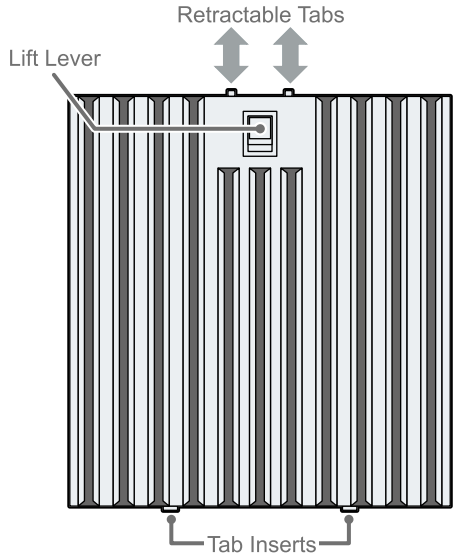

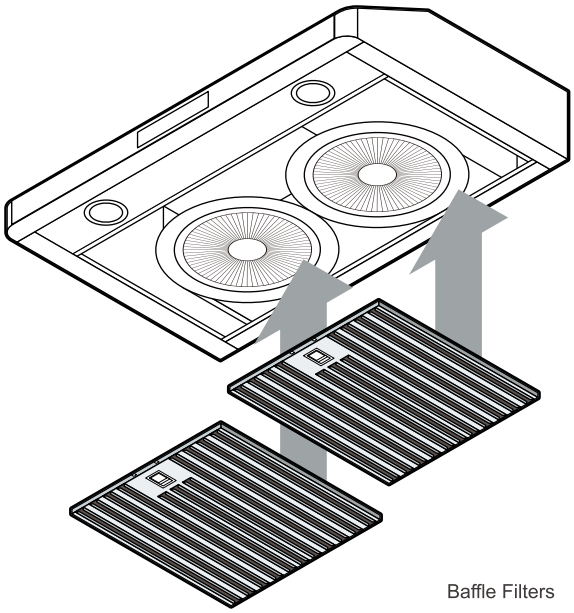

SIDE VIEW

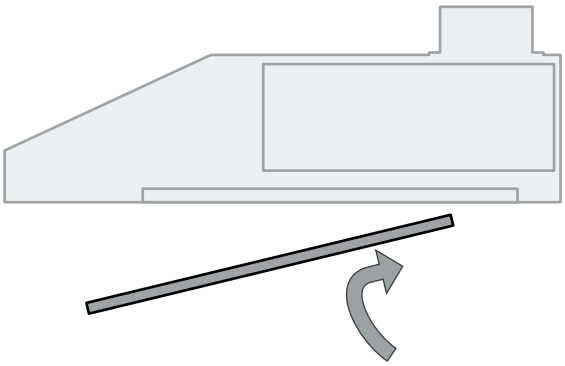

Angle filter and direct tab inserts toward the aft slot of the range hood opening.

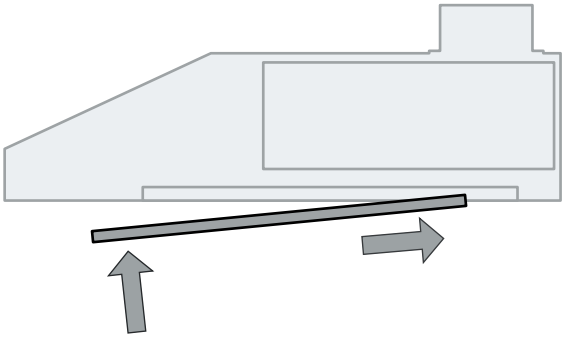

While continuing to install the filter, ensure you lift the lever for the retractable tabs to clear way for flush insertion.

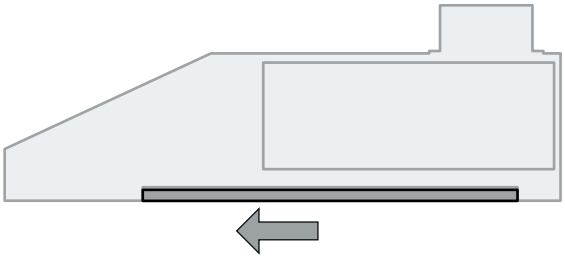

When filter sits flush within the opening, release the lever to lock in place.

INSTALLATION OF FILTERS (GUD10)

BOTTOM VIEW

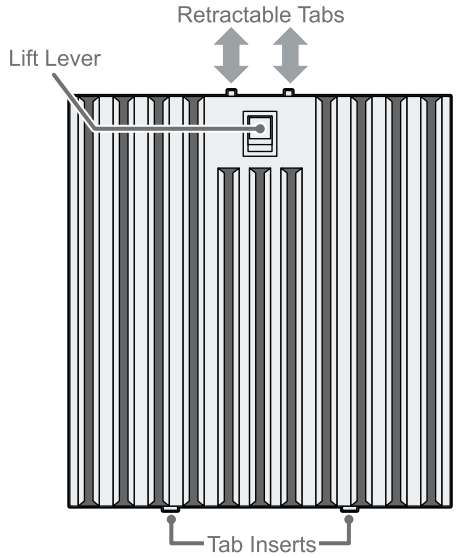

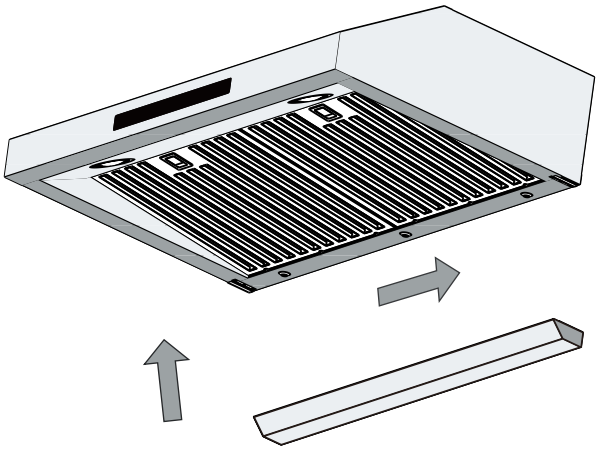

Grease Tunnel

SIDE VIEW

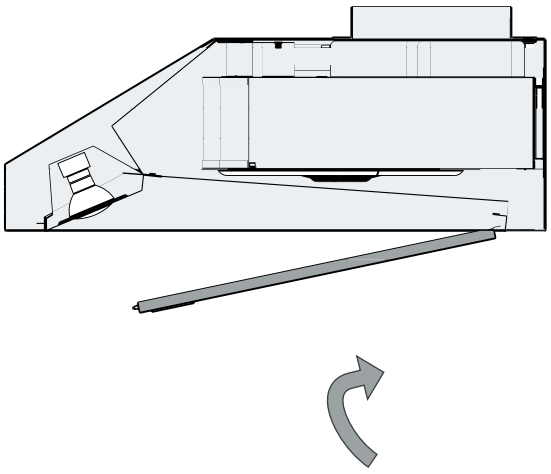

Angle filter and direct tab inserts toward the aft slot of the range hood opening.

While continuing to install the filter, ensure you lift the lever for the retractable tabs to clear way for flush insertion.

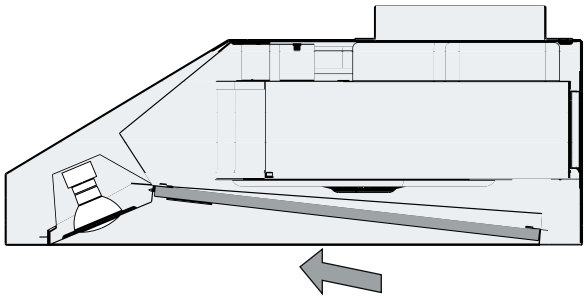

When filter sits flush within the opening, release the lever to lock in place.

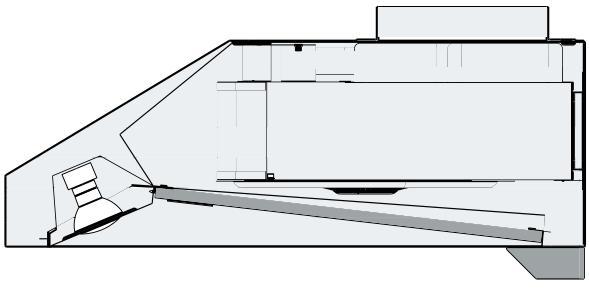

VENTING METHODS

- This range hood is factory set for venting through the roof or wall.
- Duct work can terminate either through the roof or wall. To vent through a wall, a 90° elbow is needed.

IMPORTANT:

- NEVER exhaust air or terminate duct work into spaces between walls, crawl spaces, ceiling, attics or garages. All exhaust must be vented to the outside.
- Use metal/aluminum duct work only.
- Fasten all connections with sheet metal screws and tape all joints with certified Aluminum Tape.
- Use caulking to seal exterior wall or roof opening around the cap.
- Colder climates require wrapping insulation around the ducts and optional blowers.
- The system must have a Backdraft Damper.

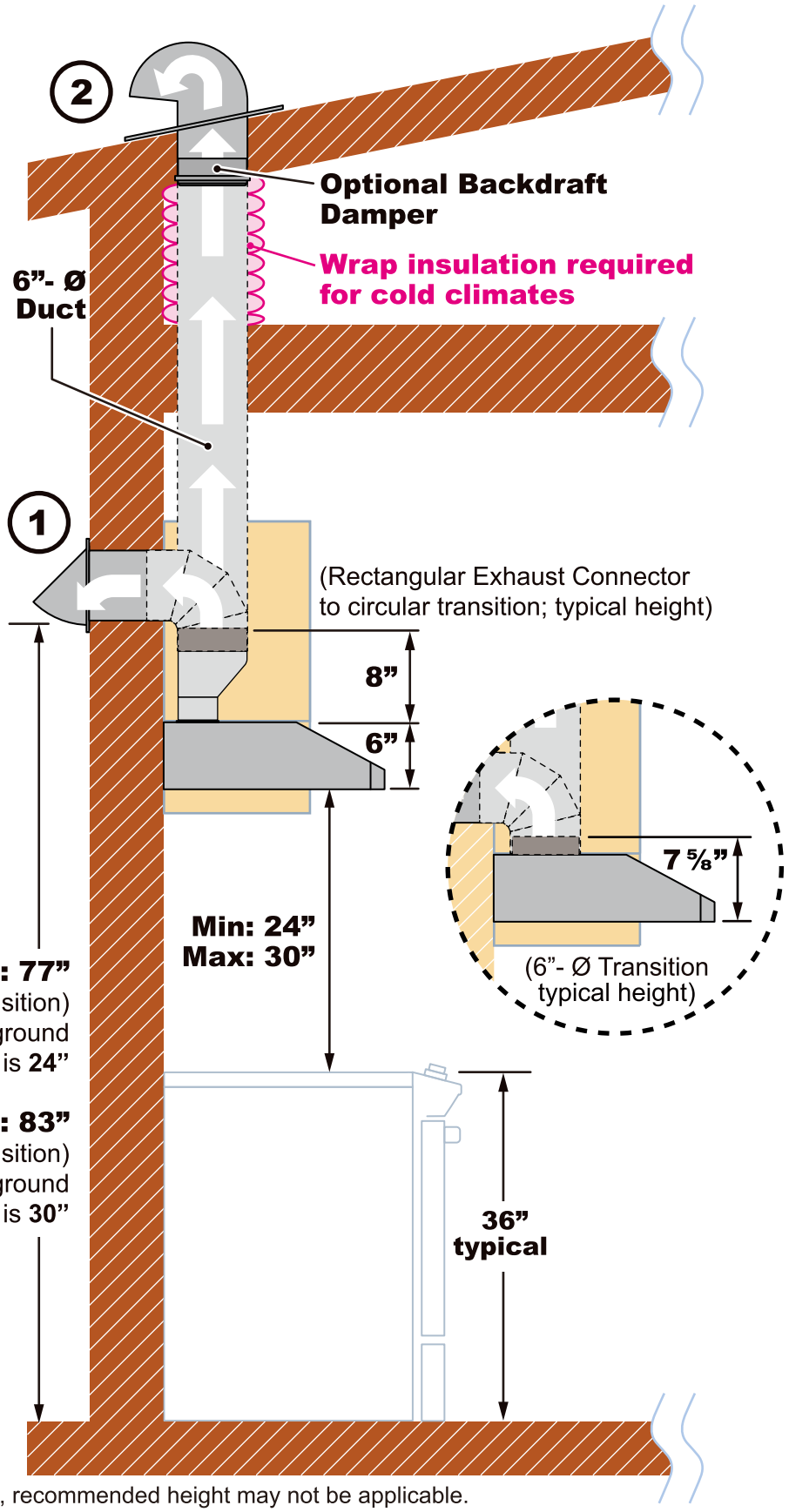

* Due to different ceiling height configurations, recommended height may not be applicable.

BACK VENT OPTION

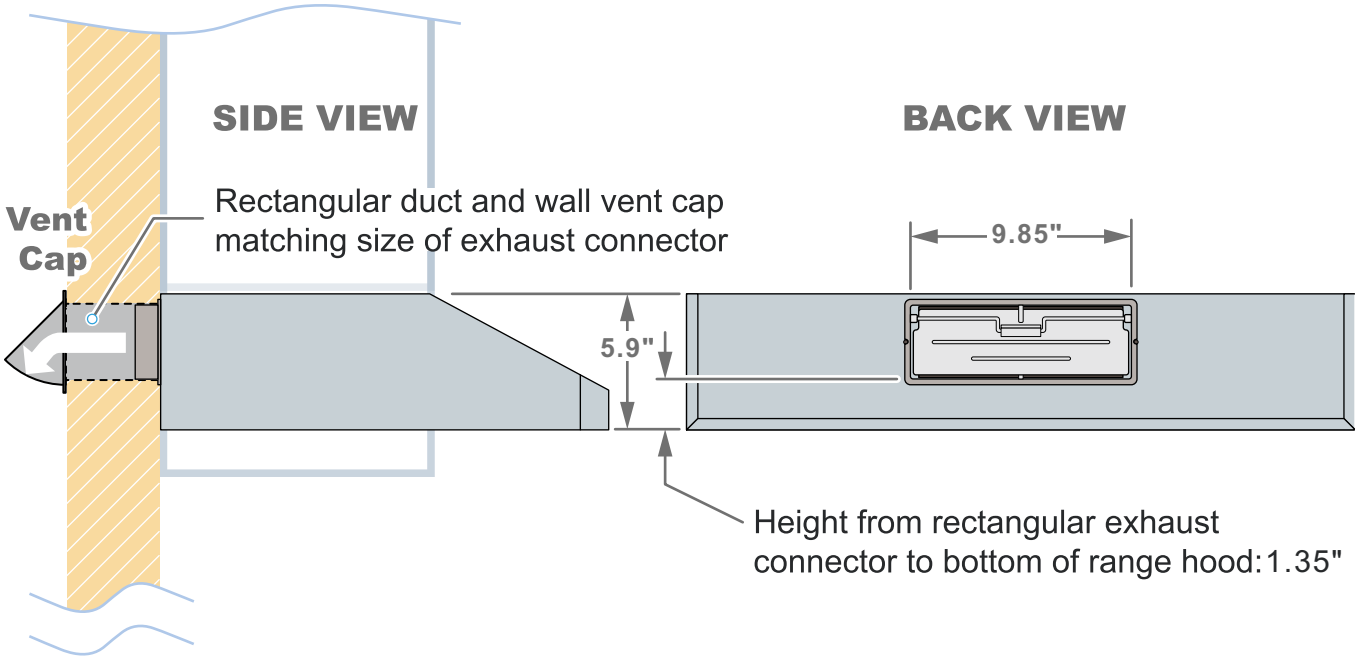

(a) Unfasten screws to remove existing cover plate.

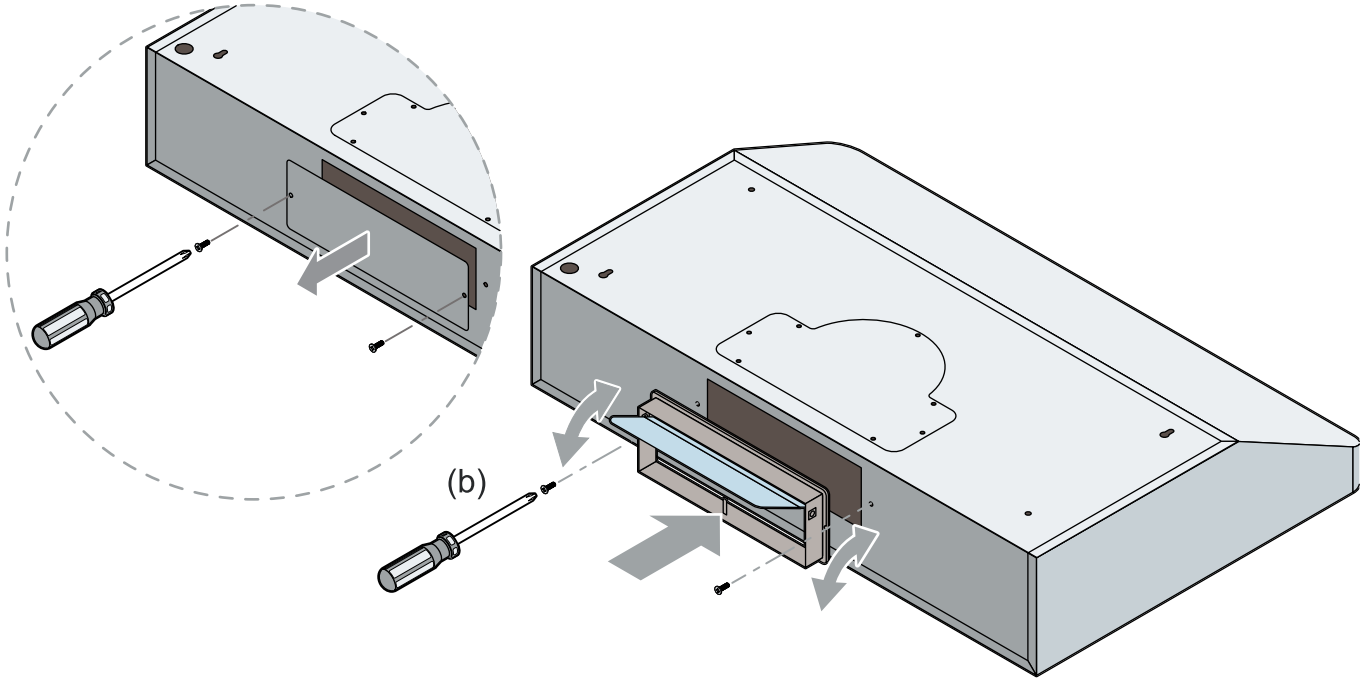

(b) Fasten the exhaust connector (using the existing screws from the cover plate) at the back of the range hood and ensure that the damper (flap) hinge is at the top.

NOTE: ***Installing the Flaps is not recommended when using a mesh screen or damper-equipped wall/roof cap at the exterior outlet.***

WIRING DIAGRAM

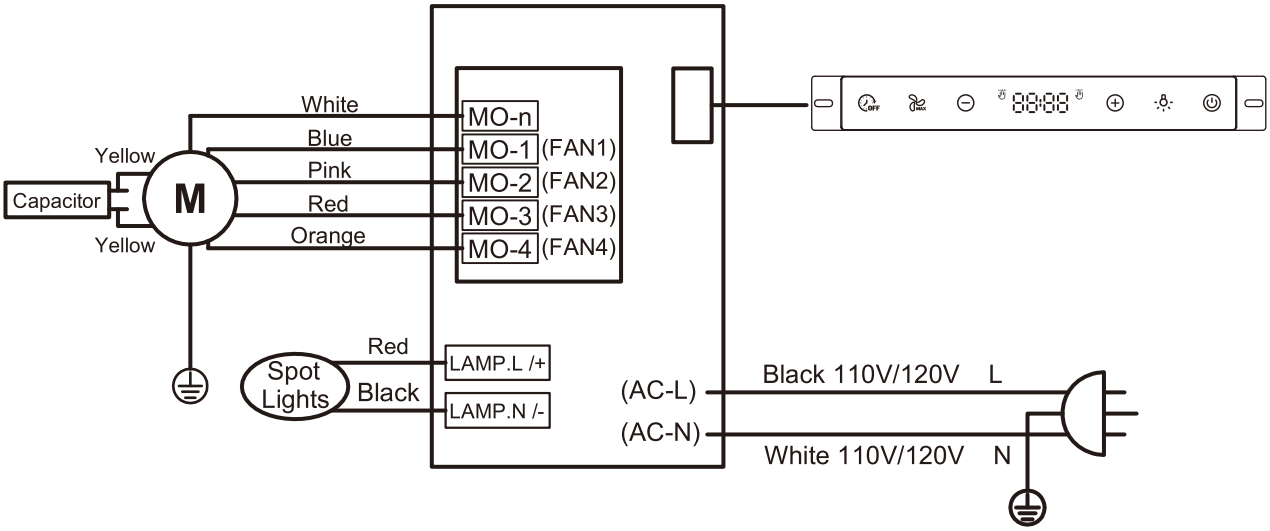

RANGE HOOD OPERATIONS



A+H: Gesture Sensing Point

* Sensing distance: 8–10 cm (3''–4'')
* When powered off, hold the power button to turn gesture control on/off
* Powered on: swipe left to right to increase suction; powered off: swipe to activate F1 and lights
* Powered on: swipe right to left to reduce suction; powered off: swipe to activate F4 and lights

B: Power Button

* Powered off: activate F1 and lights
* Powered on: turn off suction and lights

C: Light

* Powered off: turn on lights
* Powered on: turn on lights

D: Increase Suction

* Powered on: increase suction, max F4

E: Decrease Suction

* Powered on: decrease suction, min F0

F: Max Suction

* Powered on: set suction to F4

G: Delay-off Timer

* Tap to enable the timer with a default 3-minute countdown. Press D to add time (max 30 mins) and E to reduce time (min 1 min). The screen shows remaining time; the hood and lights shut off automatically upon timeout.
* The unit remembers your last timer duration for next activation. If 15 mins was set before, it loads 15 mins by default next time.
* Press G again to cancel the active delay timer.

Remote Control

The remote control is ready to use without any connection or syncing required, please follow these steps before first use:

1) Open the battery cover.
2) Insert two AAA batteries, observing the correct polarity (+/-), package does not contain the batteries because of transportation restrictions.

Your remote control is now ready to use.

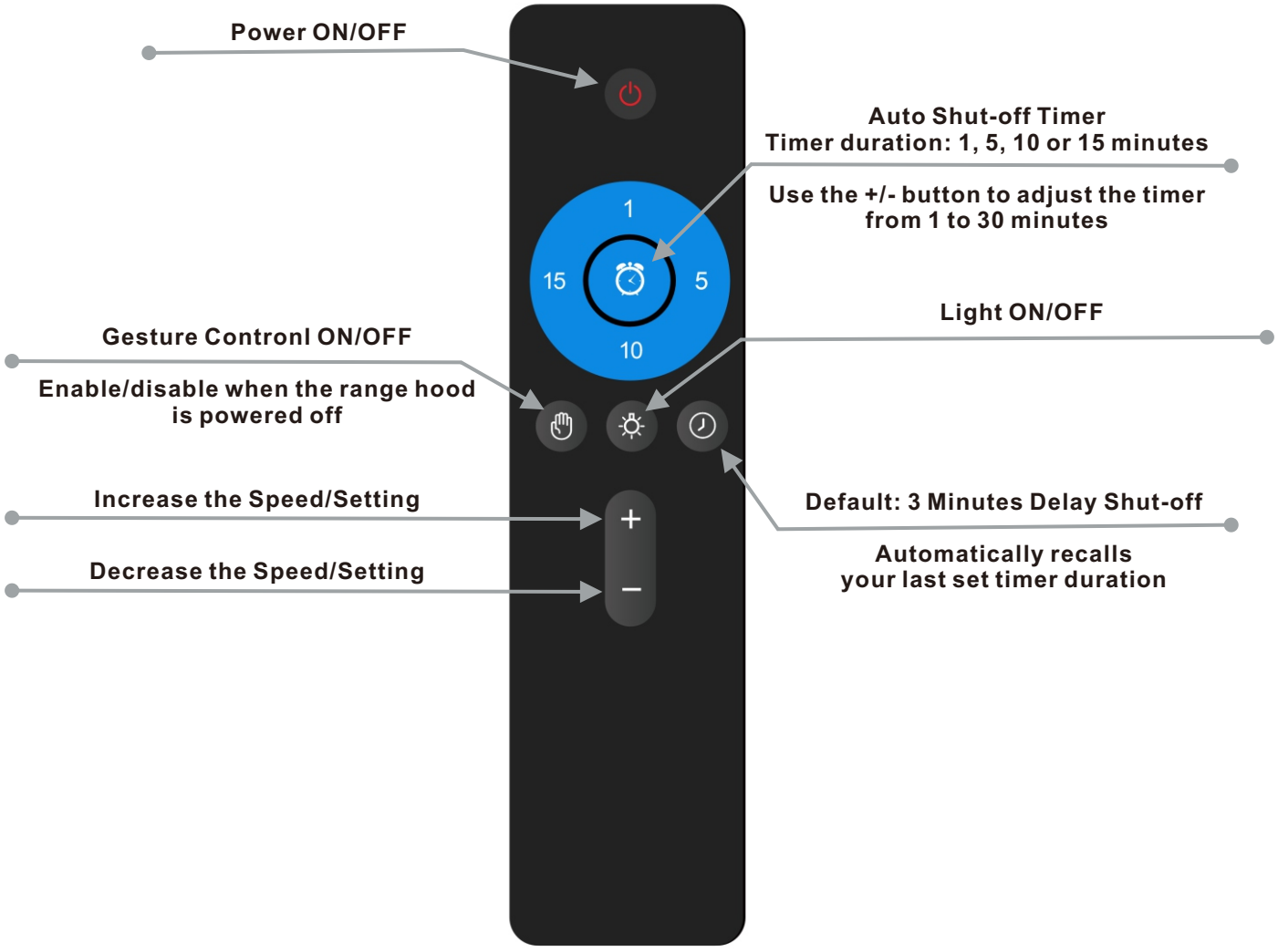

TROUBLESHOOTING

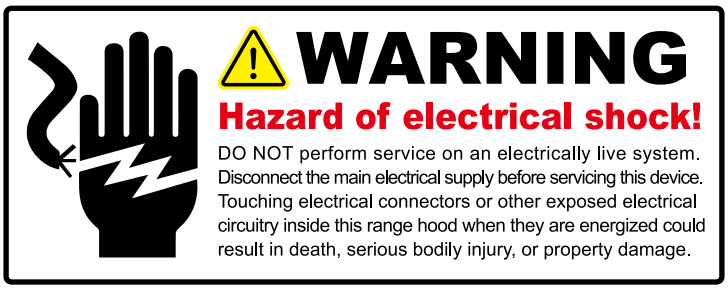

1. If the range hood or lights do not operate after installation:	• Check if the range hood has been plugged in, make sure that all power has been turned ON, fused not blown and all electrical wiring are properly connected. • Swap out light assembly to working ones to determine whether it is caused by defective bulbs. *See Replacing the light bulbs page.*
2. The range hood vibrates when the blower is on:	• The range hood might not have been secured properly on to the ceiling or wall.
3. The blower or fan seems weak:	• Duct is too small. Range hood WILL NOT function efficiently with insufficient duct size. For example: Connecting this hood to 4”, or 5” duct will reduce the suction and create extra noise and vibrations. Check if duct is clogged or if damper unit is not installed correctly or opening properly. A tight mesh on a side wall cap unit might also cause restriction to the air flow.
4. The lights work but the blower is not spinning at all, is stuck or is rattling.	• The blower might be jammed or scraping the bottom due to shipping damage. Please contact us immediately.
5. The hood is not venting out properly:	• Make sure the distance between the stove top and the bottom of the hood is within* 24” and 30” in distance. **Due to different ceiling height conffgurations, recommended height may not be applicable.* • Reduce the number of elbows and length of duct work. Check if all joints are properly connected, sealed, and taped. • Make sure the power is on high speed for heavy cooking.

USE AND CARE INFORMATION

Operations:

- Read and understand all instructions and warnings in this manual before operating the appliance. Save these instructions for future reference.
- Always leave safety grills and filters in place. Without these components, operating blowers could catch on to hair, fingers and loose clothing.
- NEVER dispose cigarette ashes, ignitable substances, or any foreign objects into blowers.
- NEVER leave cooking unattended. When frying, oil in the pan can easily overheat and catch fire. The risk of self combustion is higher when the oil has been used several times.
- NEVER cook on “open” flames under the range hood. Check deep-fryers during use: Superheated oil may be flammable.

Cleaning:

- The saturation of greasy residue in the blower and filters may cause increased inflammability. Keep unit clean and free of grease and residue build-up at all times to prevent possible fires.
- Filters must be cleaned periodically and free from accumulation of cooking residue. Old and worn filters must be replaced immediately.
- DO NOT operate blowers when filters are removed. Never disassemble parts to clean without proper instructions. Disassembly is recommended to be performed by qualified personnel only. Read and understand all instructions and warnings in this manual before proceeding.

DO’S AND DON’TS FOR DUCT VENTING

a. Avoid the use of sharp elbows. Use 45 degrees instead, if possible.
b. DO NOT use REDUCERS. Keep the size of the duct the same, as per the manual. A reducer will reduce the CFM of the hood and increase the noise.
c. DO NOT use plenum boxes. Boxes create turbulence and make the hood inefficient. Use a smooth elbow to guide the air outdoors.

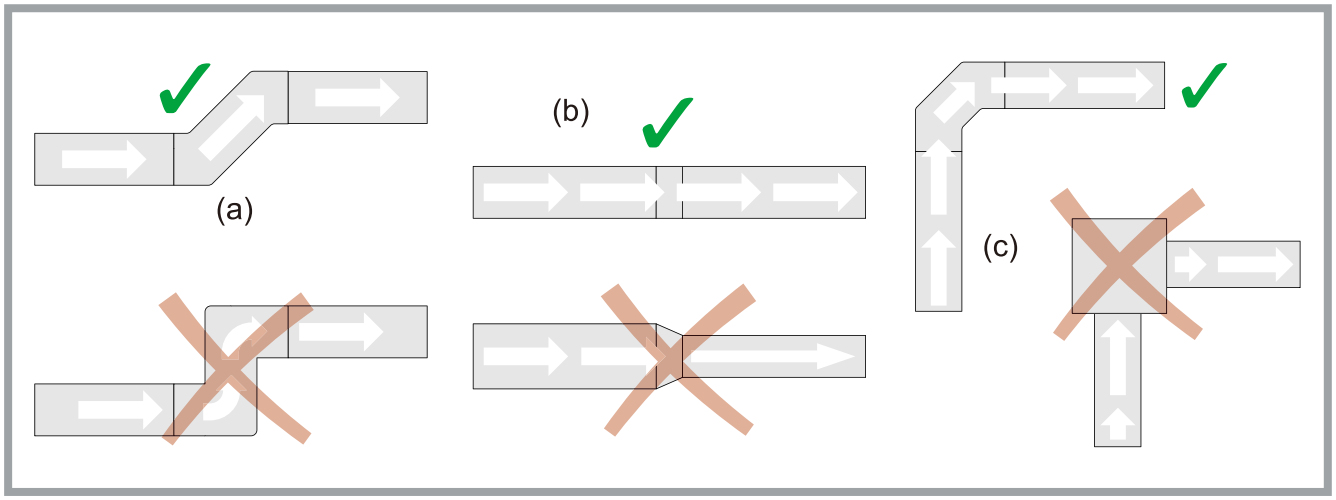

MAINTENANCE

SAFETY WARNING: Never put your hand into area housing the fan while the fan is operating!
For optimal operation, clean range hood and all baffle/spacer/filter/grease tunnel/oil container regularly. Regular care will help preserve the appearance of the range hood.

Cleaning Exterior surfaces:

- Clean periodically with hot soapy water and clean cotton cloth. Do not use corrosive or abrasive detergent (e.g. Comet Power Scruv®, EZ-Off® oven cleaner), or steel wool/scoring pads, which will scratch and damage the stainless steel surface. For heavier oil use liquid degrease such as “Forumla 409®” or “Fantastic®” brand cleaner.
- If the hood looks splotchy (stainless steel hood), use a stainless steel cleaner to clean the surface of the hood. Avoid getting cleaning solution onto or into the control panel. Follow directions of the stainless steel cleaner. **CAUTION: Do not leave on too long as this may cause damage to the hood finish.** Use a soft towel to wipe off the cleaning solution, gently rub off any stubborn spots. Use a dry soft towel to dry the hood.
- After cleaning, you may use non abrasive stainless steel polish such as 3M® or ZEP®, to polish and buff out the stainless luster and grain. Always scrub lightly, a with clean cotton cloth, and with the grain.
- DO NOT allow deposits to accumulate or remain on the hood.
- DO NOT use ordinary steel wool or steel brushes. Small bits of steel may adhere to the surface and cause rusting.
- DO NOT allow salt solutions, disinfectants, bleaches, or cleaning compounds to remain in contact with stainless steel for extended periods. Many of these compounds contain chemicals, which may be harmful. Rinse with water after exposure and wipe dry with a clean cloth.

Cleaning Aluminum Grease Filter / Stainless Steel Filterless Grill:

• IMPORTANT: Drain oil from oil containers before oil and residue overflow!

• The metal filters fitted by the factory are intended to filter out residue and grease from cooking. It need not be replaced on a regular basis but are required to be kept clean.

• Filters should be cleaned after every 30 hours of use.

• Remove and clean by hand. Spray “Formula 409” or equivalent degreasing detergent and leave to soak if heavily soiled.

• Dry filters and re-install before using hood.

GU10 BULB REPLACEMENT

WARNING

Hazard of Burns

Light bulb can become extremely hot when turned on.
DO NOT touch bulb until switched off and cooled.
Touching hot bulbs could cause serious burns.

WARNING

Hazard of electrical shock!

DO NOT perform service on an electrically live system. Disconnect the main electrical supply before servicing this device. Touching electrical connectors or other exposed electrical circuitry inside this range hood when they are energized could result in death, serious bodily injury, or property damage.

WARNING

Make sure the range hood is turned off and the bulb has cooled down.

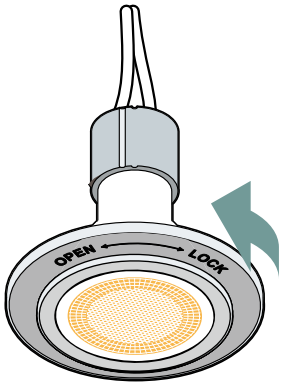

1. Remove the bulb

Turn the bulb **counterclockwise** to release and remove it.

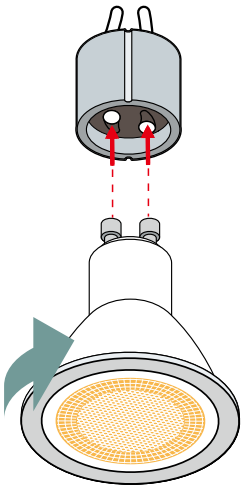

2. Install a new bulb

Align the **pins** with the socket slots, push in, and turn **clockwise** until secure

Warranty

Warranty Service

Original dated purchase receipt or invoice is required for all warranty claims.

Warranty Coverage

Motor	Lifetime
Control Panel	5-year
Gu10 Bulbs	2-year

Coverage Eligibility

Only valid for the original buyer using the product for regular household use.

Void Warranty Scenarios

* Damage from improper installation, accidents, abuse, negligence, power surges, natural disasters or improper operating environments
* Unauthorized disassembly, repair or modification
* Commercial use or use outside intended household function
* Faulty connection with third-party devices
* Defaced, altered or removed product labels; rough handling or second-hand sales

Warranty Terms

* Warranty only valid in the US and Canada
* Non-transferable, only for the original purchaser
* All implied warranties expire once the stated warranty term ends

Customer Support

* Email for technical help and inquiries: support@beloak.net

Note: All policies are subject to update without prior notice. When contacting support, prepare the product model, detailed fault description and purchase receipt to verify your valid warranty.



Correct Disposal of This Product:

This marking indicates that this appliance should not be disposed with other household wastes. To prevent potential harm to the environment or human health caused by uncontrolled waste disposal, please recycle it responsibly. Proper disposal helps promote the sustainable reuse of material resources.