ASSEMBLY INSTRUCTION
WINE/BAR CART

1.Extra Screws of A/B/D are provided in case of any screws missing in the boxes.
2.Please take the time to identify and count all parts as well as the hardware to this product.

PART LIST

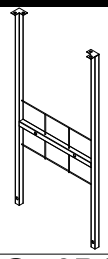	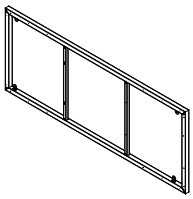	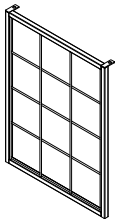	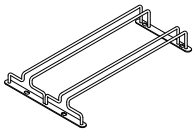
①×2PCS	②×1PC	③×2PCS	④×1PC
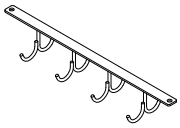	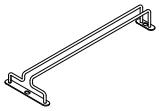	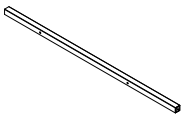	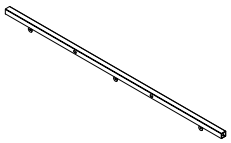
⑤×1PC	⑥×1PC	⑦×2PCS	⑧×2PCS
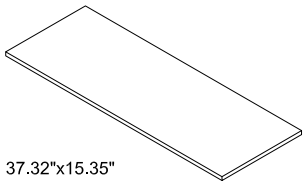	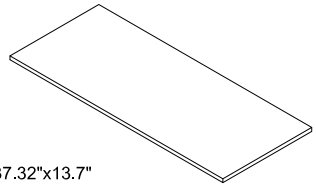	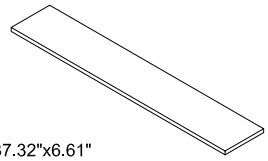	
⑨×1PC	⑩×1PC	⑪×1PC	

HARDWARE

 M6x12mm	 M6x35mm							
A×20PCS	B×12PCS	C×1PCS	D×14PCS					

Noted:

1.it is recommended that this item should be assembled by two adults .

2.Assemble this item in a soft surface.such as cardboard or carpet. to protect finish.

For product assistance and warranty information. please contact us before return this product:
Customer Service: furniture3@golden-south.com

Please provide us with following information.so that it will be easier to resolve your problem smoothly.

1.Order ID: 2.Pictures of Your Items Damage or Parts Missing:

Thank You for Purchasing Our Furniture.It's an Honor to Be in Your Home!

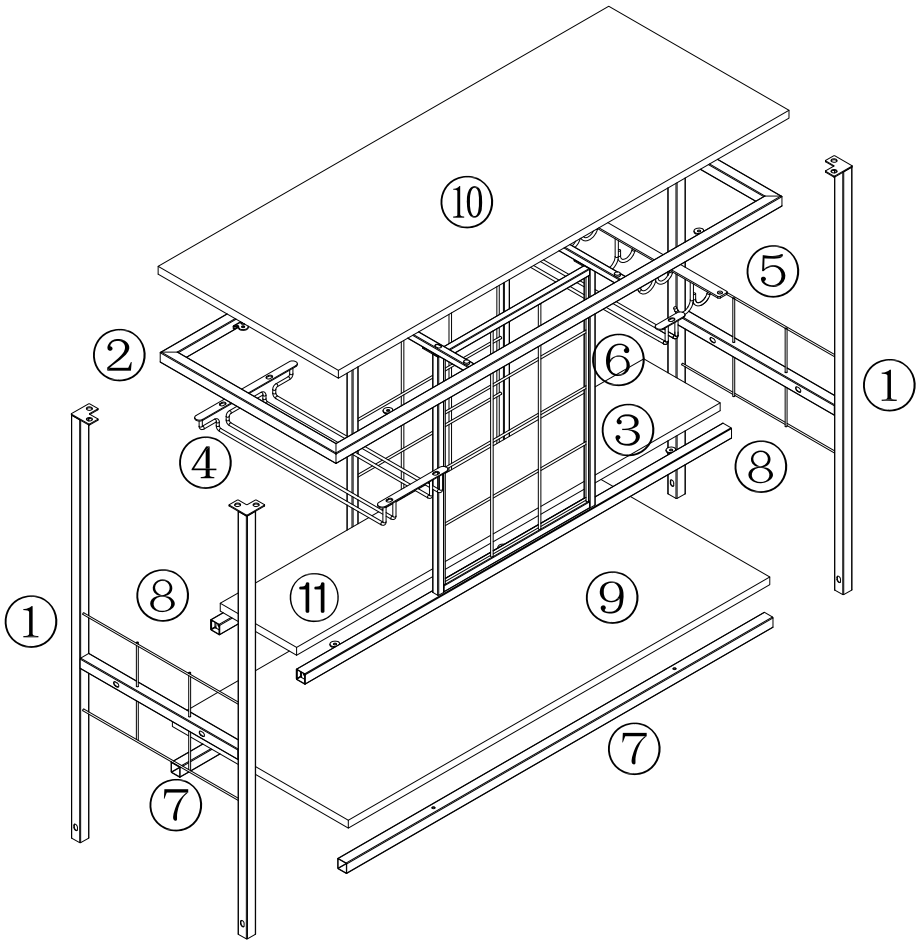

NOTED:Pls do not tighten all bolts until the products is assembled completely.

Step 1:

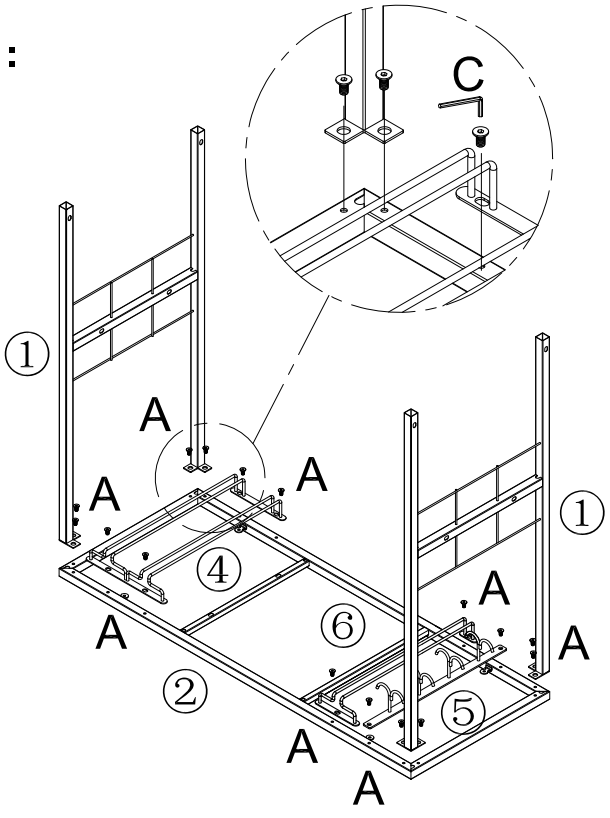

A×16PCS

Step 2:

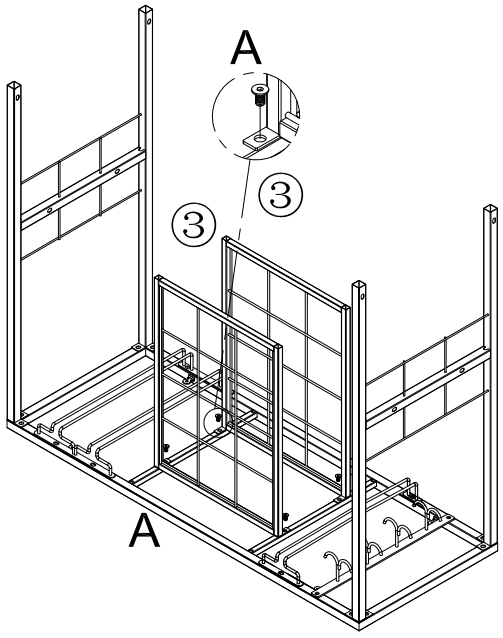

A×4PCS

Step 3:

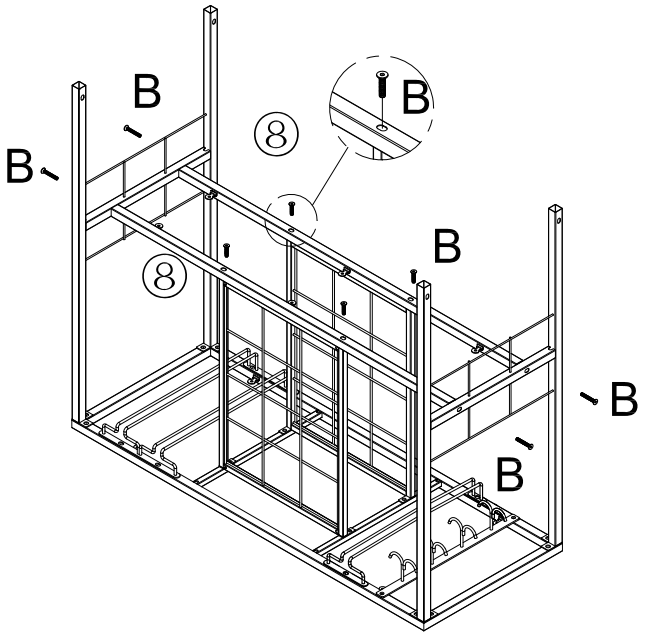

B×8PCS

Step 4:

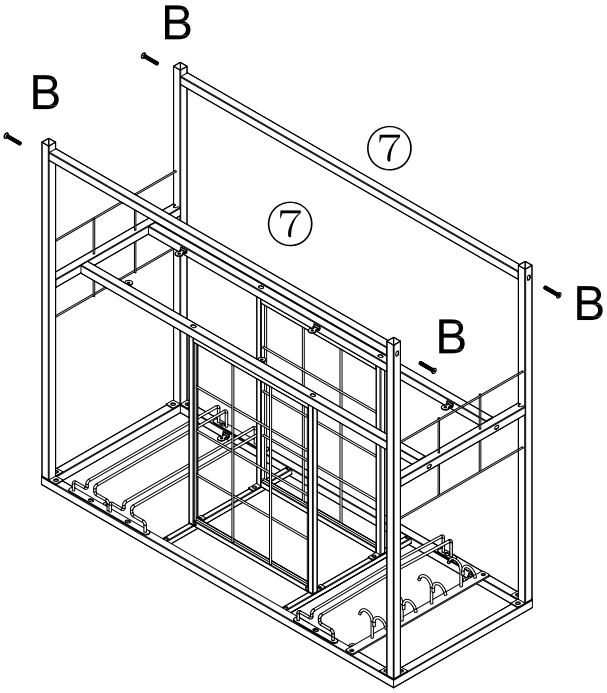

B×4PCS

Step 5:

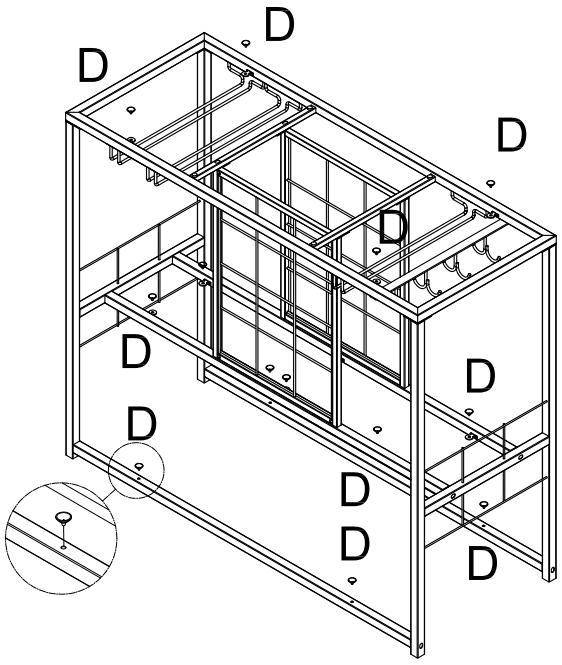

D×14PCS

Step 6:

