Installation Instruction

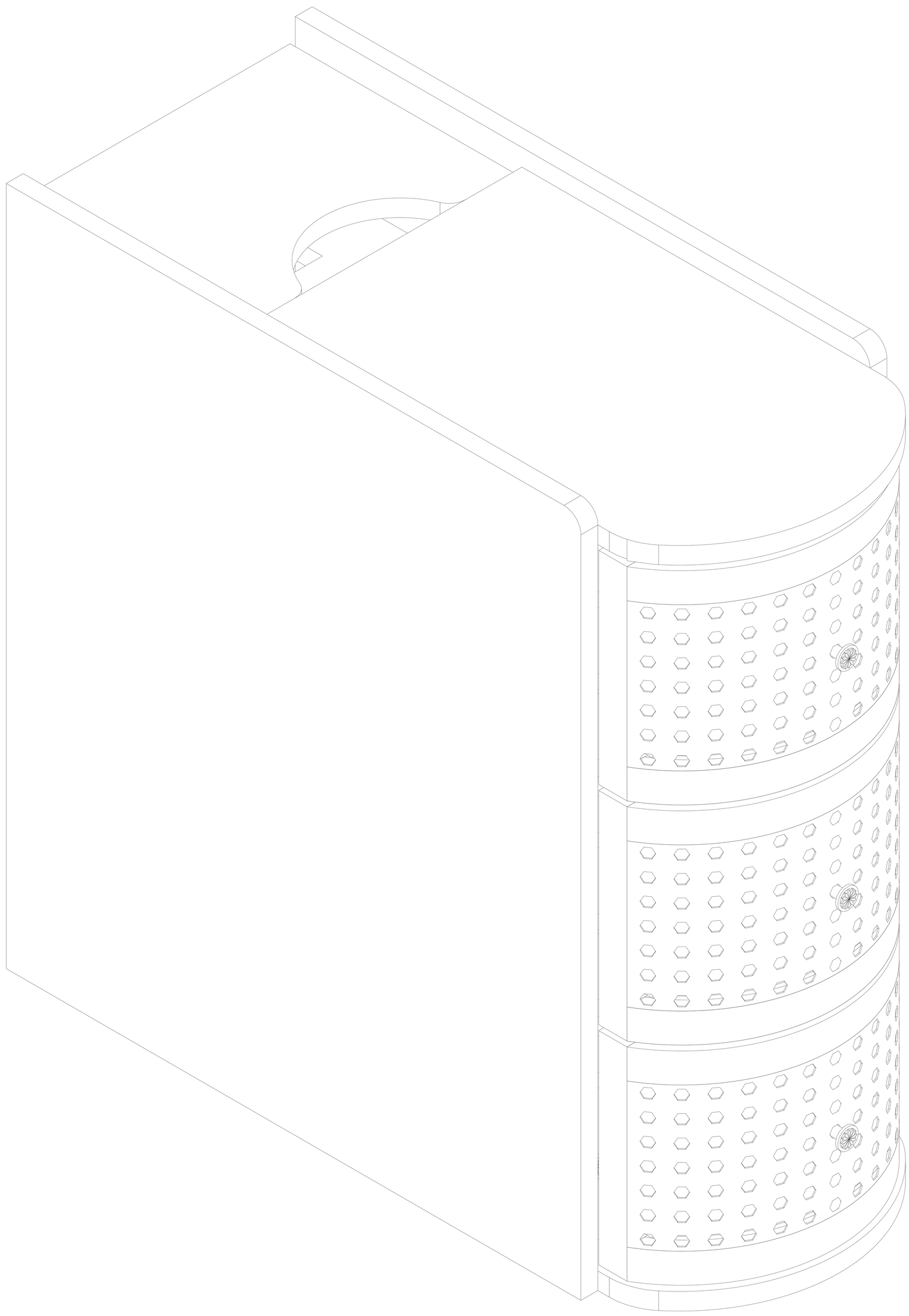

Assembling

What you need

- Use the packaging carton as a working surface to prevent product damage during assembly
- Phillips head screwdriver

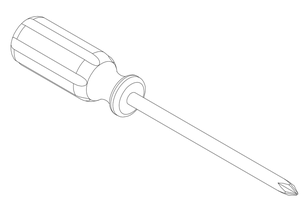

Weight Limitation

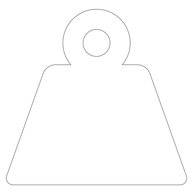

100 lbs table top | 35 lbs per

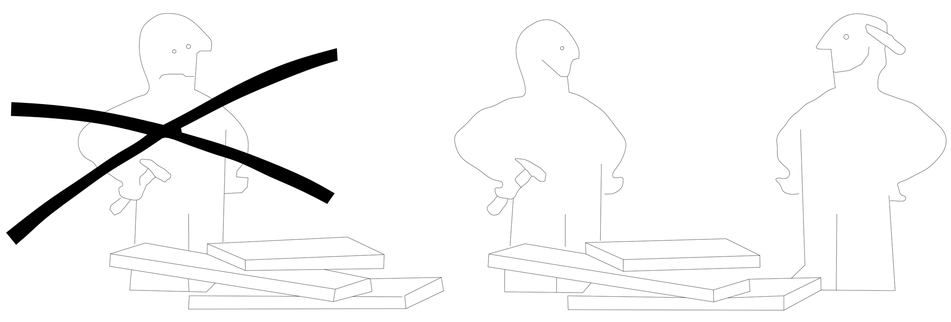

What' included

Code	Description	Qty
A	Cam Bolt M6X35MM	22
B	Cam Lock 15X10MM	34
C	Wooden Dowel M8X30MM	18
D	Screw M4X40MM	16
E	Cam Bolt M4X10MM	6
F	Screw M3.0X14MM	18
G	Screw M3.5X14MM	14
H	Circular hole Decals	34
I	EVA Foot mat	4
J	Retro handle	3
K	Two-way rail	6
L	Extension cord	1
M	Hinge	2
N	Cam Bolt M6X35MM	12
O	Cam Bolt M4X6MM	3

The Hardwares

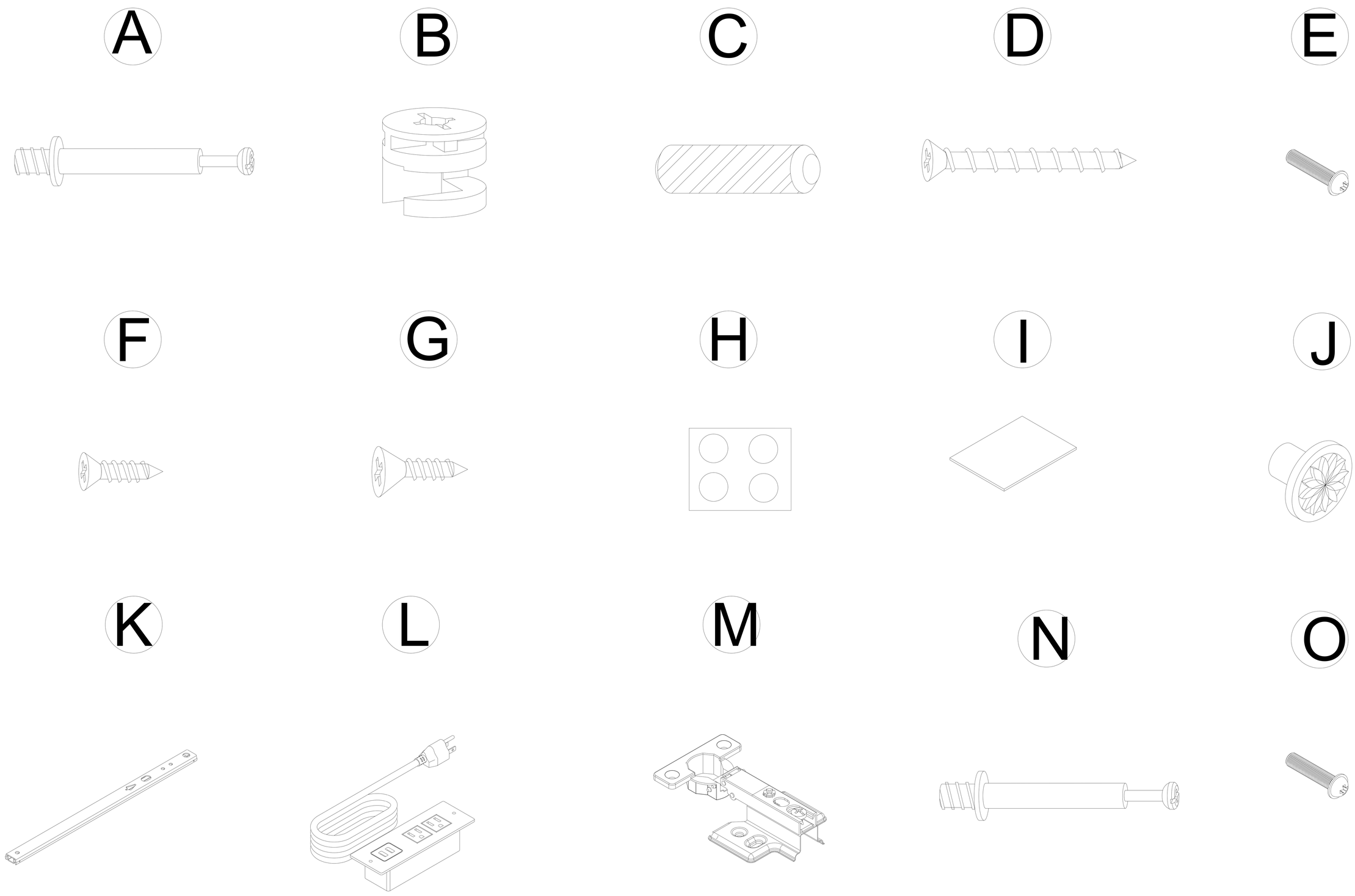

IMPORTANT:
1.Do not tighten bolts / screws completely until all bolts / screws are lined up and inserted into holes.
2.Do not over tighten screws and bolts to avoid stripping
3.Please use hand tools to assemble this product, you can also use power tools (please use power tools carefully).

Included Accessories

Code	Description	Qty
1	Cabinet Top	1
2	Bottom Panel	1
3	Left Side Panel	1
4	Right Side Panel	1
5	Iron vine pulls noodles	3
6	Drawer left panel	3
7	Drawer right side panel	3
8	The drawer bottom	3
9	After the drawer board	3
10	Lower Plate	1
11	Back brace	1
12	Upper plate	1
13	Back board	1
14	Back board	1
15	Round tube	1
16	Front pull strip	2

The Accessoriess

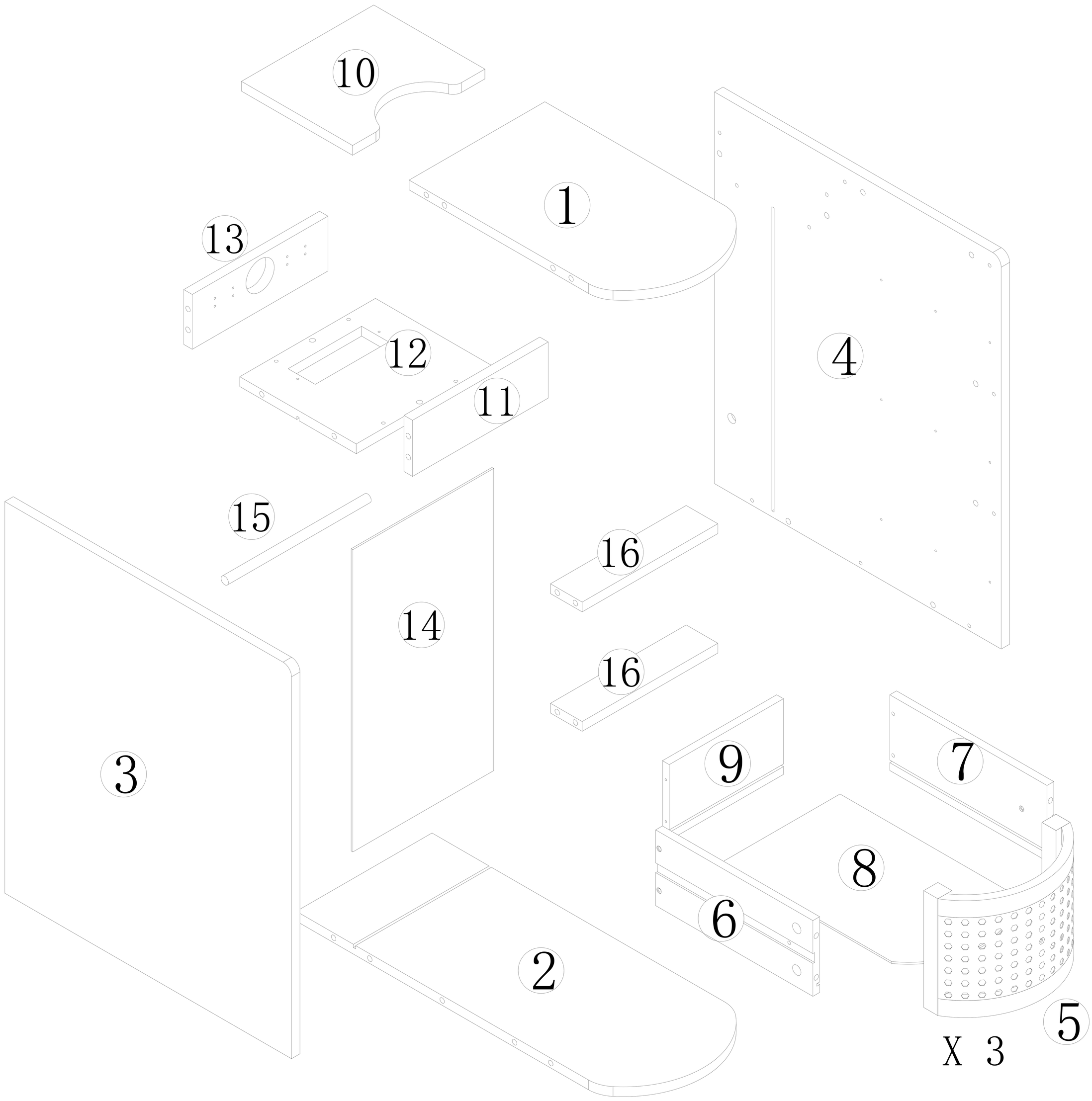

Step 1

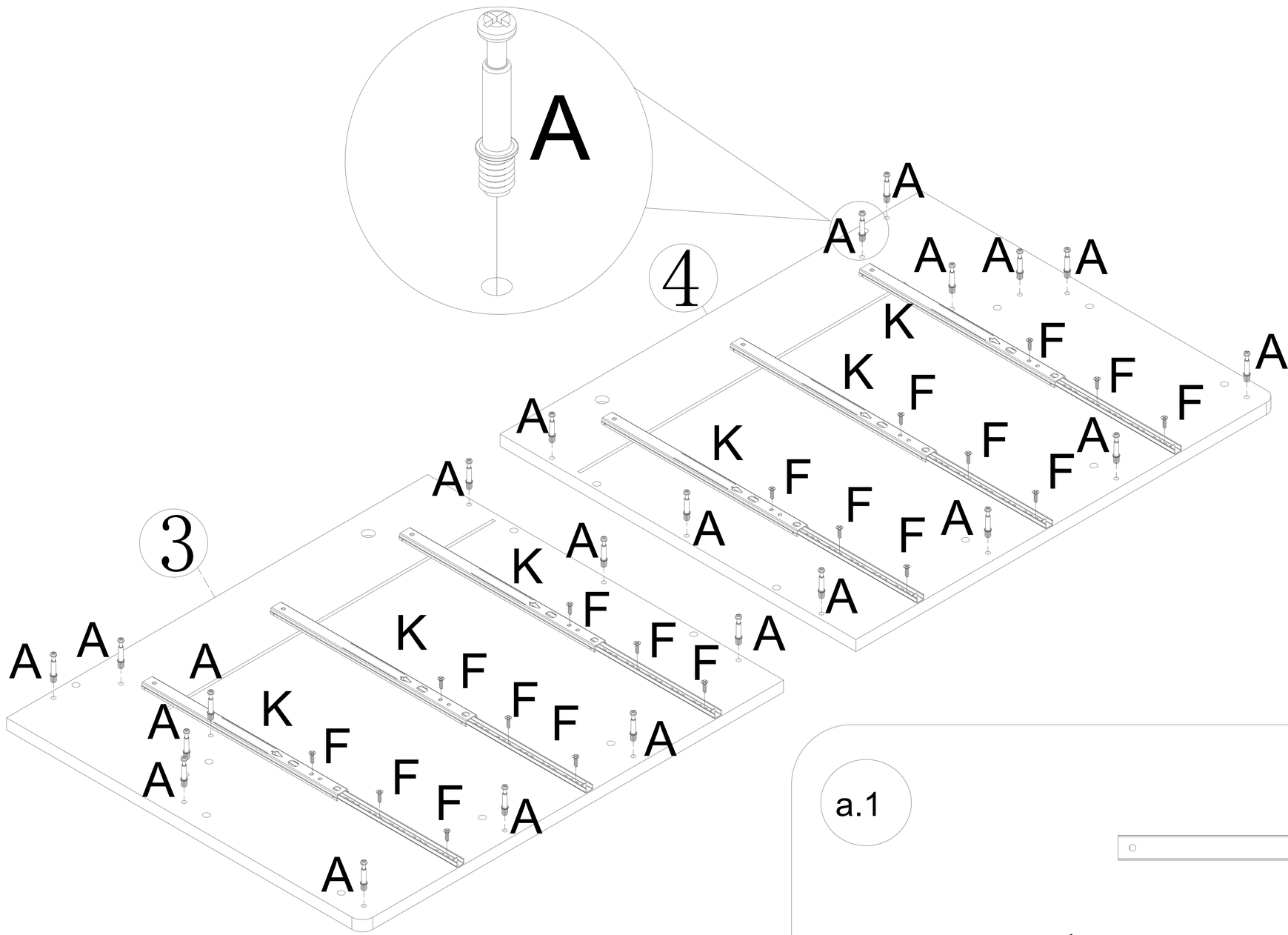

A	×22

K	×6

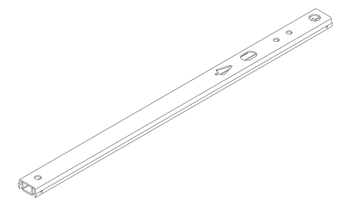

F	×18

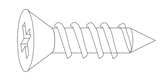

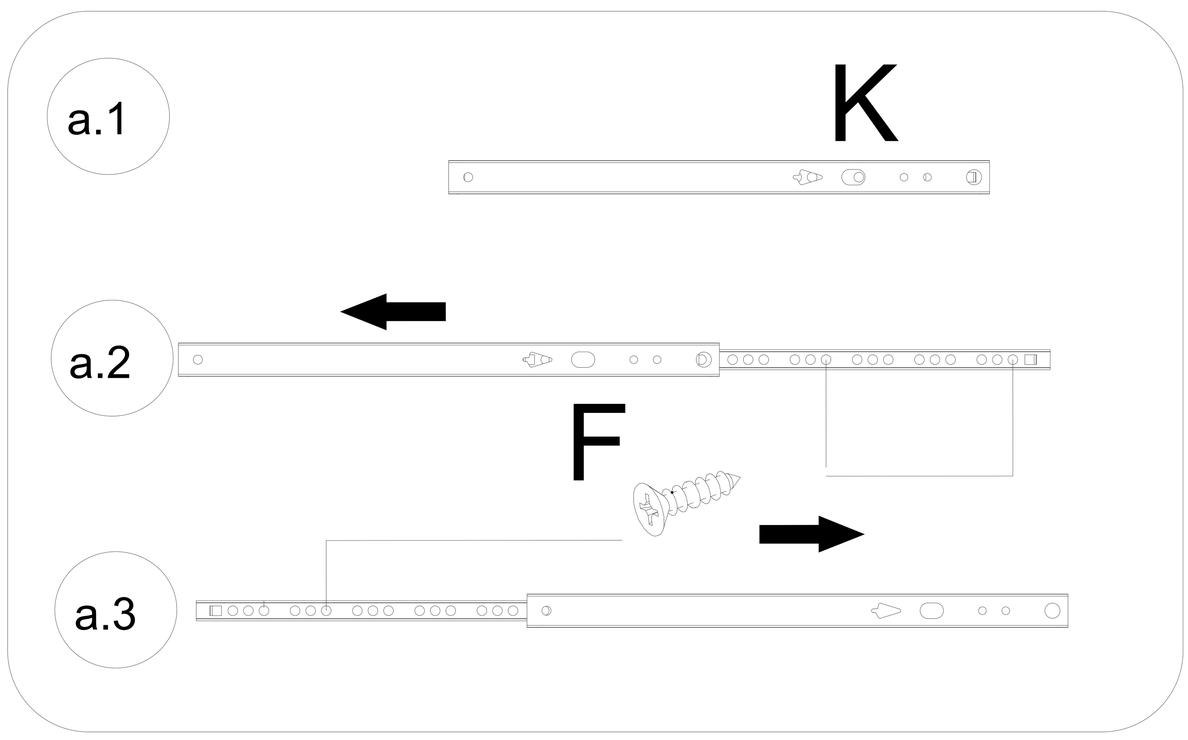

Step 2

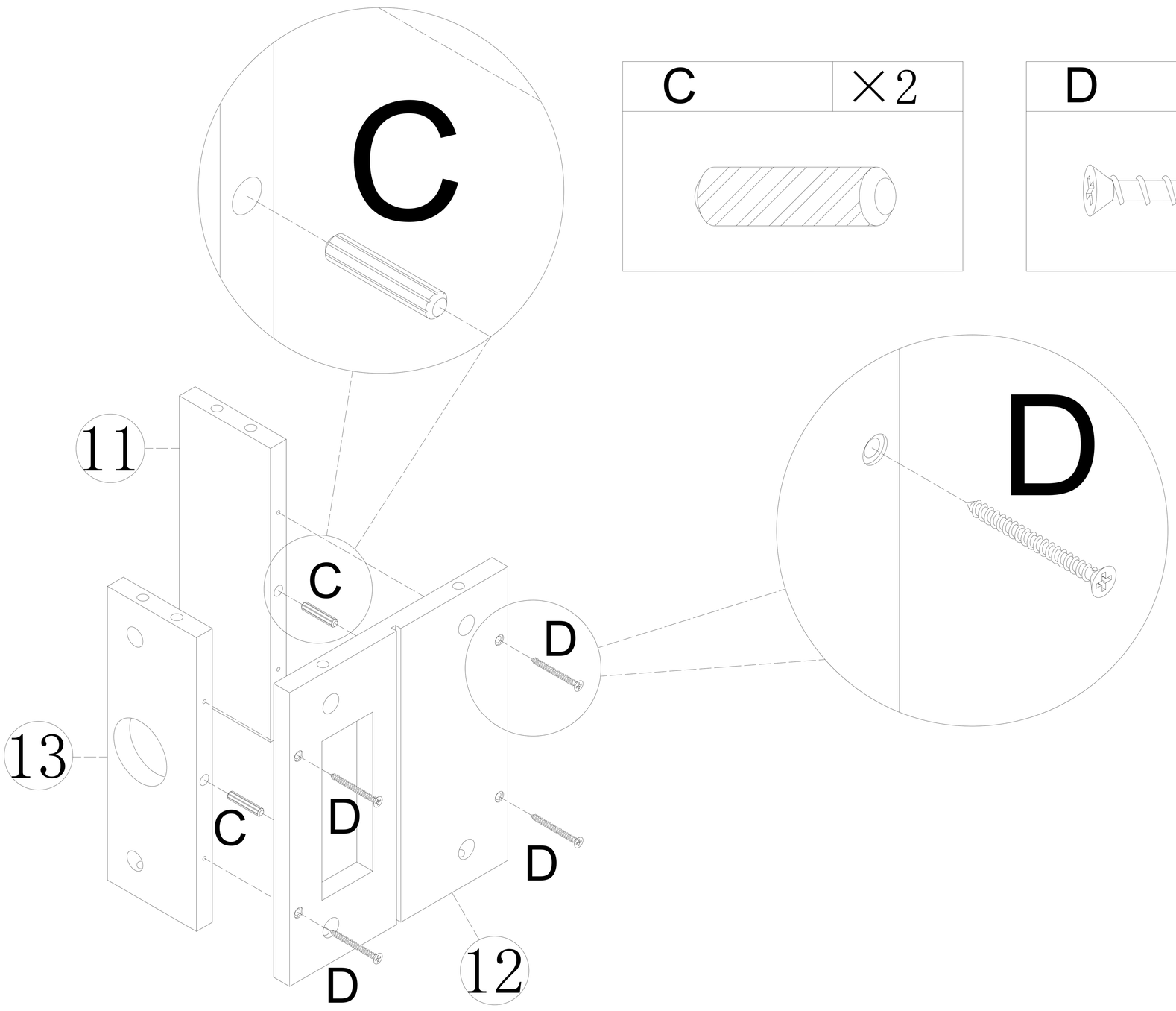

C	×2

D	×4

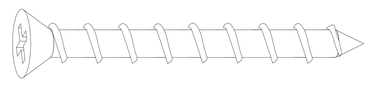

Step 3

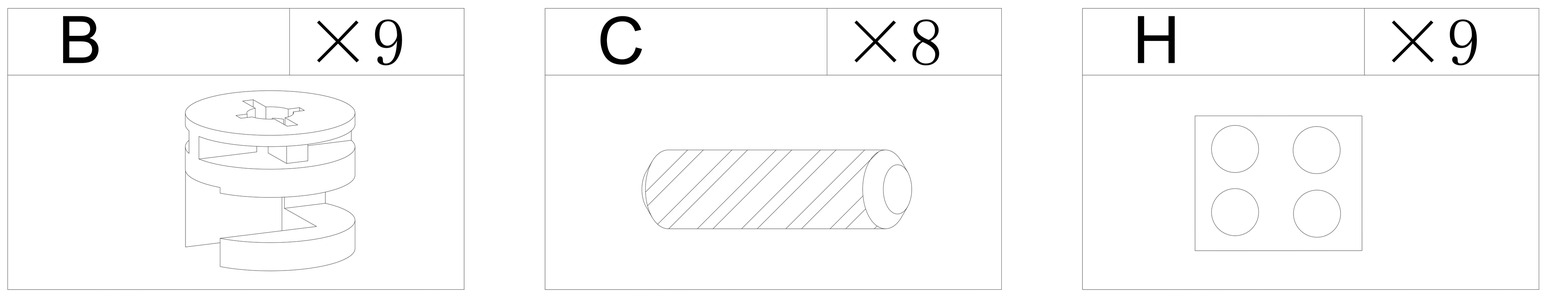

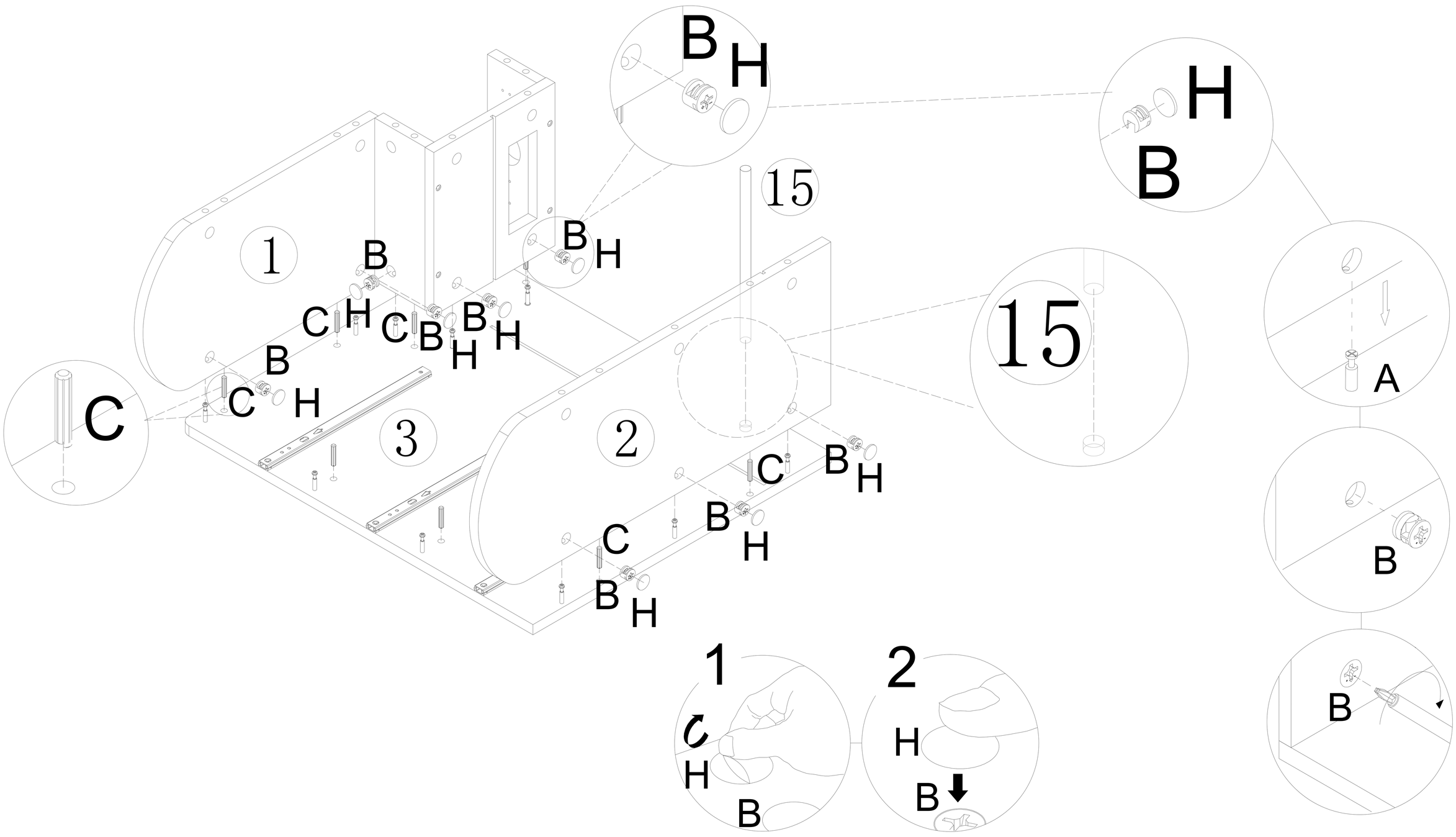

Step 4

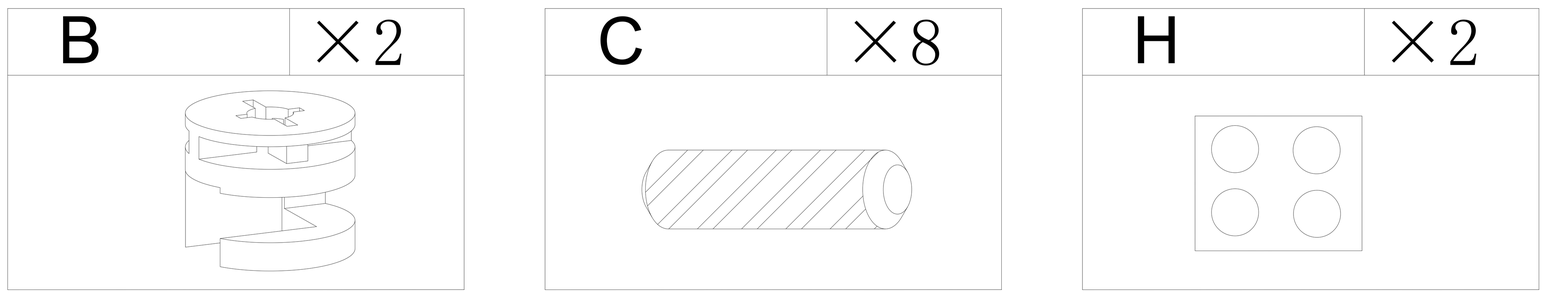

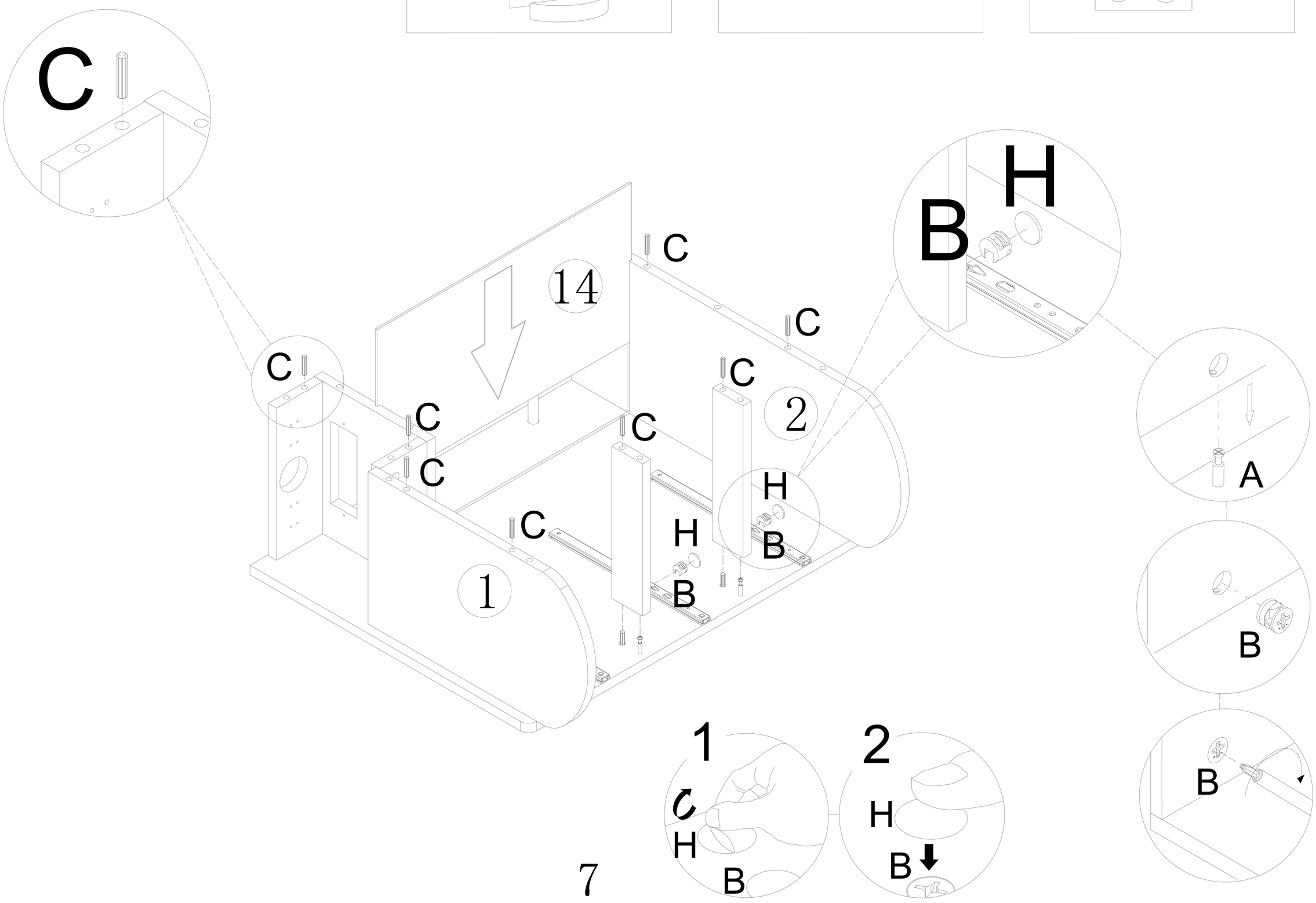

Step 5

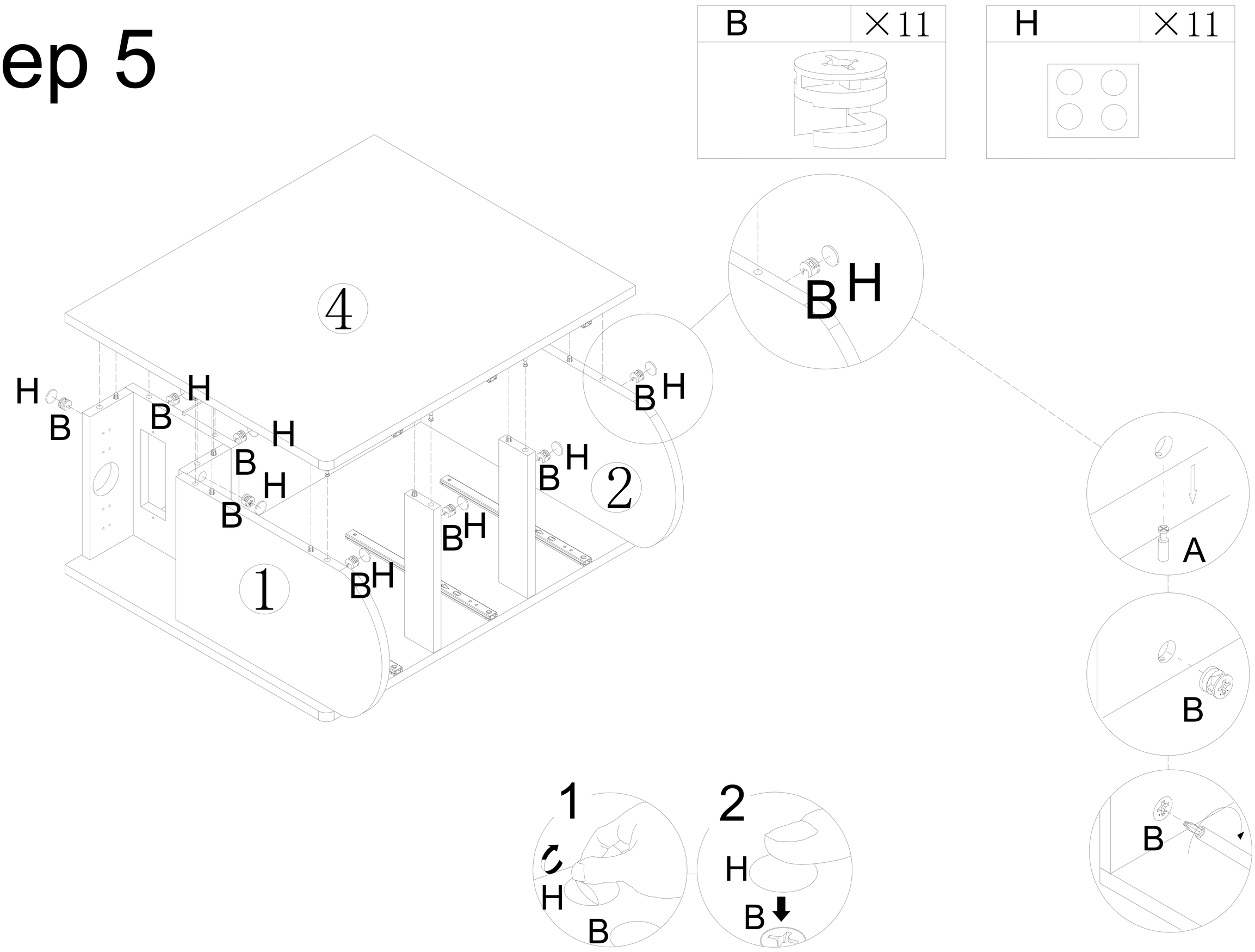

Step 6

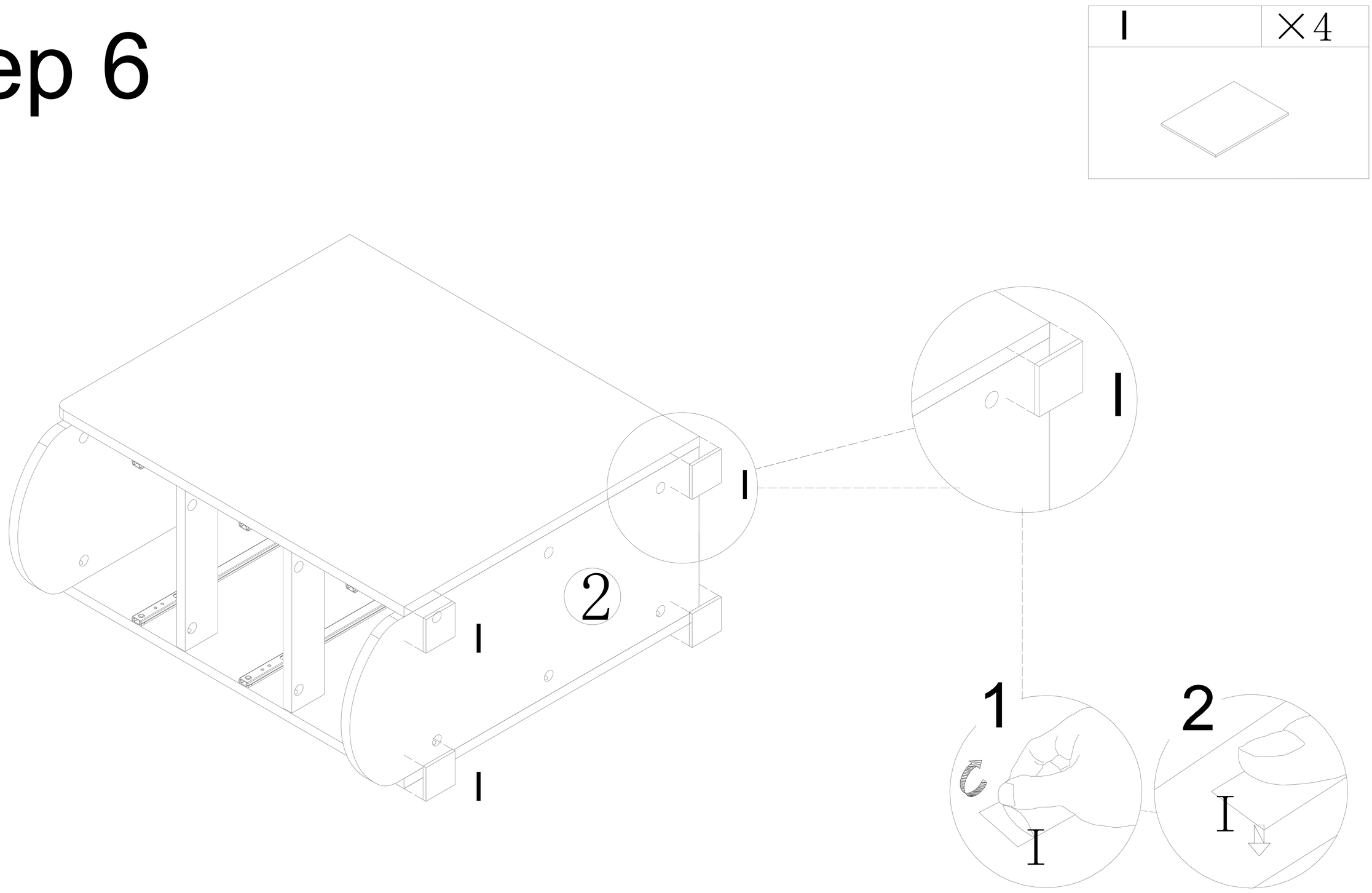

Step 7

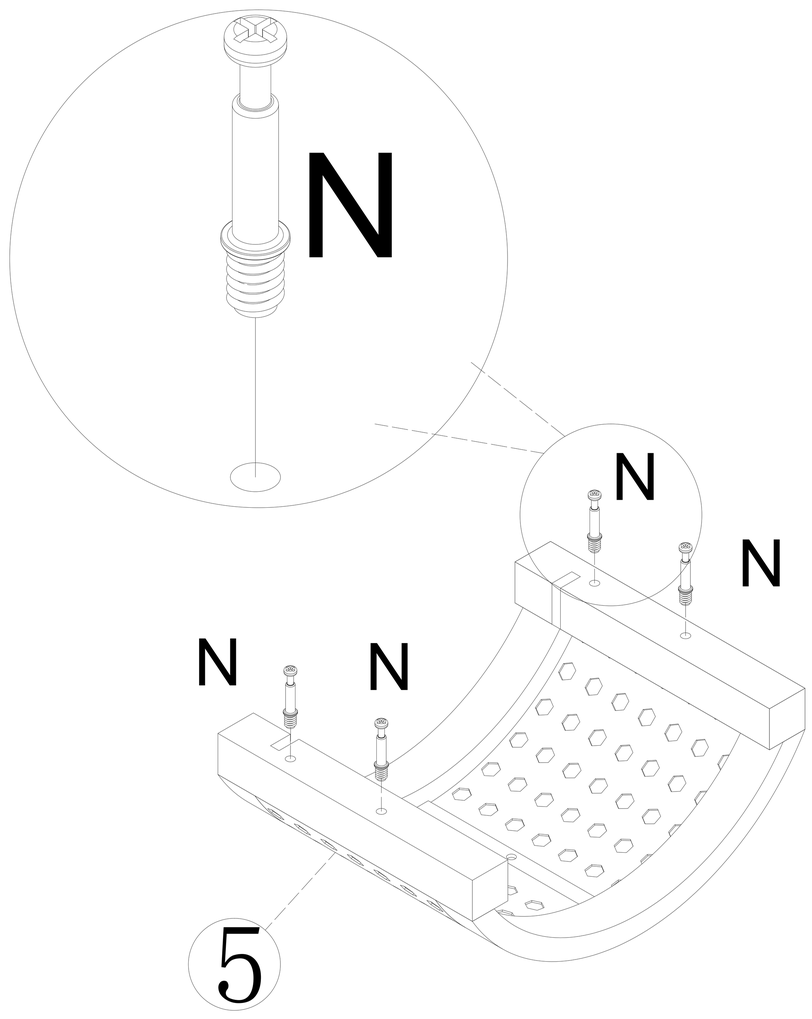

N	×12

X3

Step 8

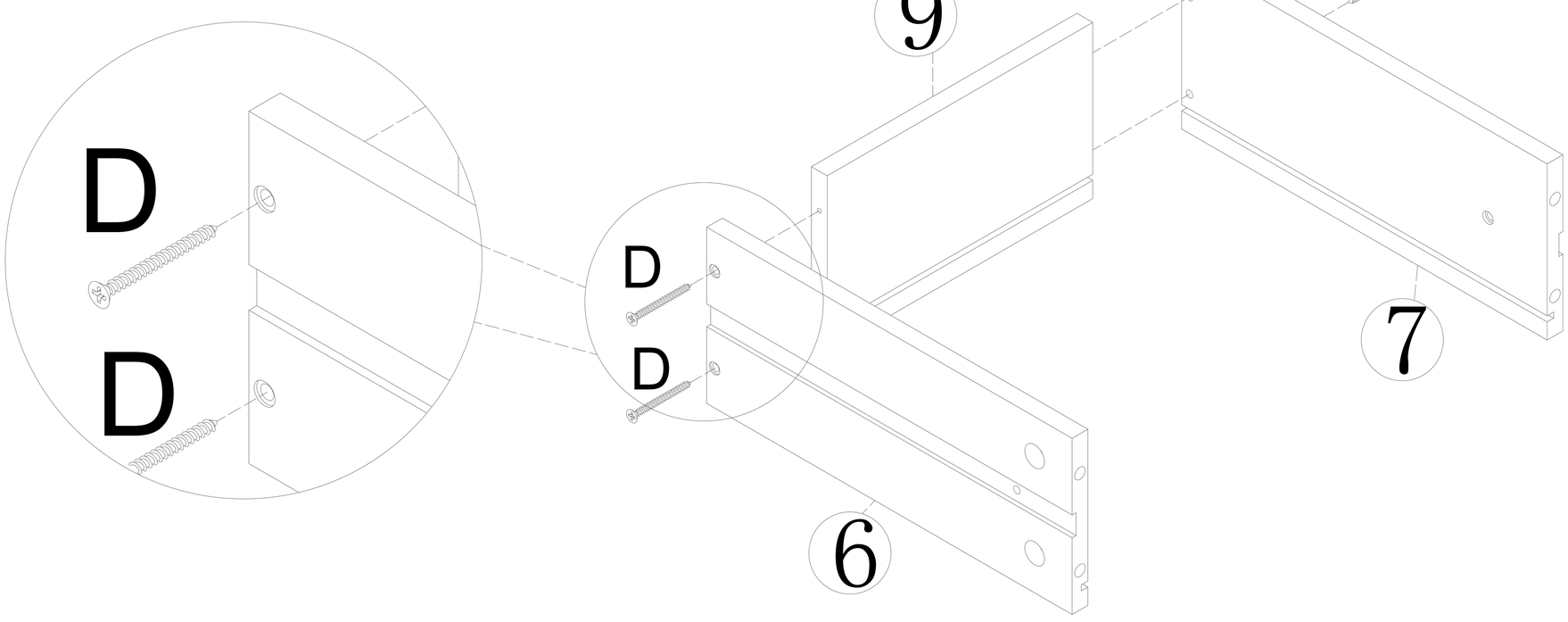

D	×12

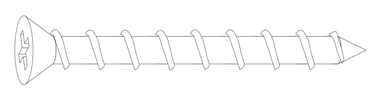

X3

Step 9

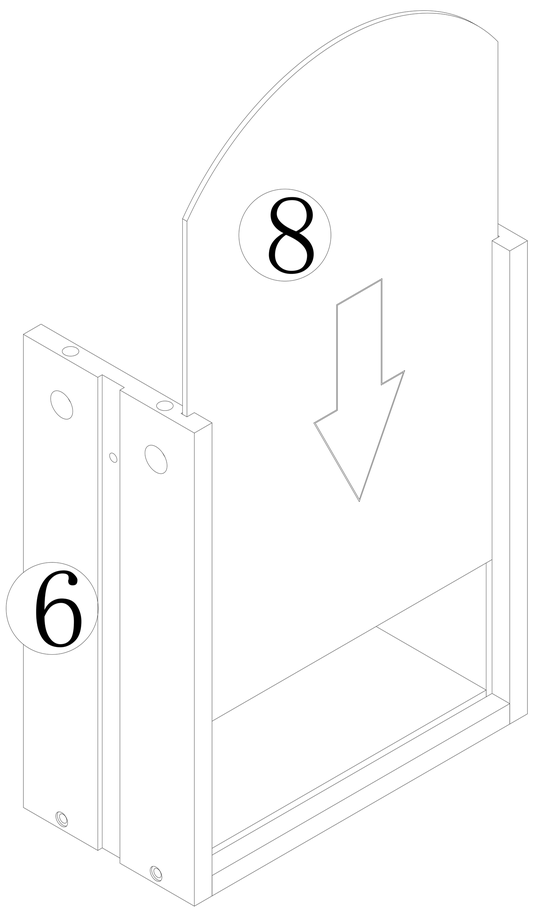

X3

Step 10

B	×12

H	×12

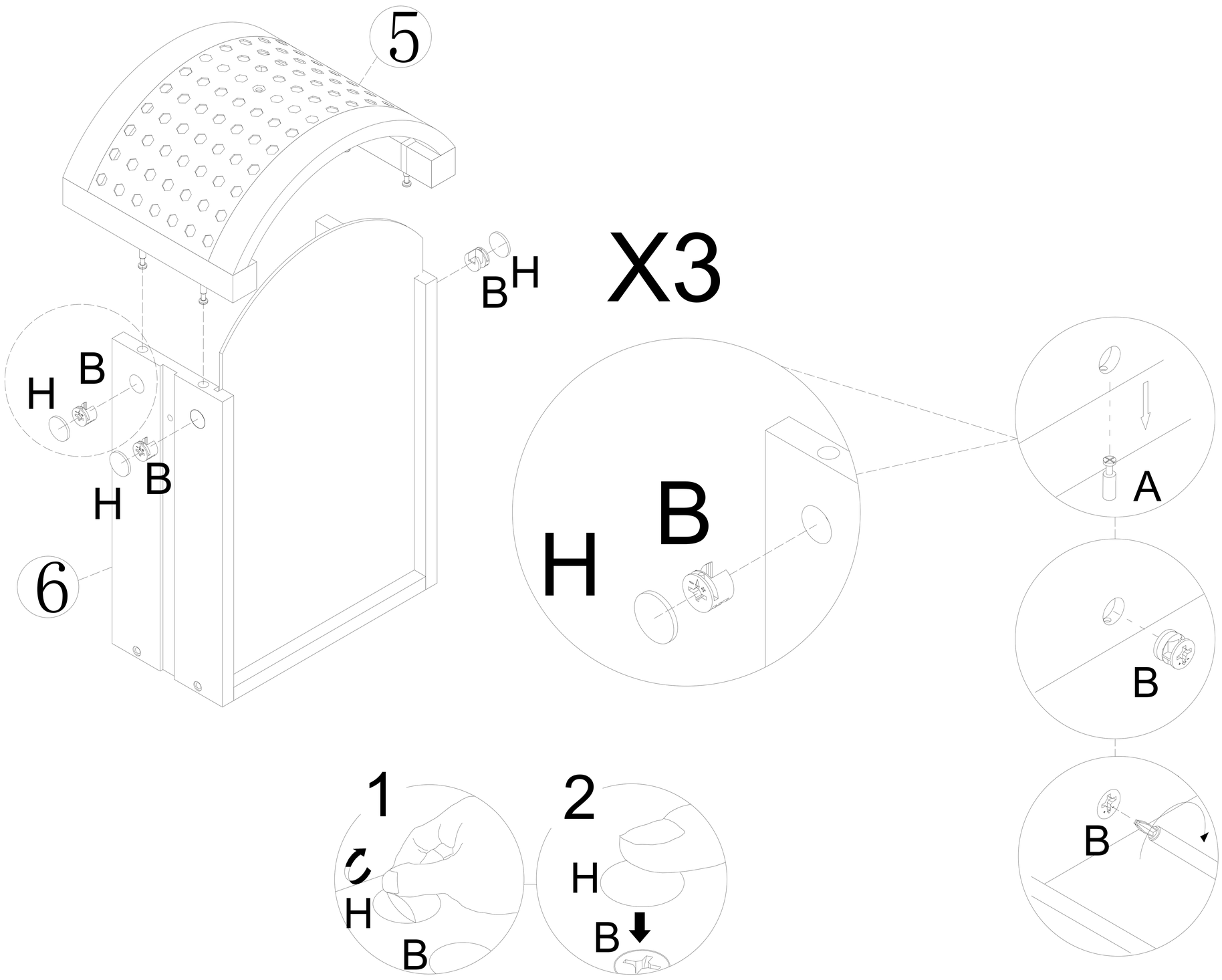

Step 11

O	×3

J	×3

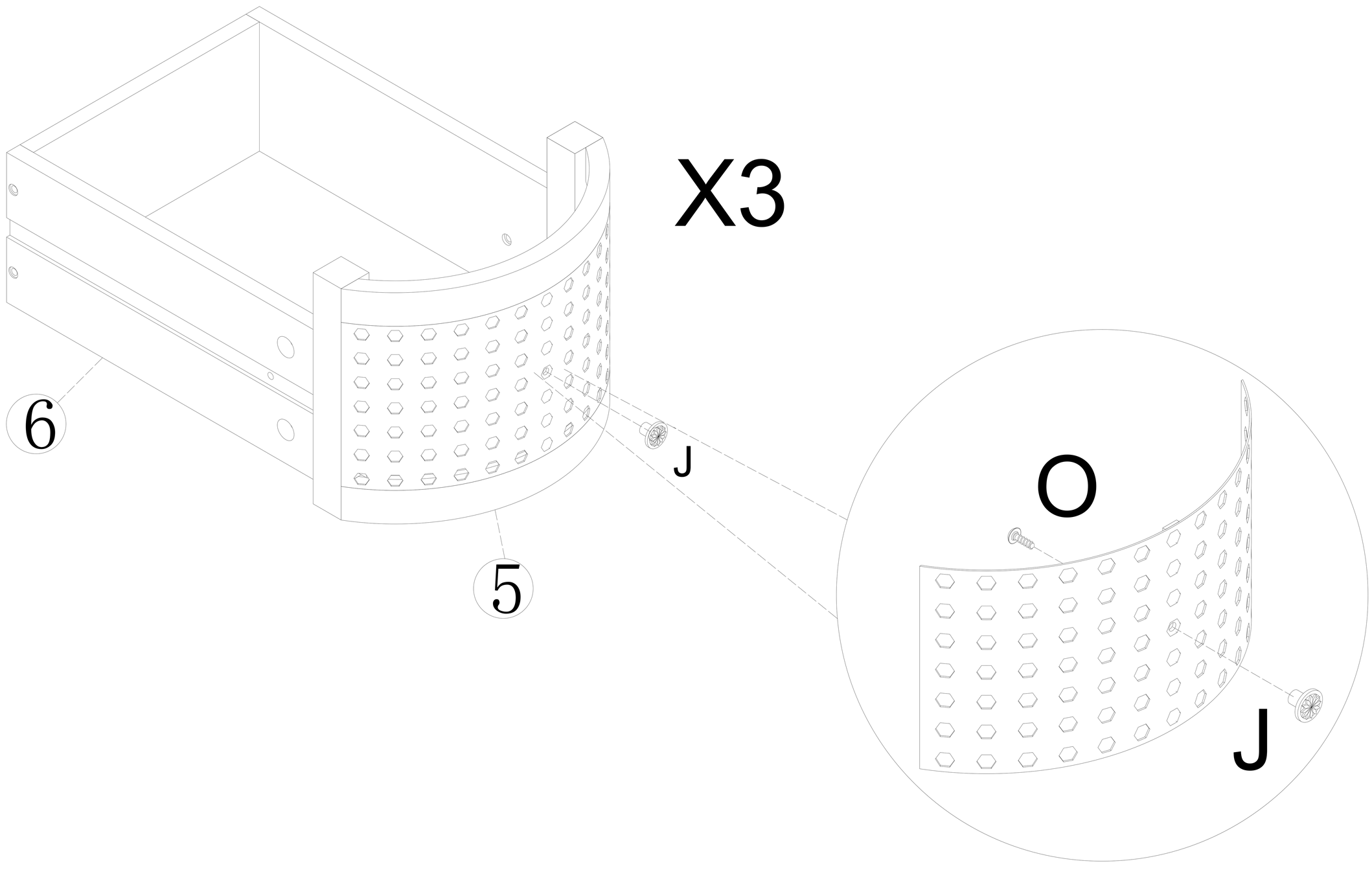

Step 12

G	×4

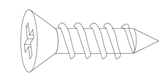

M	×2

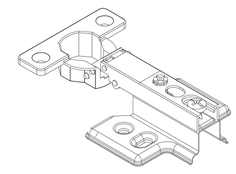

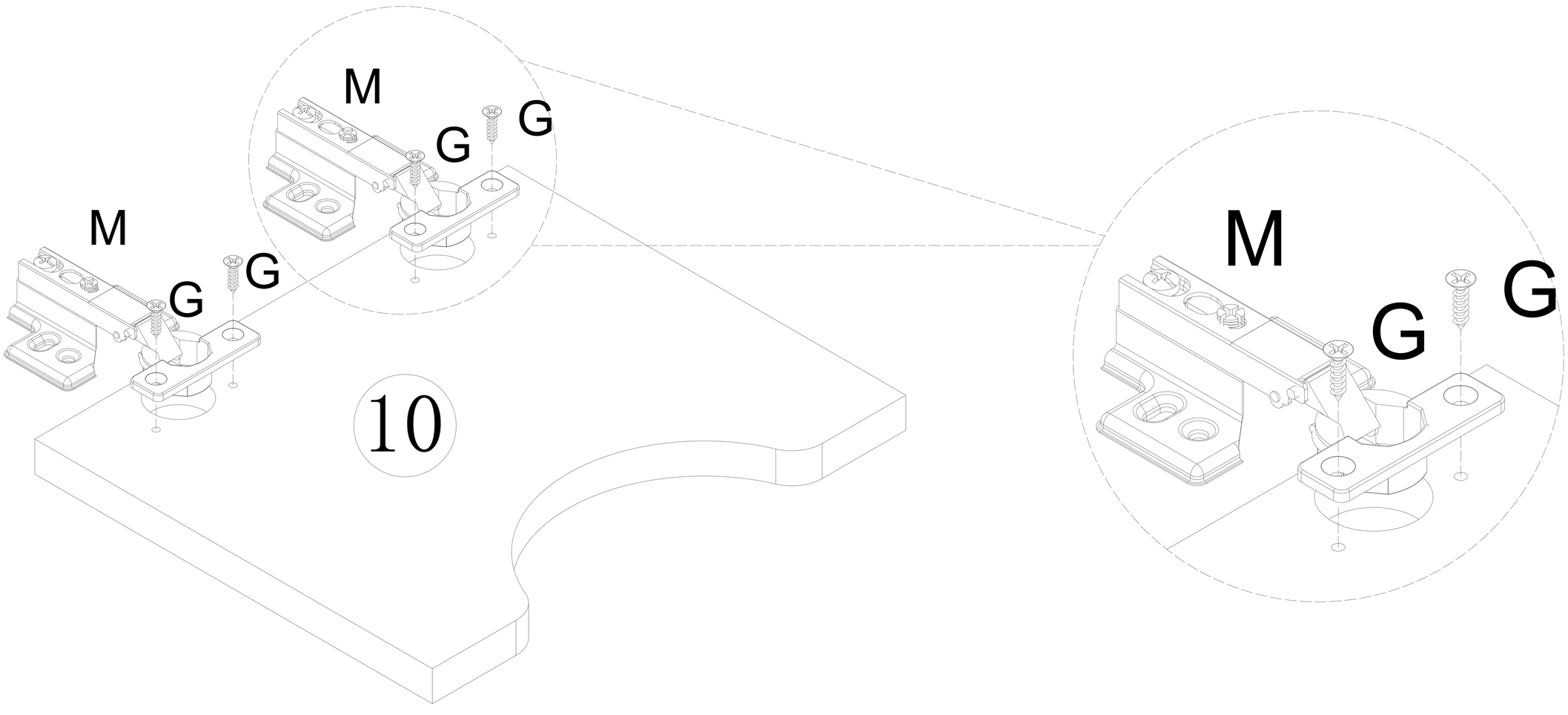

Step 13

G	×2

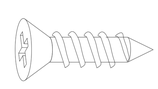

L	×1

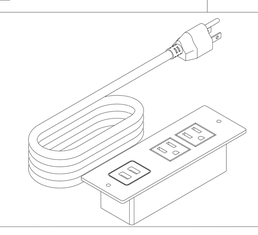

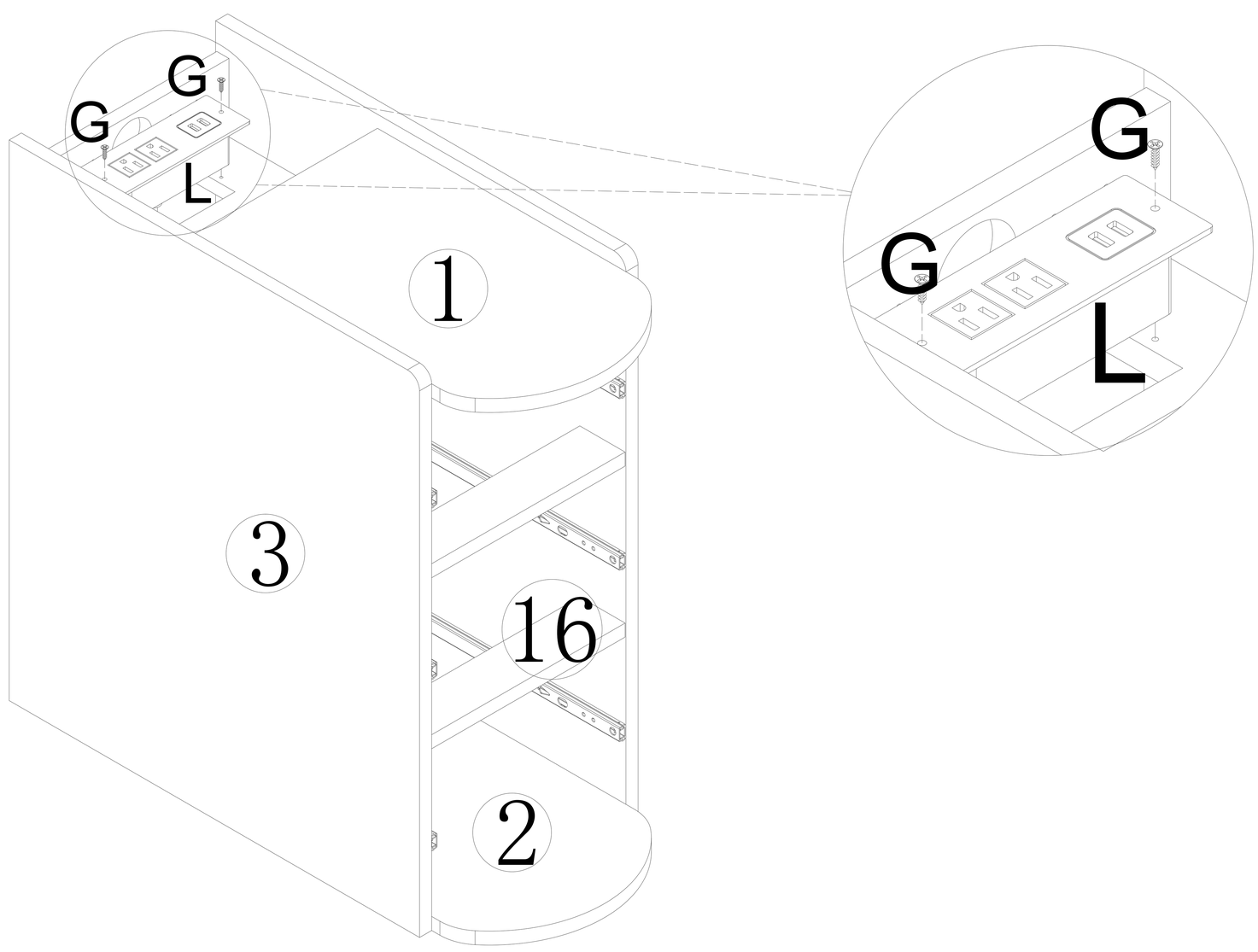

Step 14

G	×8
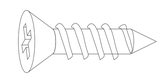	

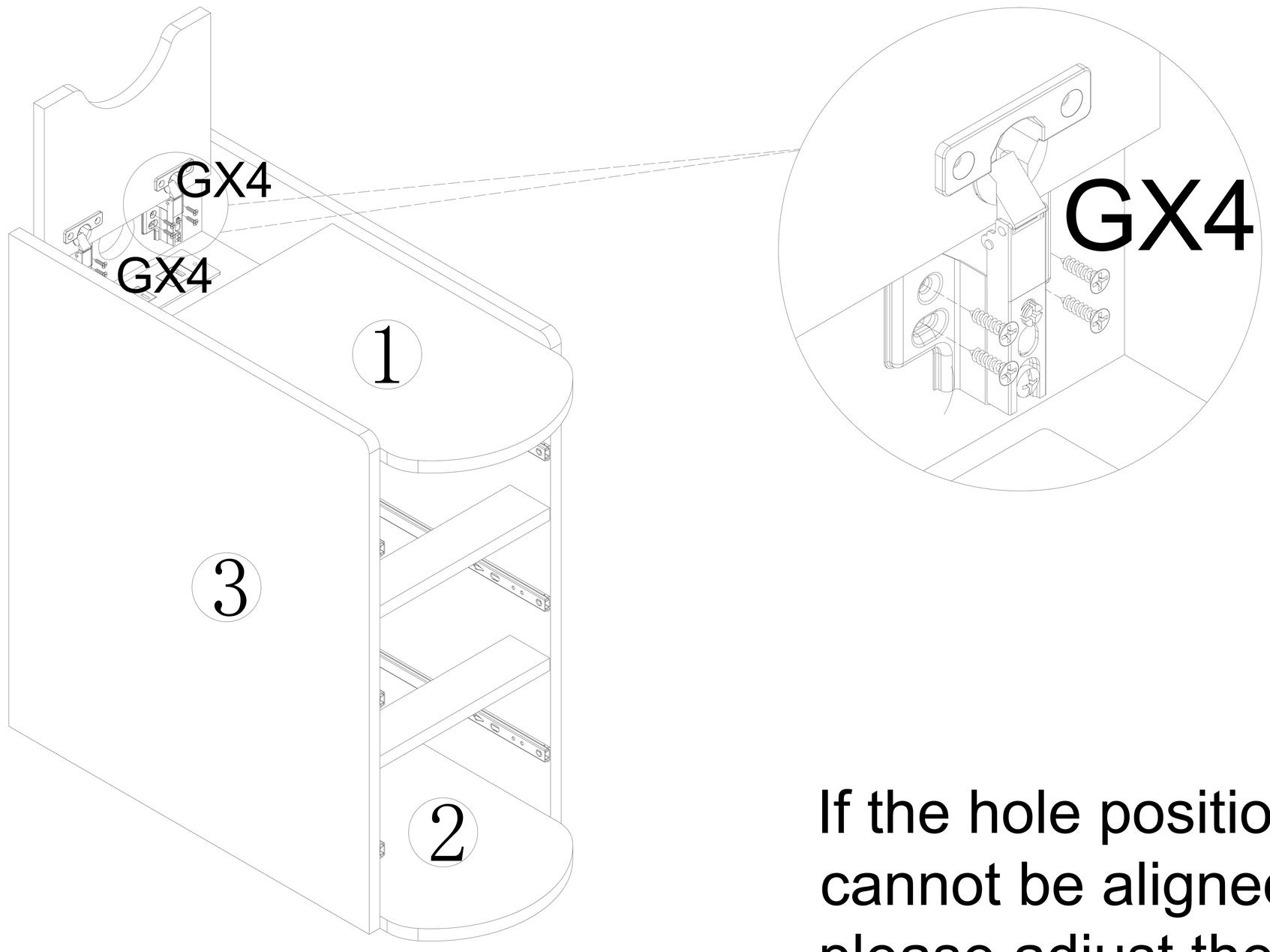

If the hole positions cannot be aligned, please adjust the hinge up and down first.

How do l get the door to align flat by adjusting the hinges?

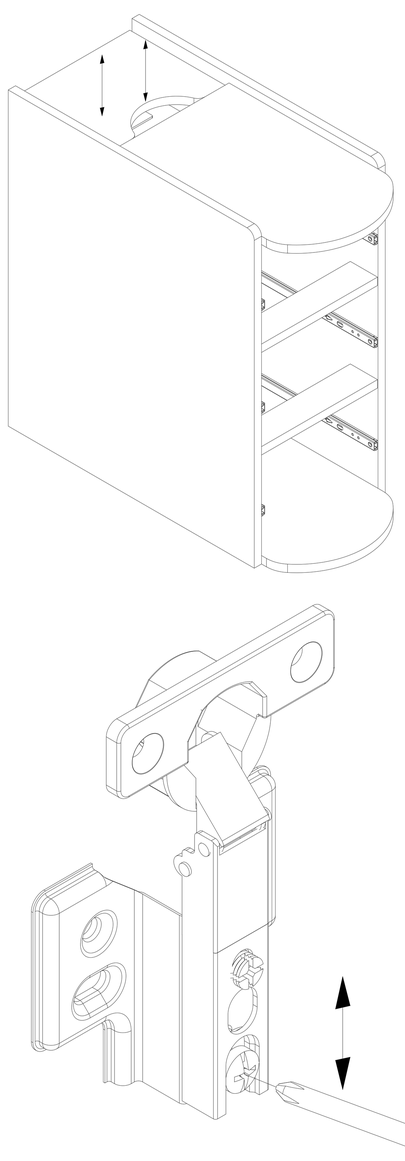

1.The screws can be loosened to adjust the uneven problem under the table top.

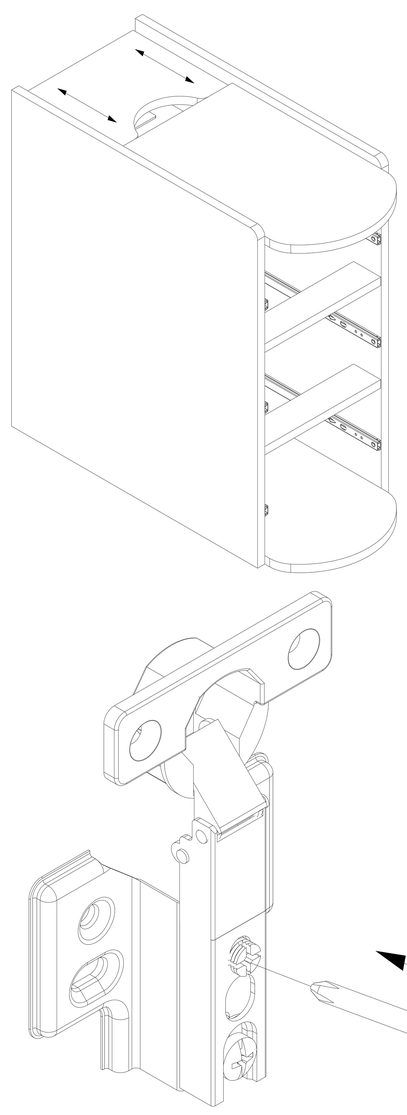

2.Adjust the screws shown inFig.2 and pull the door backand forth so that it can beopened smoothly.

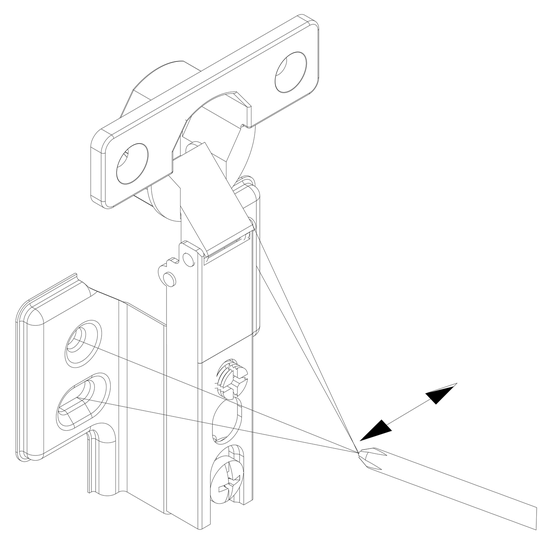

3.Adiust the screws shown inFiqure 3 to adjust the door leftand right to the right position.

Step 15

E	×6

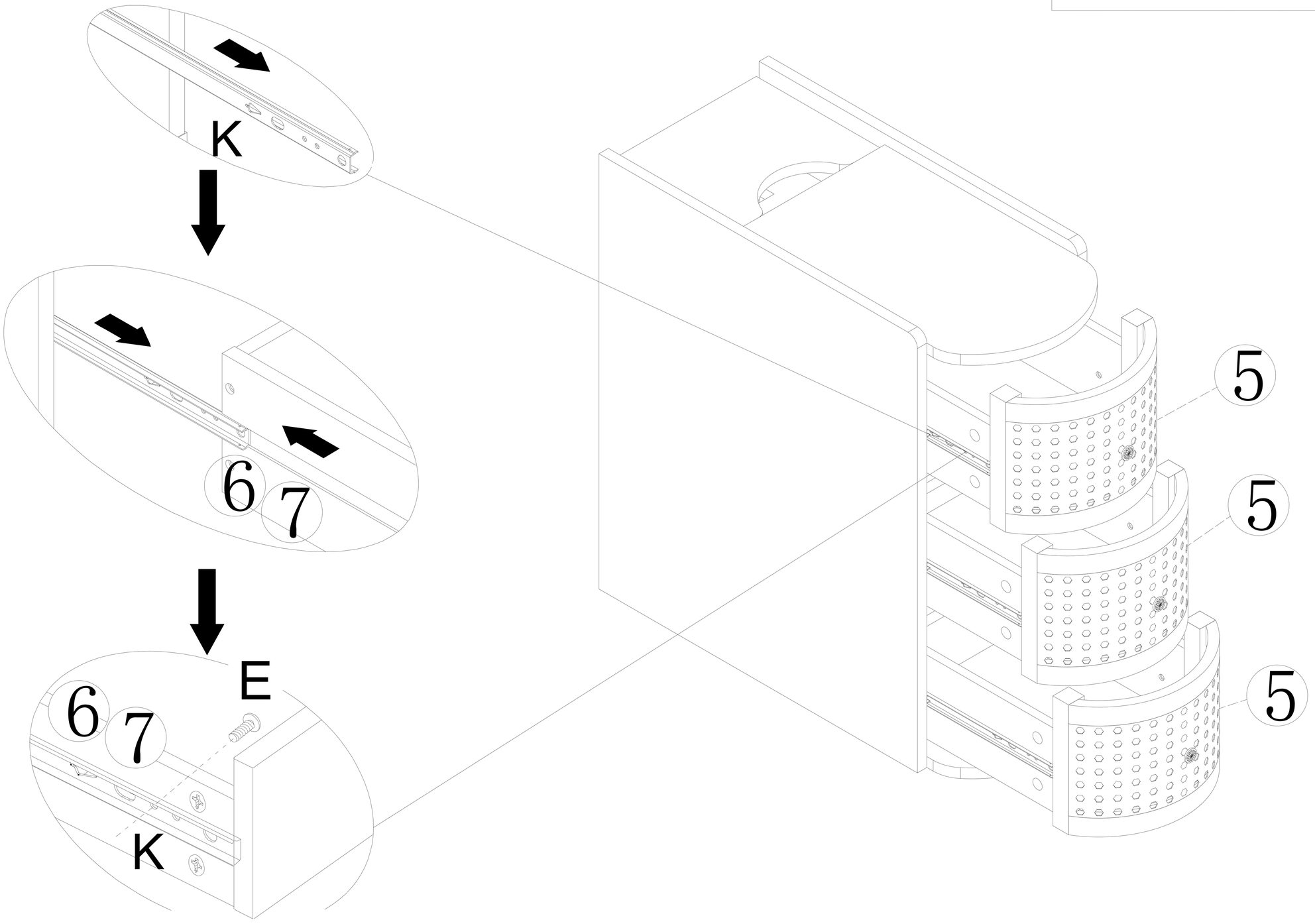

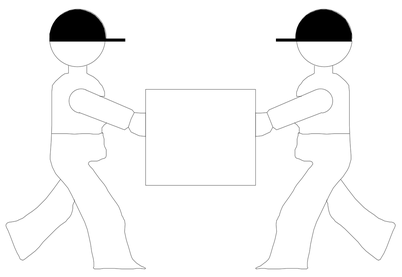

Two people work together to move the table.
Make sure you lift it off the ground.
Don’t push and pull.