ASSEMBLY INSTRUCTIONS

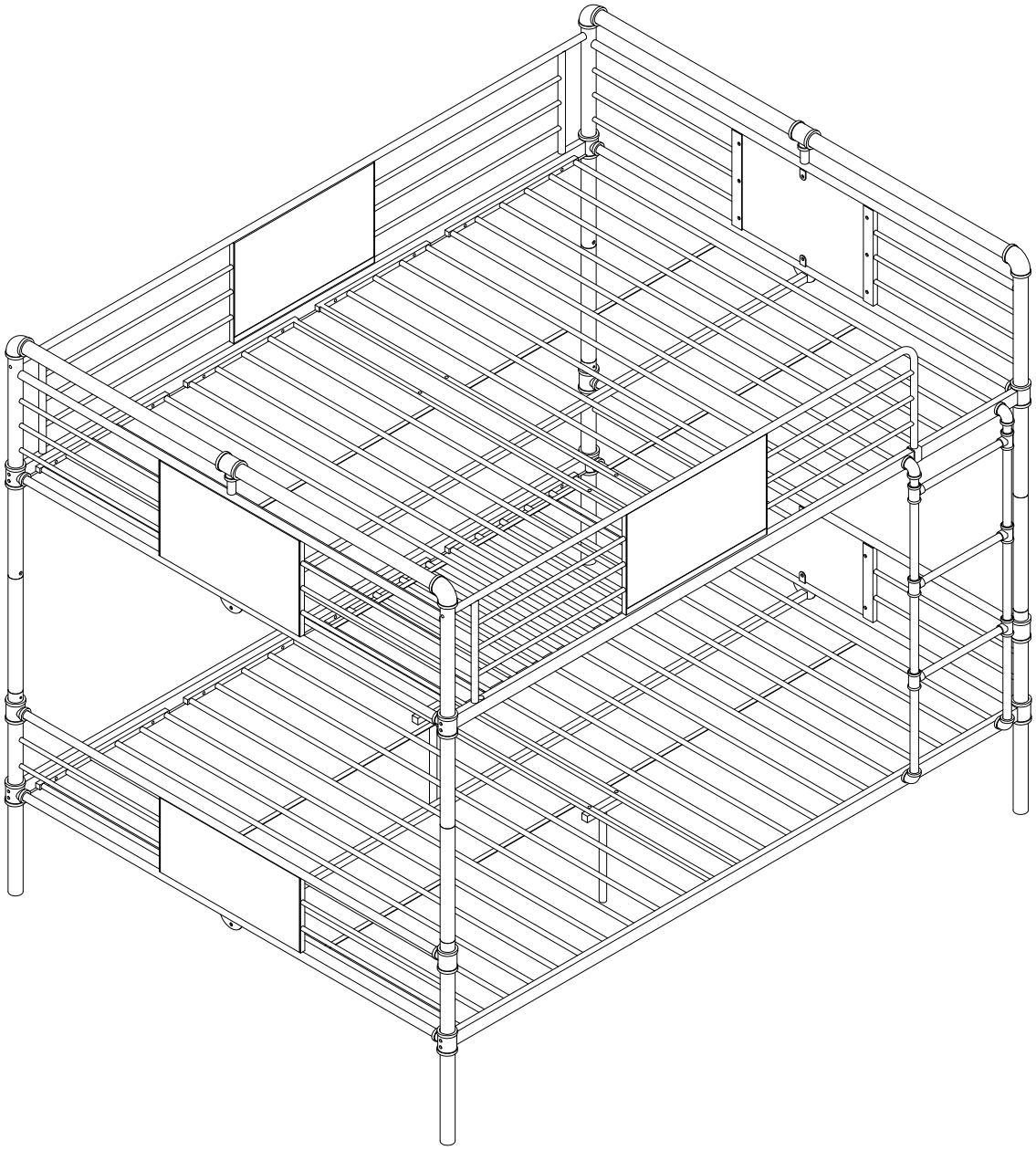

PARTS IDENTIFICATION

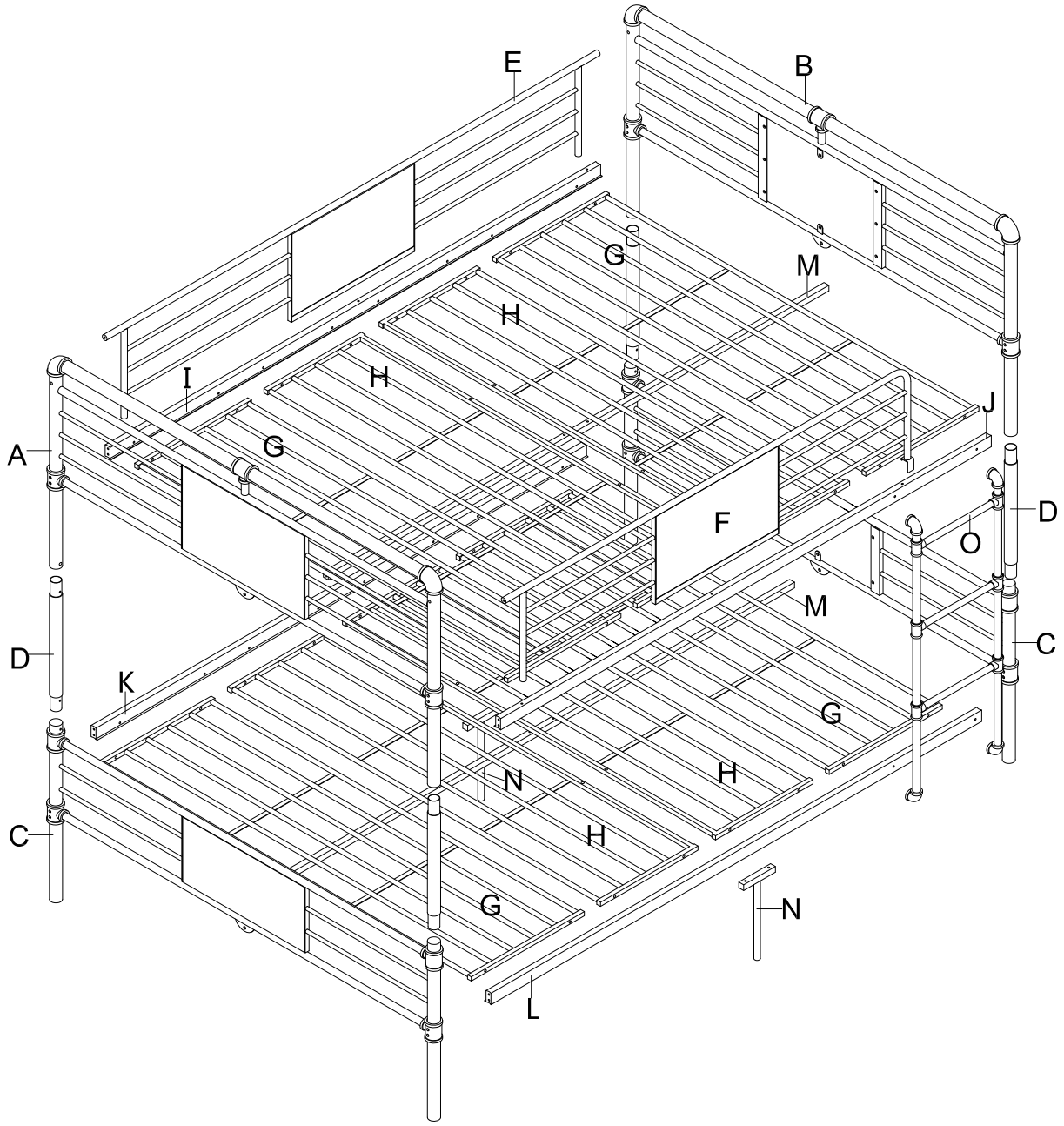

PARTS IDENTIFICATION

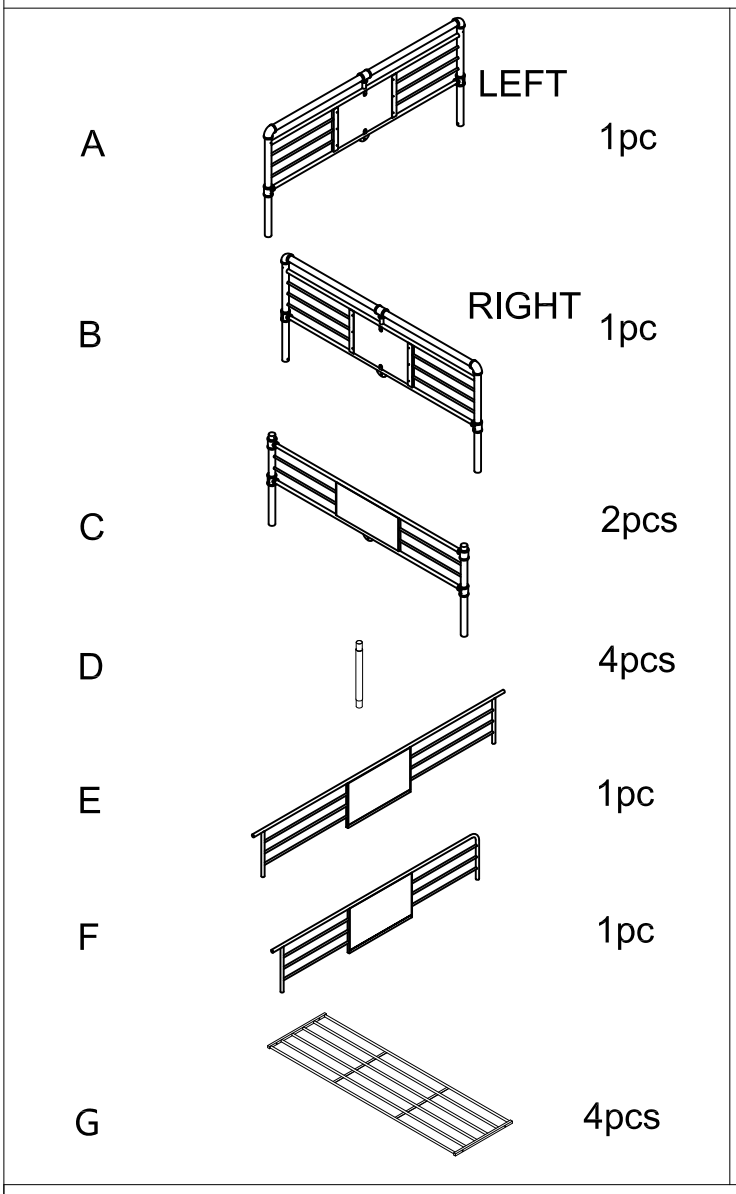

HARDWARE LIST

1 M6x15 8pcs	2 M6x25 44pcs	3 M6x30 4pcs
4 M6x35 4pcs	5 M6x50 6pcs	6 M6x75 19pcs
7 ∅38 8pcs	8 4X4 1pc	

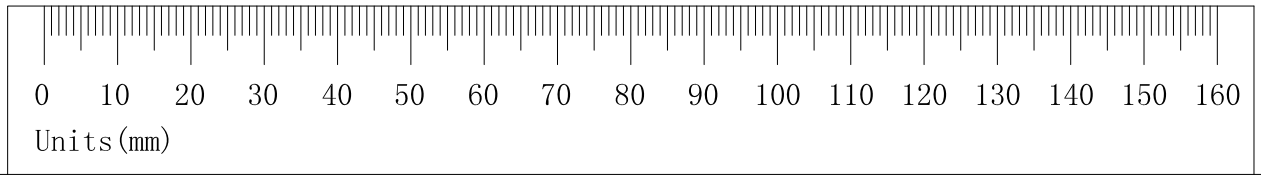

STEP 1.

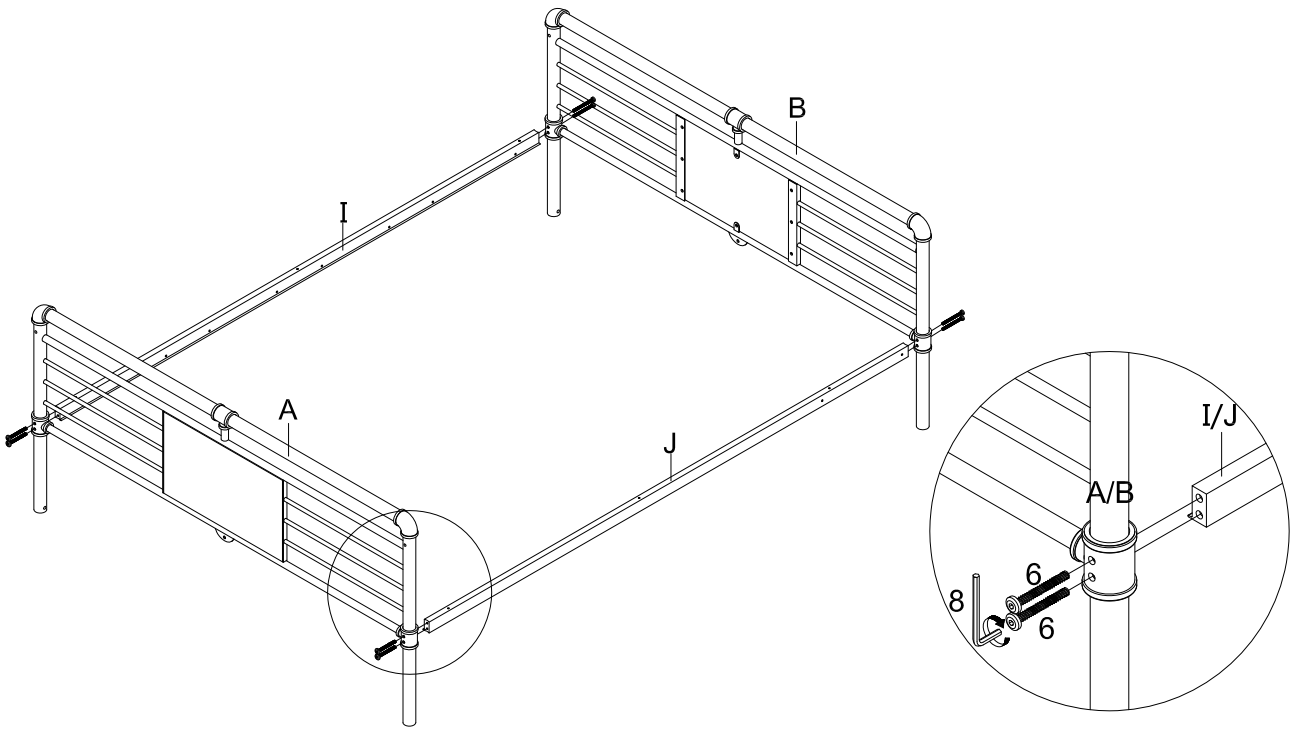

6		
M6x75		8pcs

STEP 2.

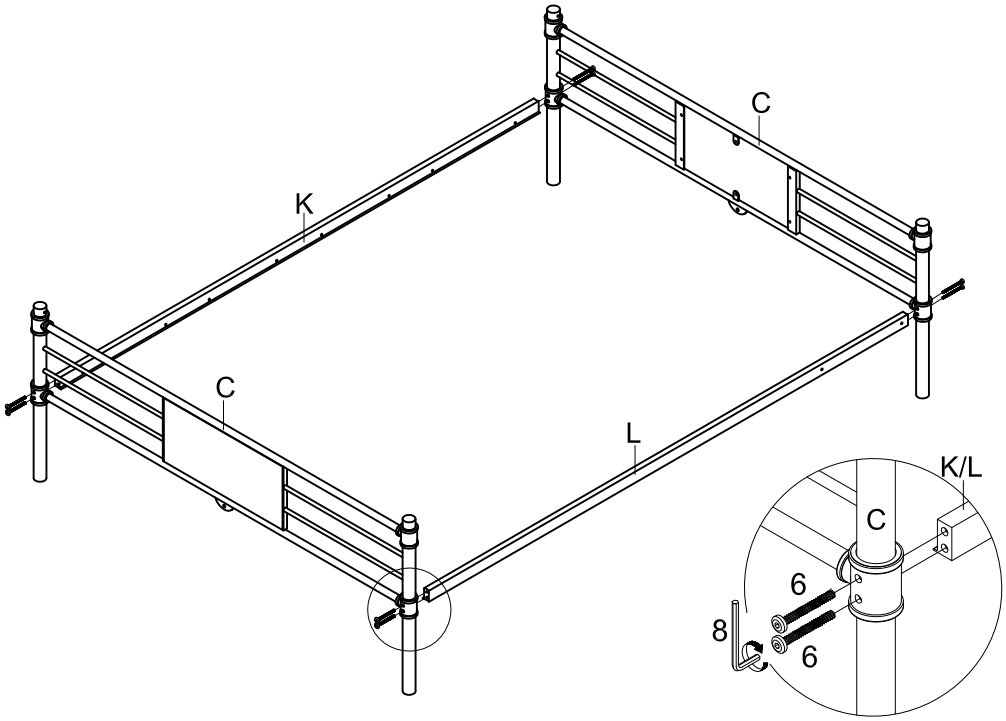

DO NOT TIGHTEN THE SCREWS UNTIL ASSEMBLING THE FINAL STEP.

6		
M6x75		8pcs

STEP 3.

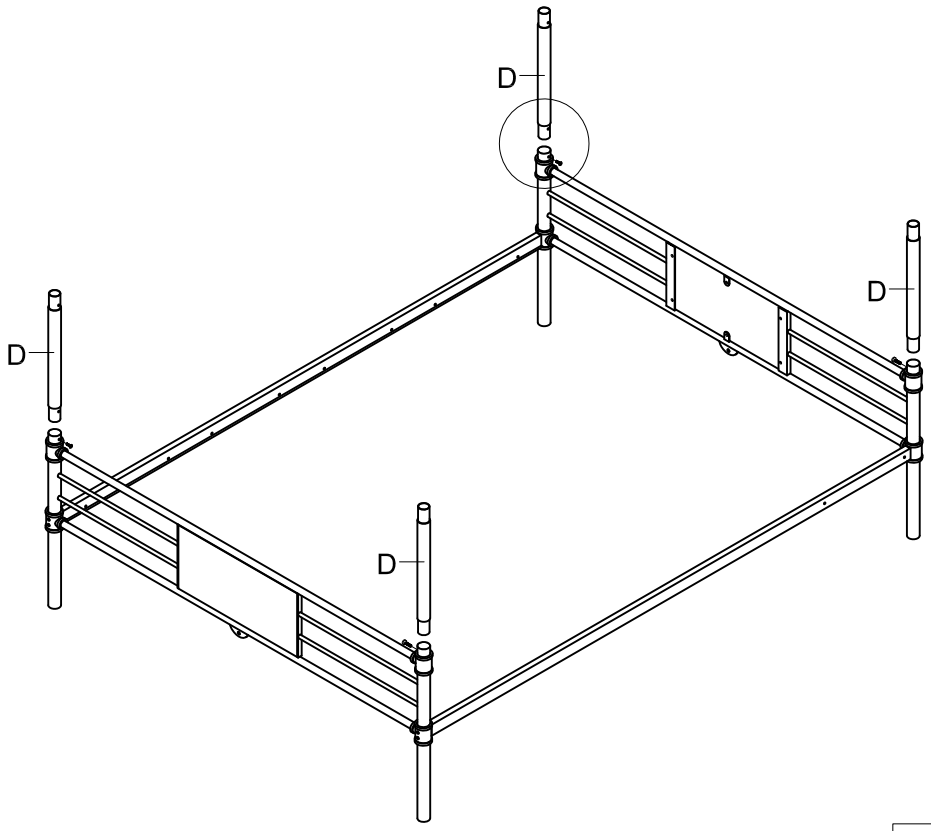

3-1

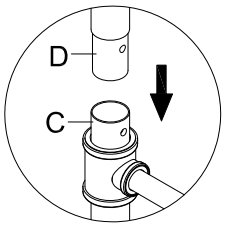

3-2

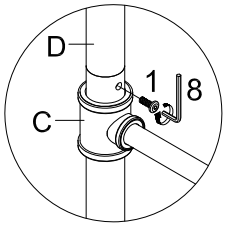

1		
M6x15		4pcs

STEP 4.

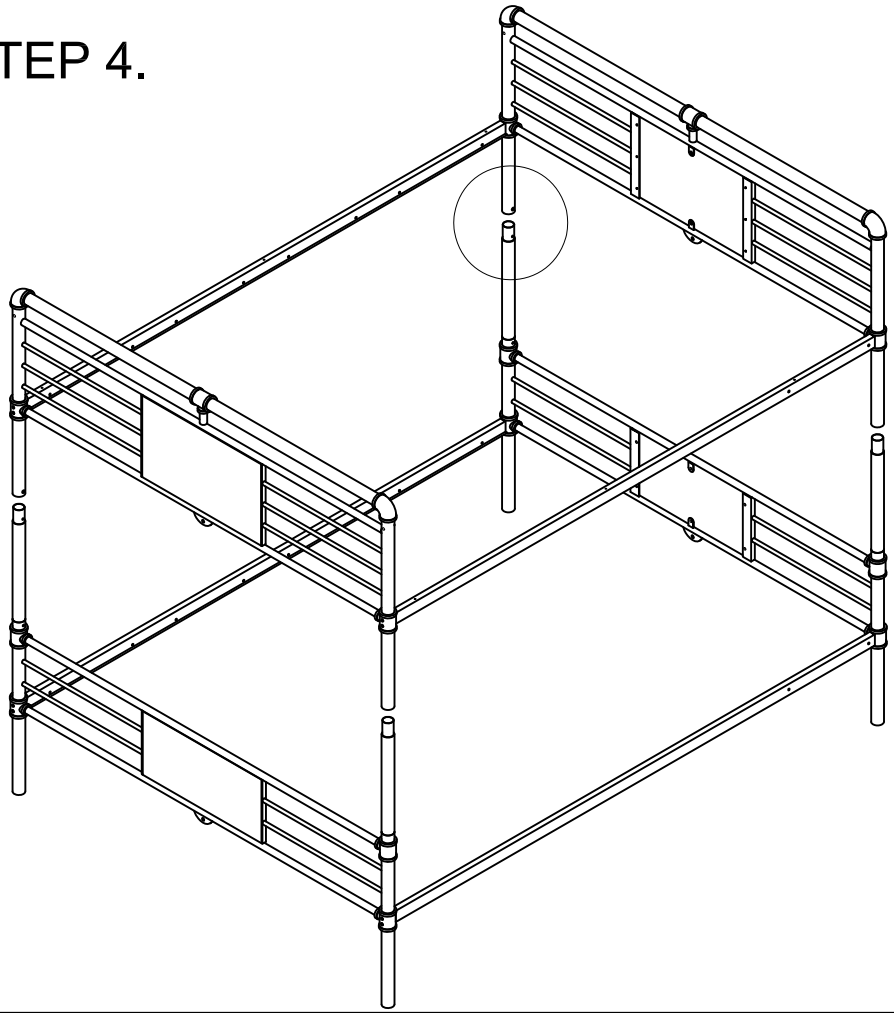

4-1

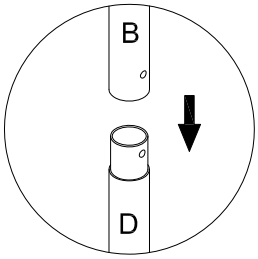

4-2

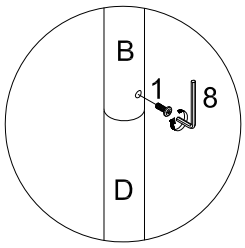

1		
M6x15		4pcs

STEP 5.

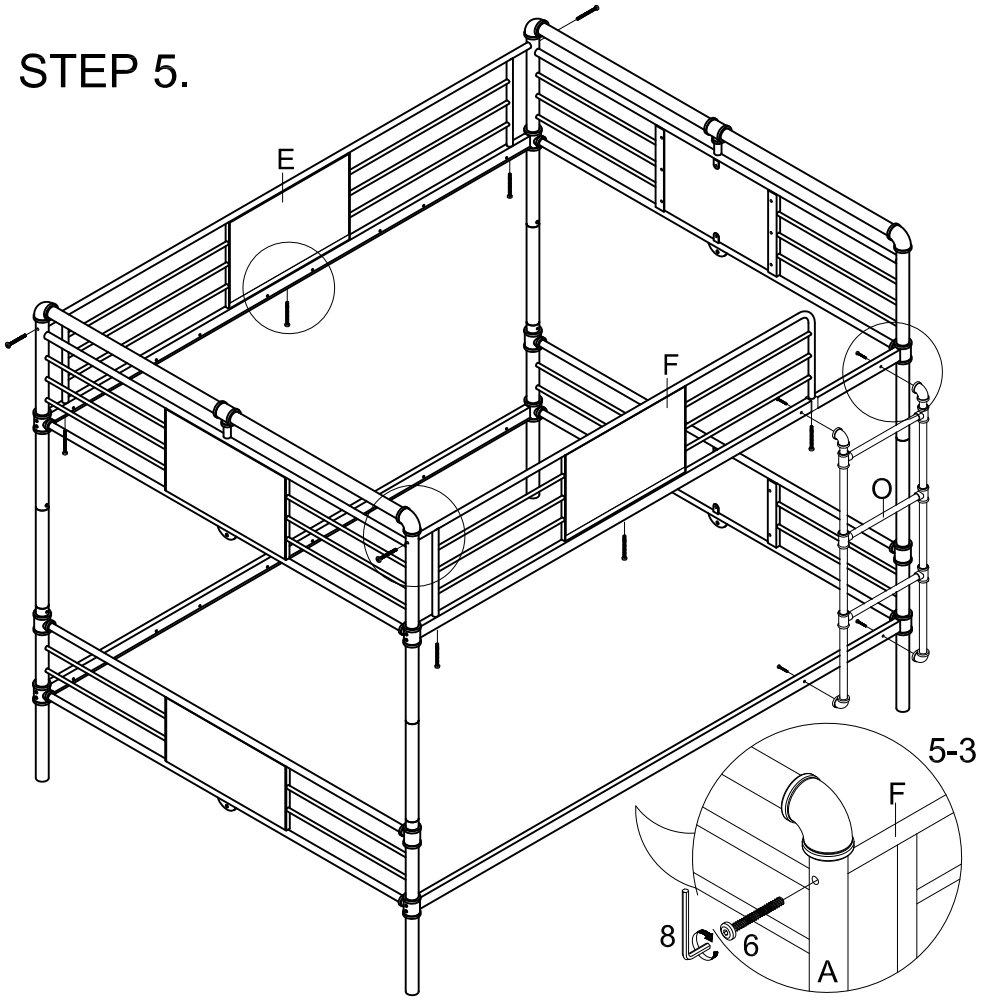

4 M6x35		4pcs
5 M6x50		6pcs
6 M6x75		3pcs

STEP 6.

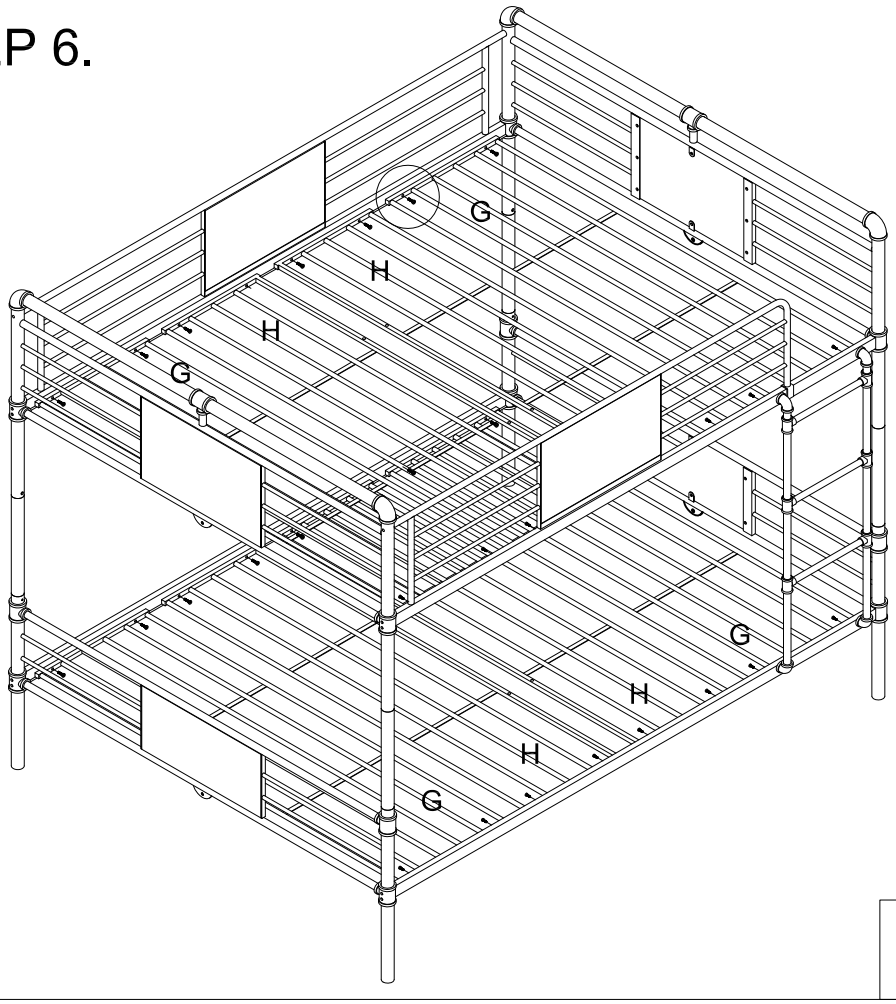

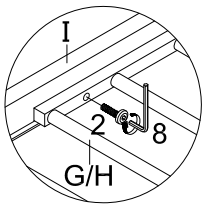

2 M6x25		32pcs

STEP 7.

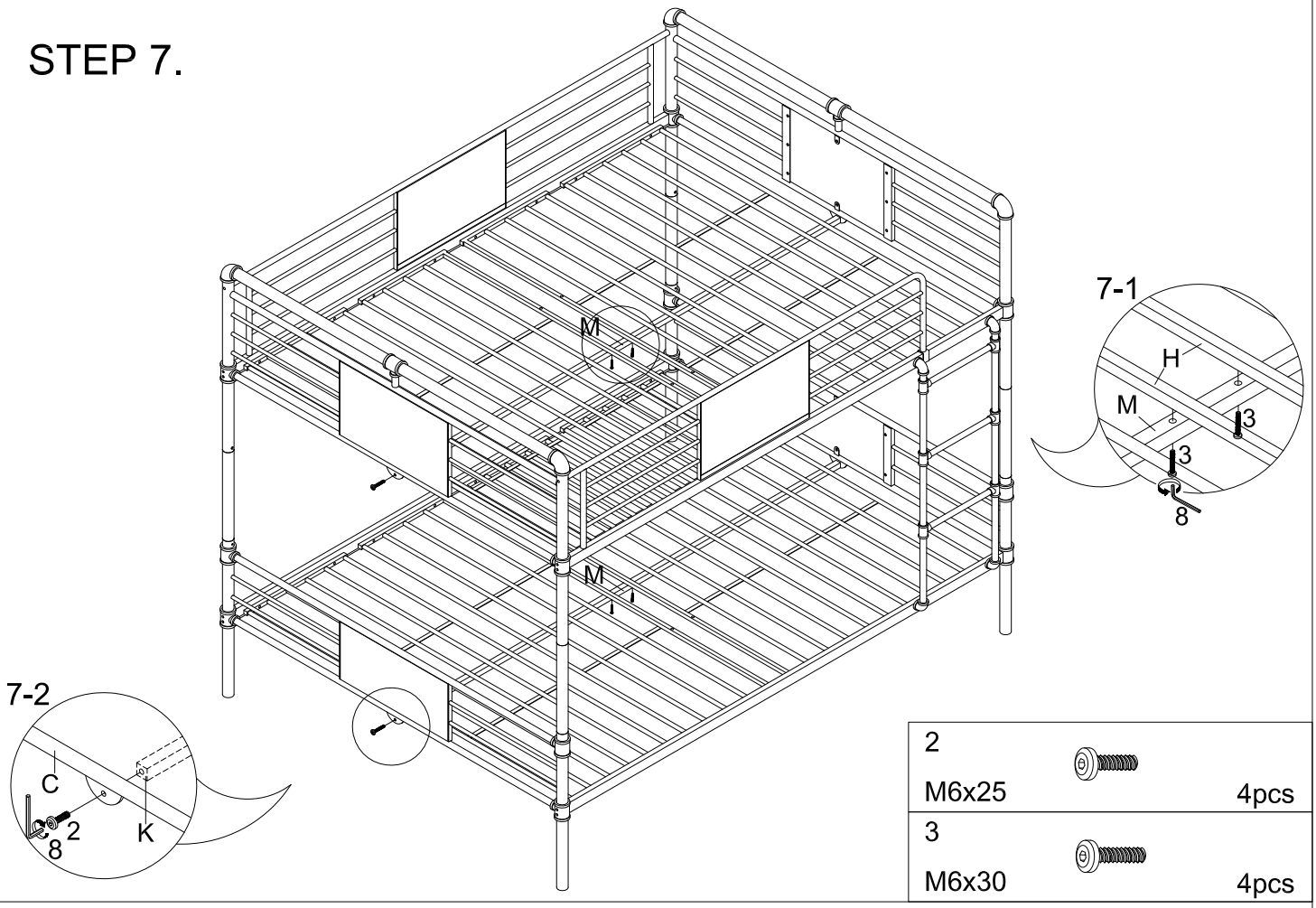

2 M6x25		4pcs
3 M6x30		4pcs

STEP 8.

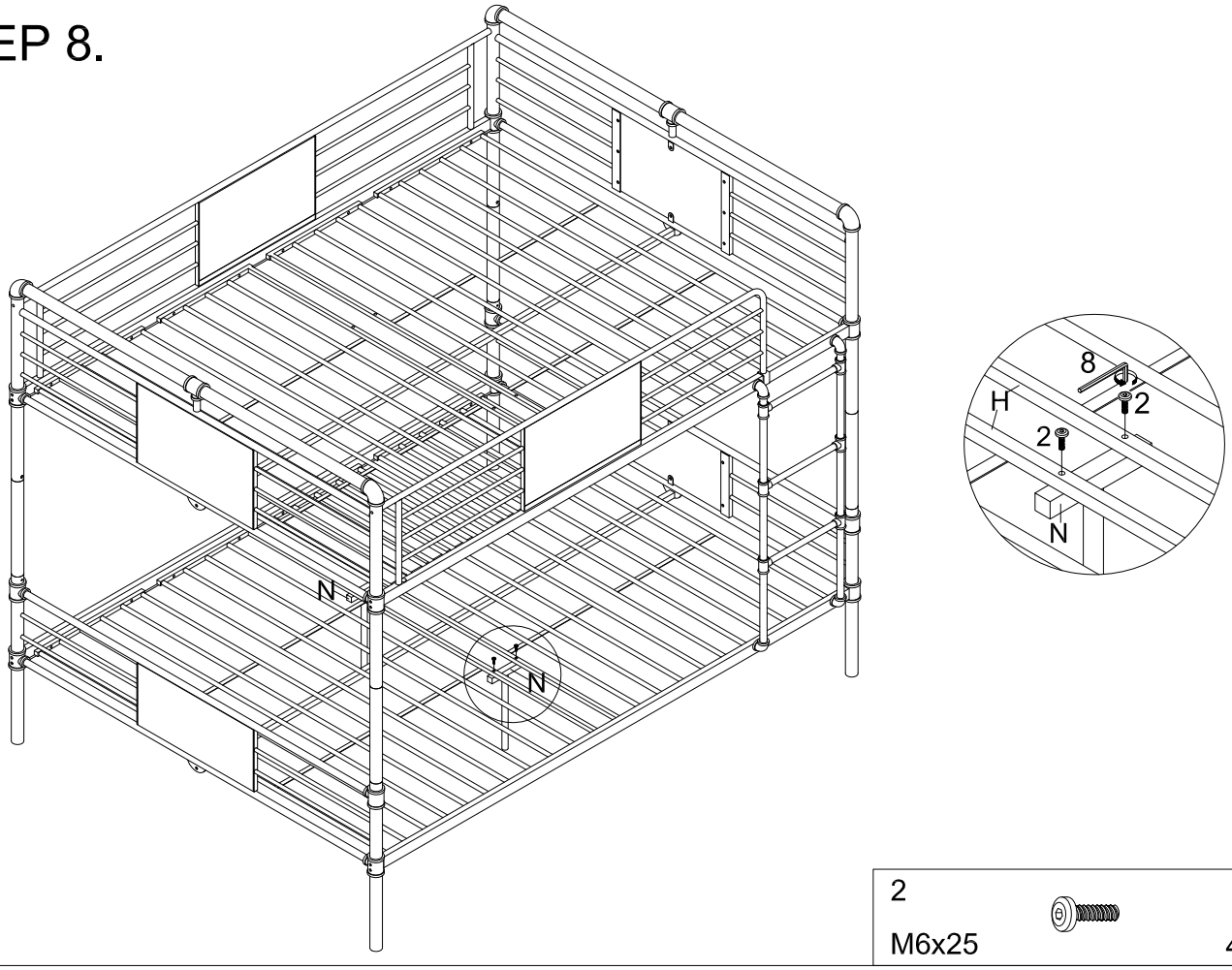

2 M6x25		4pcs

STEP 9.

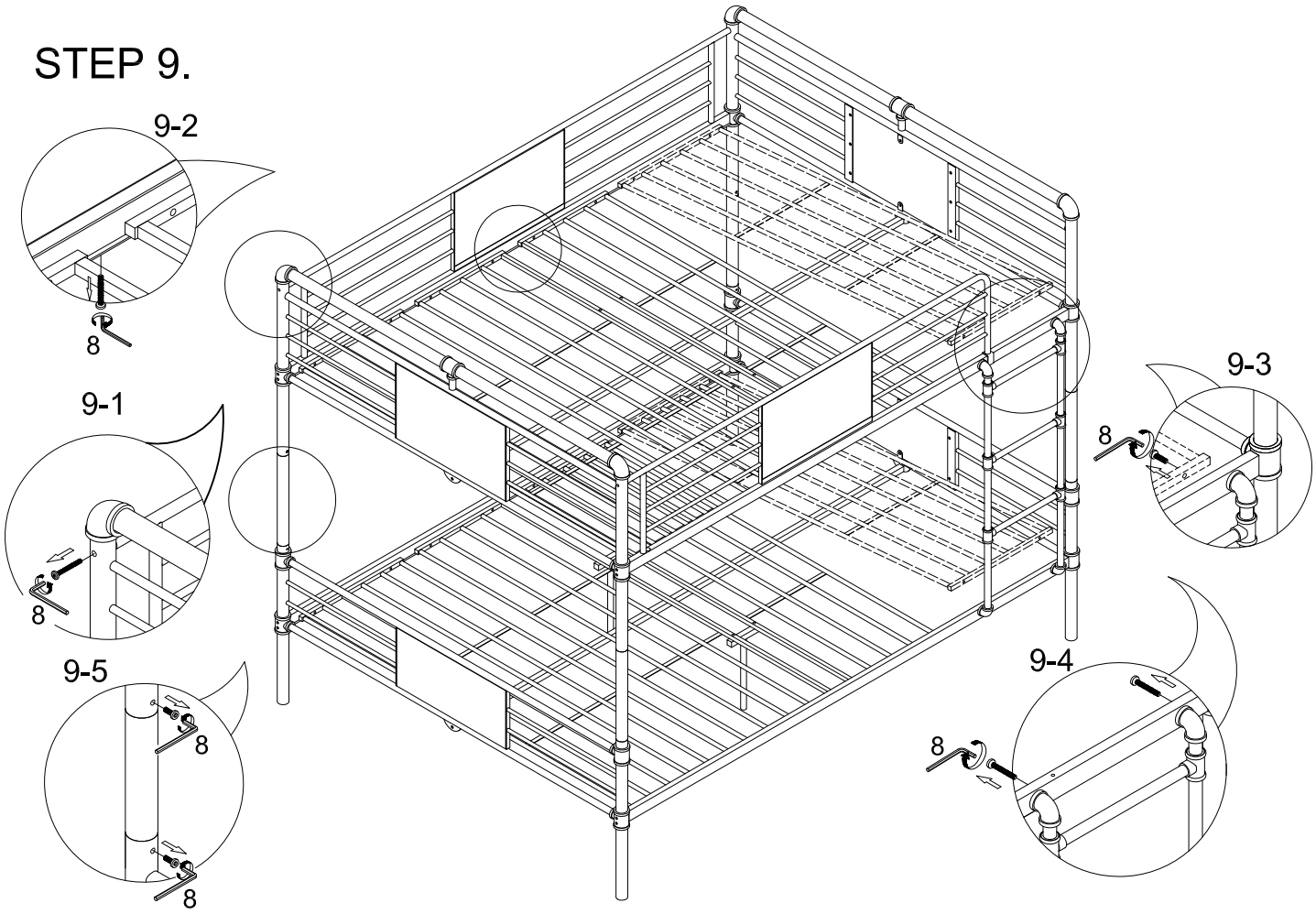

STEP 10.

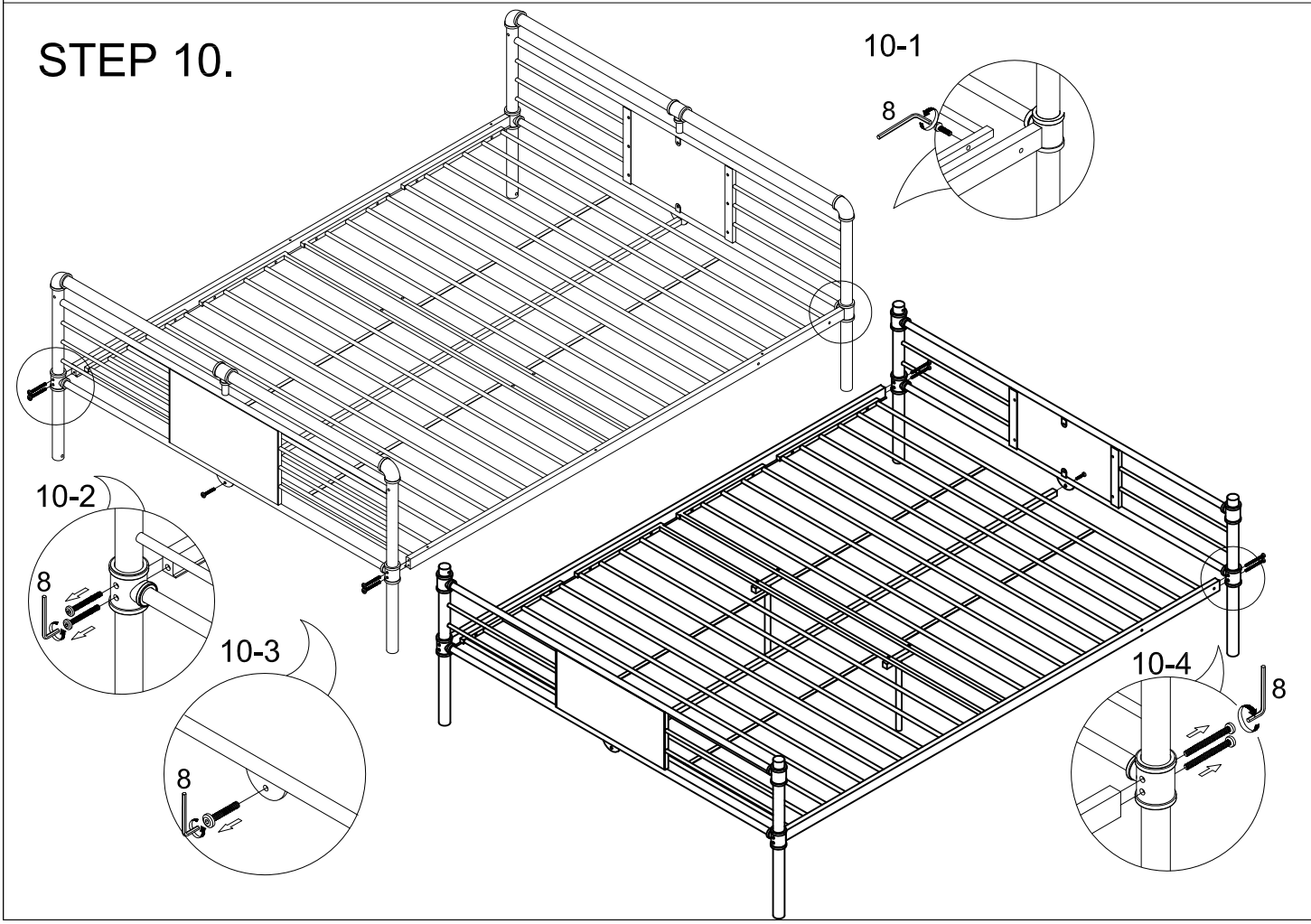

STEP 11.

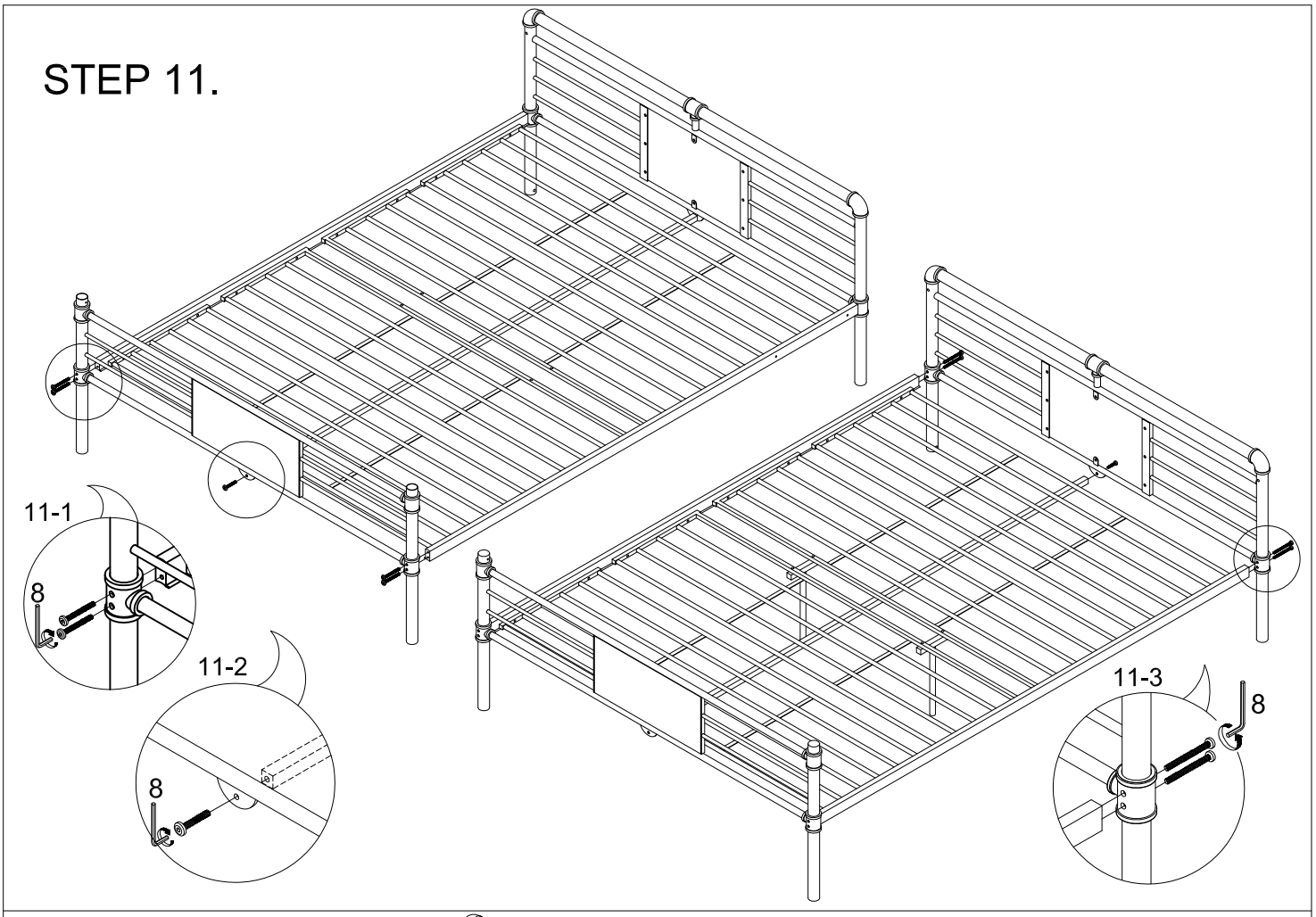

STEP 12.

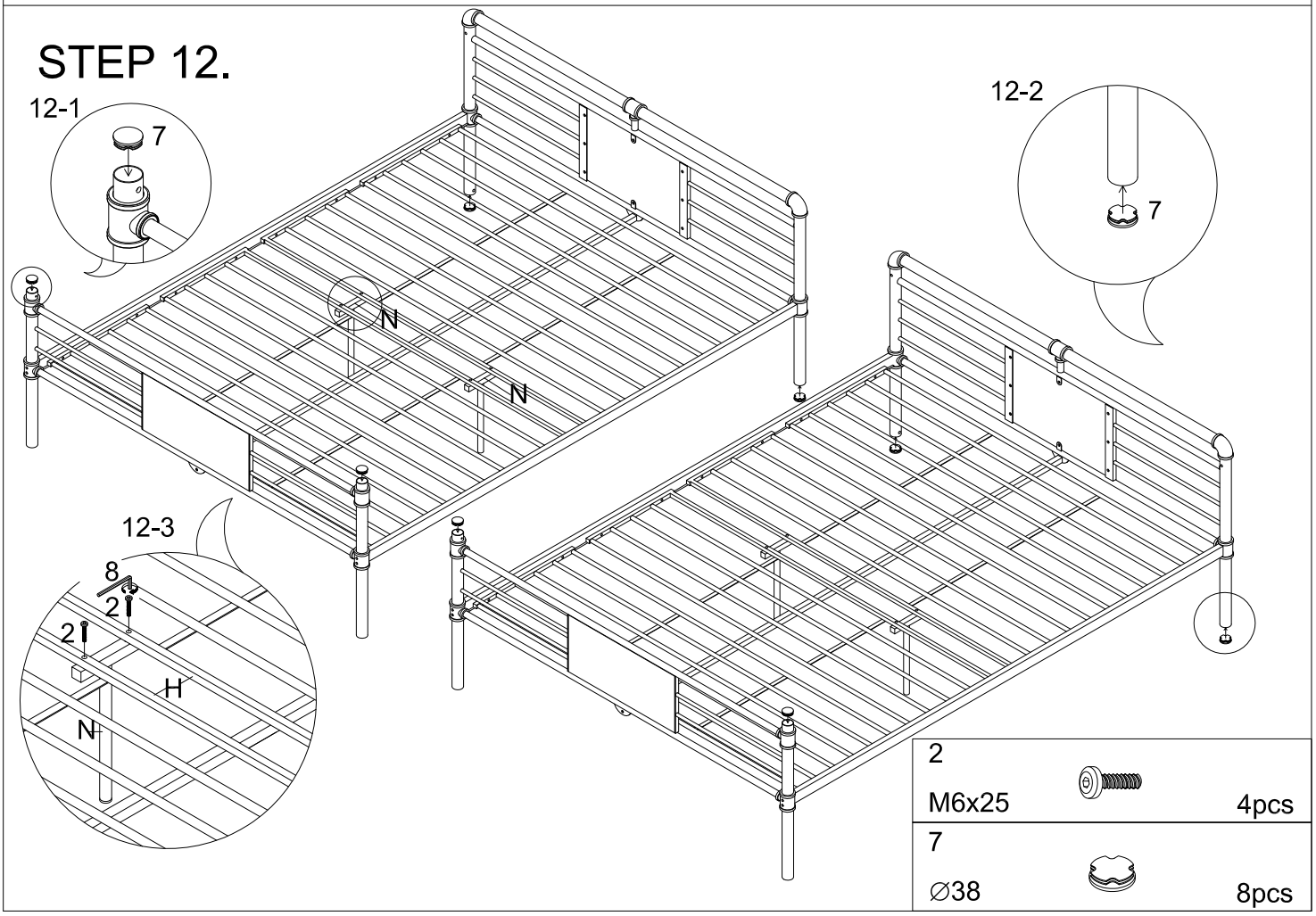

2 M6x25		4pcs
7 ∅38		8pcs

Safety Warnings

1.Follow the information on the warnings appearing on the upper bunk end structure and on the carton . Do not remove warning label from bed.

2.Always use the recommended size mattress or/and mattress support to help prevent the likelihood of entrapment or falls.

3.Surface of mattress must be at least 5 in. below the upper edge of guardrails .

4.Do not allow children less than 6 years of age to use the upper bunk.

5.Periodically check and ensure that the guardrail, ladder ,and other components are in their proper position ,free from damage ,and that all connectors are tight .

6.Prohibit horseplay on/or under the bed and prohibit jumping on the bed.

7.Always use the ladder for entering and leaving the upper bunk.

8.Do not use substitute parts ,Contact manufacturer or dealer for replacement parts.

9.Use of a night light may provide added safety precaution for a child using the upper bunk.

10.Always use guardrails on both long sides of the upper bunk.

11.If the bunk bed will be placed next to a wall, the guardrail that runs the full length of the bed should be placed against the wall to prevent entrapment between the bed and the wall.

12.The use of water or sleep flotation mattress is prohibited .

13.Keep these instructions for future reference.

14.Use only mattress which is 78 3/4"X60"X6" on upper bunk and for bottom bunk required 78 3/4"X60"X8"mattress .

15. Prohibit more than one person on upper bunk.

STRANGULATION HAZARD:

16.Never attach or hang items to any part of the bunk bed that are not designed for use with the bed for example, but not limited to hooks, belts, and jump ropes.