Installation Manual
KS2207

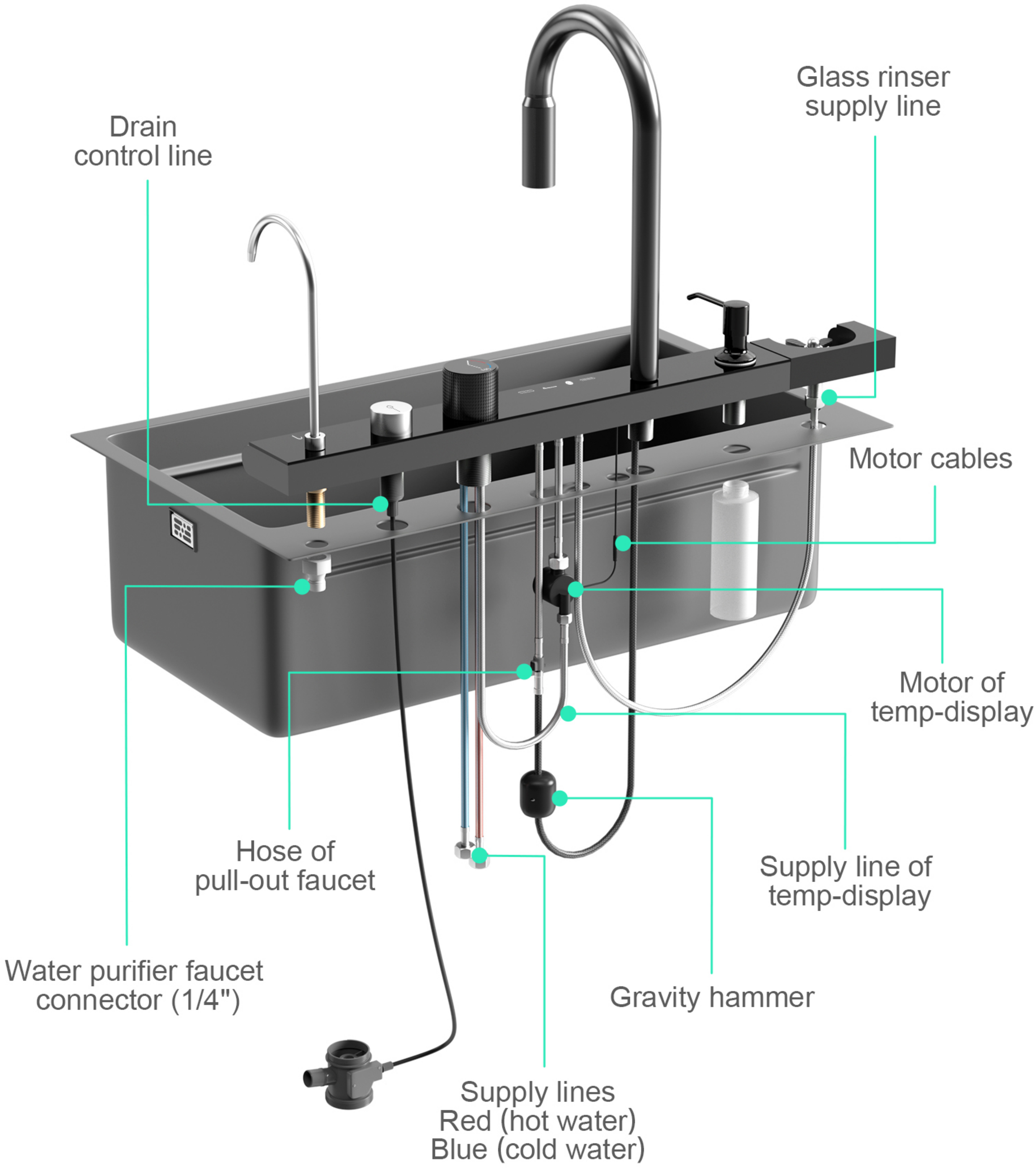

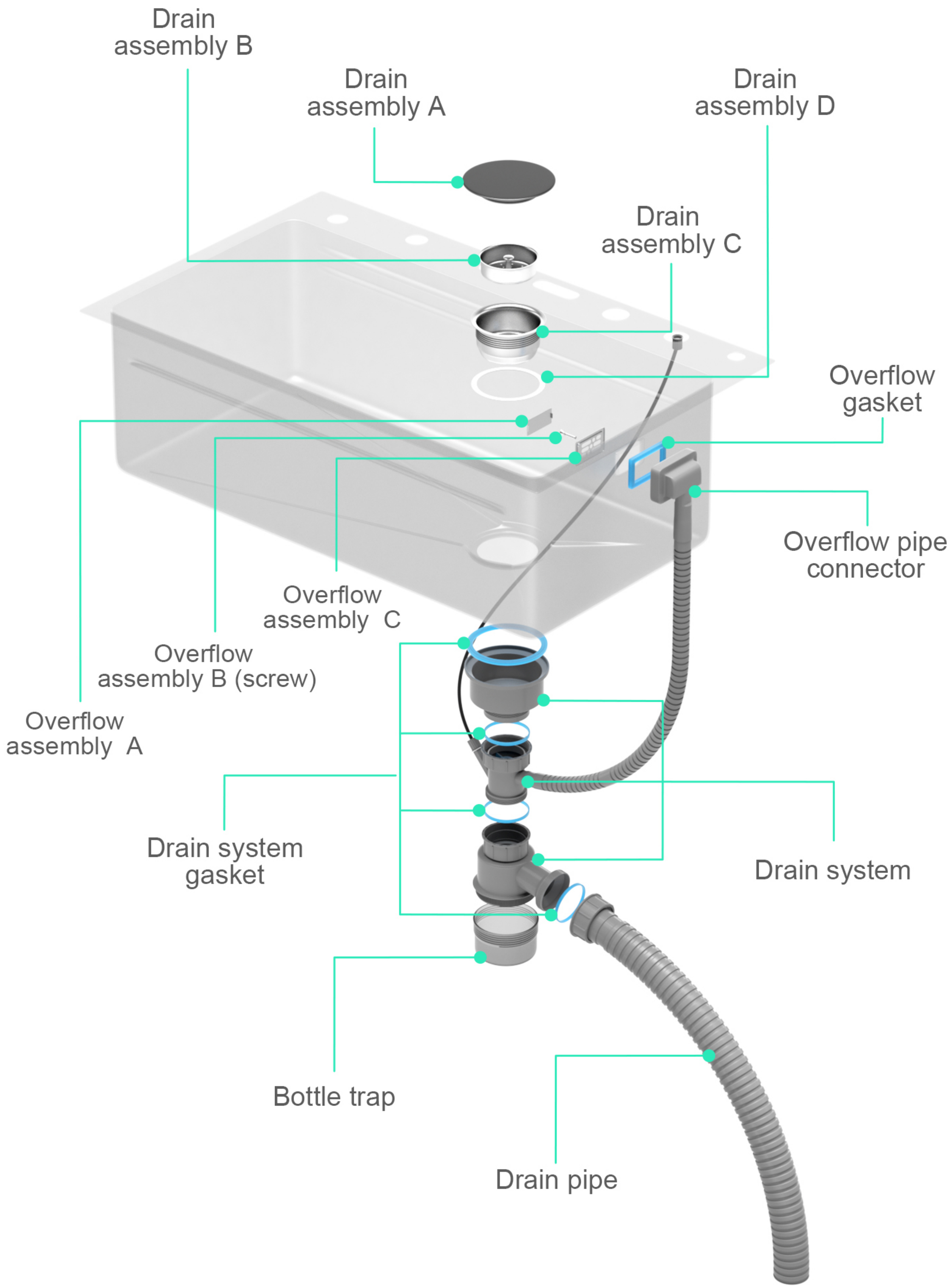
Drain assembly B
Drain assembly A
Drain assembly D
Drain assembly C
Overflow gasket
Overflow pipe connector
Overflow assembly C
Overflow assembly B (screw)
Overflow assembly A
Drain system gasket
Drain system
Bottle trap
Drain pipe