ASSEMBLY INSTRUCTION
SKU CODE: W00548
ITEM NAME: TWIN BED

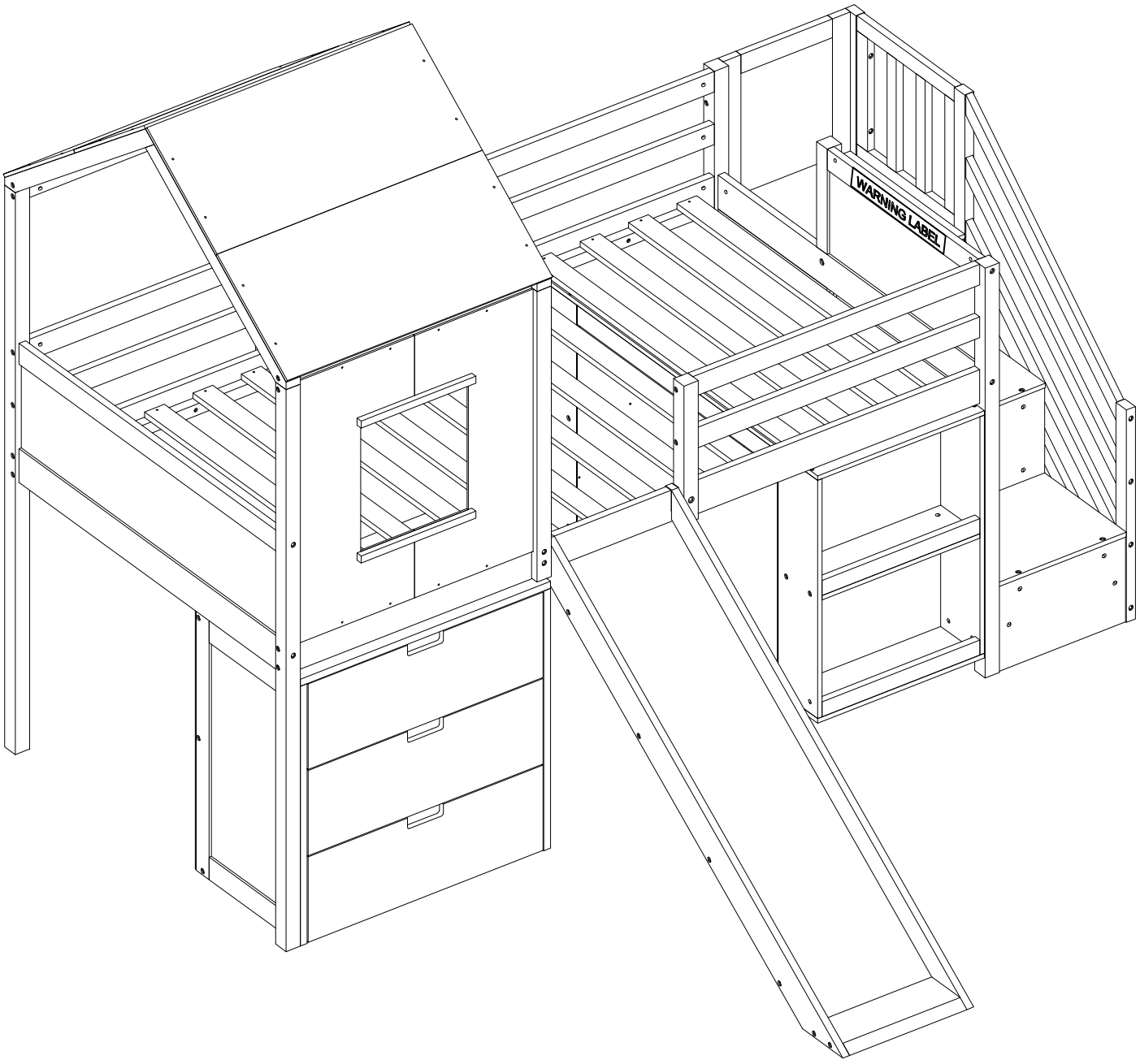



SAFETY WARNING



1. This bed is designed for use only mattress (es) meeting the following specifications on the upper bunk, and lower bunk:

Up bed

Bed type	Length	Width	Thickness
Twin Standard	75"	38"	6" max

2. Replacement parts, including additional guardrails, maybe obtained from any of our (YEUK FUNG GQ INTERNATIONAL LIMITED.ROOM 1602, 16TH FLOOR, MULTIFIELD COMMERCIAL CENTRE,, 426 SHANGHAI STREET, MONGKOK, KLN, HONG KONG). dealers
3. Follow the information on the warnings appearing on the upper bunk bed end structure and on the carton. Do not remove warning label from bed.
4. Always use the recommended size mattresses or mattress supports, or both, to help prevent the likelihood of entrapment or falls.
5. Surface of mattress must be at least 5" (127mm) below the upper edge of guardrails.
6. Do not allow children under 6 years of age to use the upper bunk.
7. Periodically check and ensure that the guardrail, ladder, and other components are in their proper position, free from damage, and that all connectors are tight.
8. Do not allow horseplay on or under the bed and prohibit jumping on the bed.
9. Always use the ladder for entering and leaving the upper bunk.
10. Do not use substitute part. Contact the manufacture or dealer for replacement part.
11. Use of a night light may provide added safety precaution for a child using the upper bunk.
12. Always use guardrails on both long sides of the upper bunk. If the bunk bed will be placed next to the wall, the guardrail that runs the full length of the bed should be placed against the wall to prevent entrapment between the bed and wall.
13. The use of water or sleep flotation mattresses is prohibited.
14. STRANGULATION HAZARD - Never attach or hang items to any part of the bunk bed that are not designed for use with the bed; for example, but not limited to, hook, belts and jump ropes.
15. Keep these instruction for future reference.
16. Prohibit more than one person on upper bunk
17. We recommend assembling your bunk bed on the shipping carton to protect your floor or carpet.
18. Be certain all staples are out of the box before beginning assembly on the shipping carton.

ASSEMBLY INSTRUCTION

SKU CODE: W00548

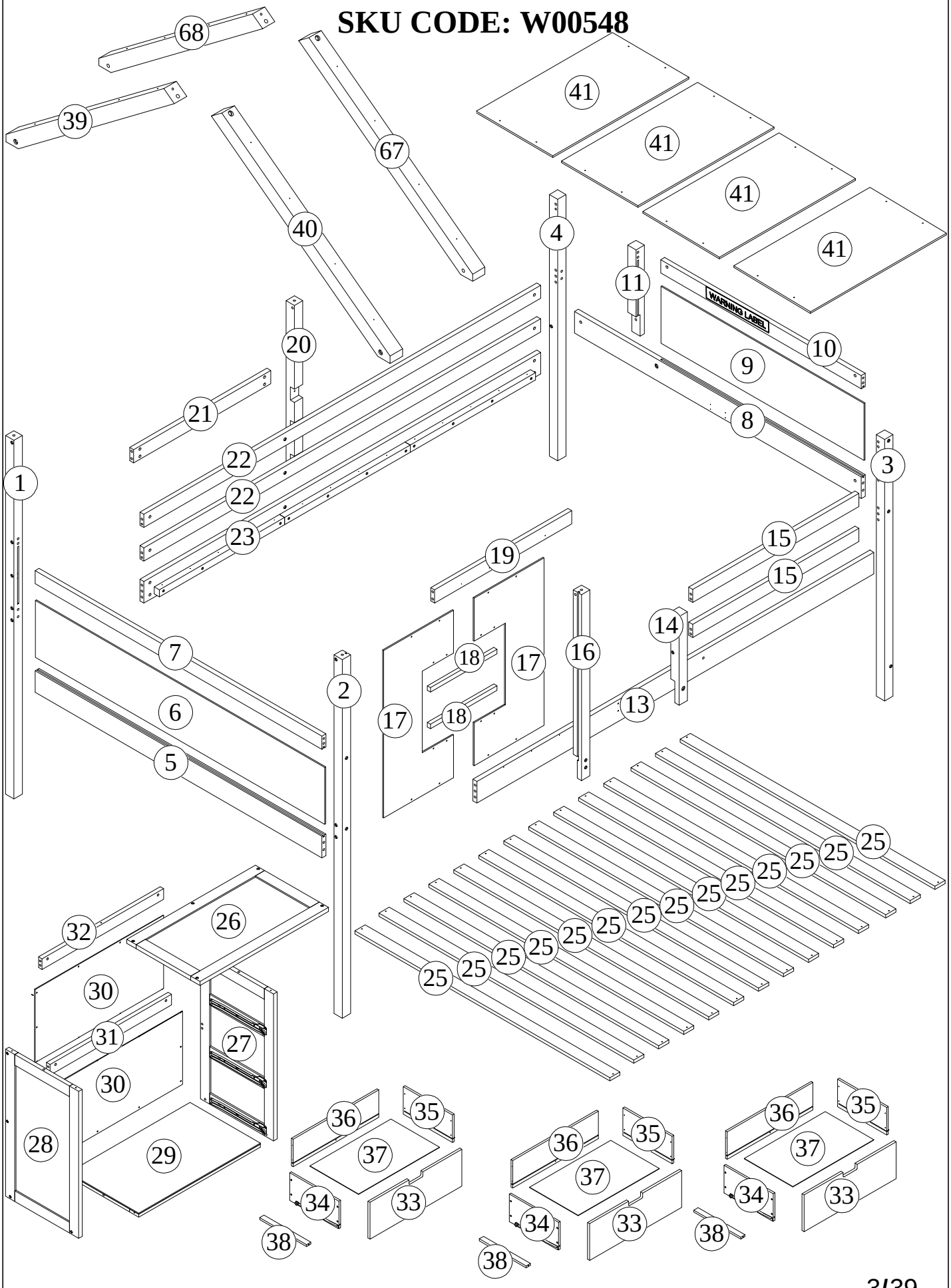

ASSEMBLY INSTRUCTION

SKU CODE: W00548

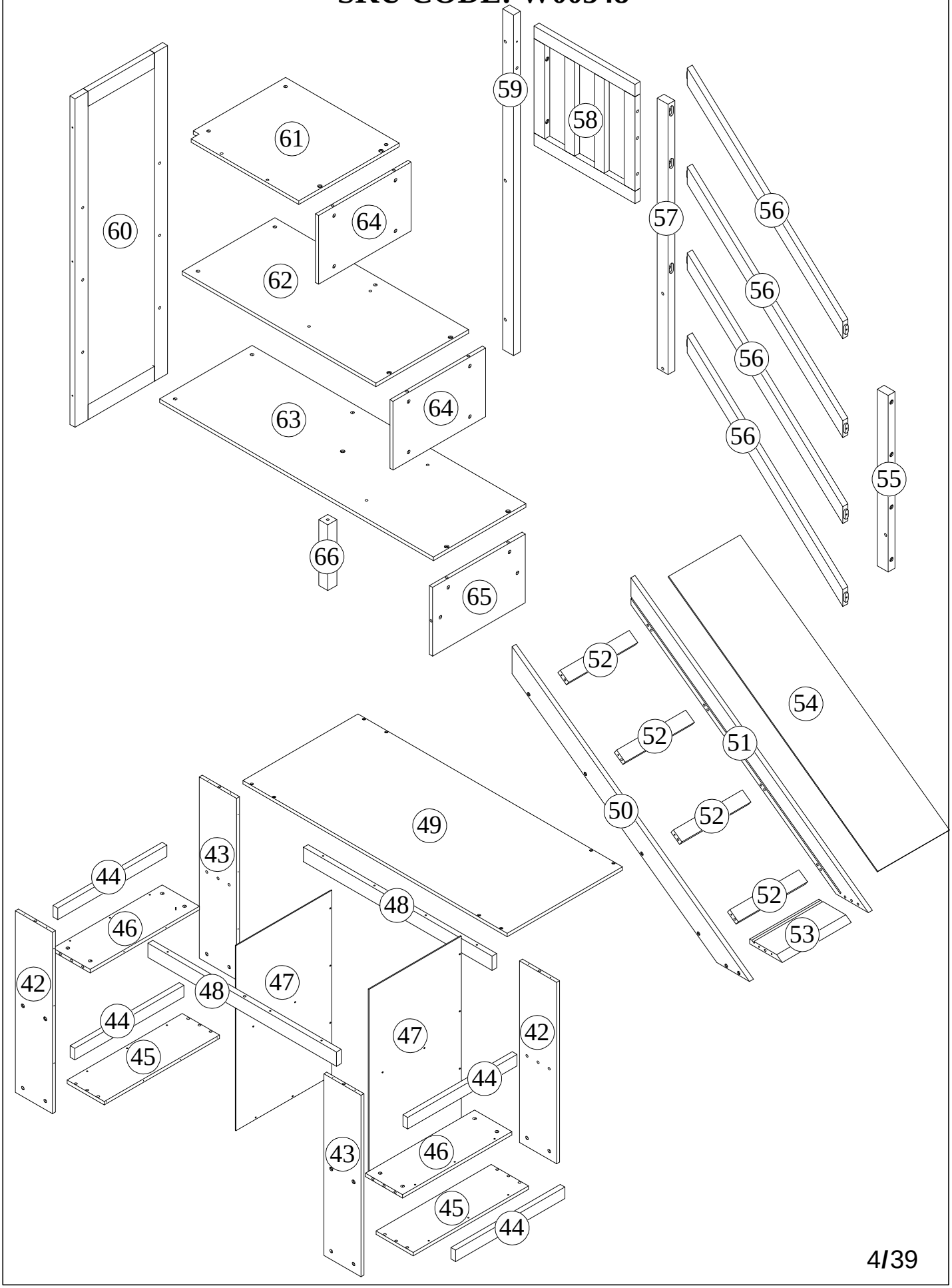

Part List (Box 1-W00548 - 1)

1  Rear left leg - 1 pc	2  Front left bed leg - 1 pc	3 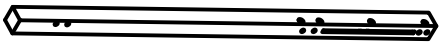 Front right leg - 1 pc
4 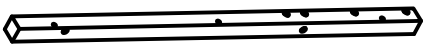 Rear right leg - 1 pc	5 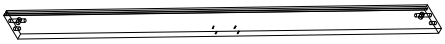 Bed side rail - 1 pc	6  Left frame panel - 1 pc
7  Upper left bar - 1 pc	8 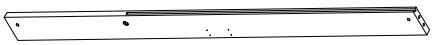 Bed side rail - 1 pc	9 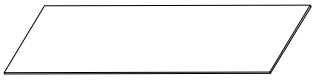 Right frame panel - 1 pc
10  Upper right bar - 1 pc	11 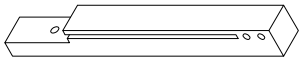 Upper right bar - 1 pc	13 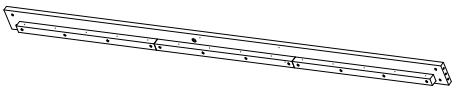 Bed side rail - 1 pc
14 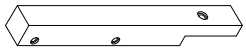 Front upper bar - 1 pc	15  Front right bar- 2 pcs	16  Front middle bar - 1 pc
17 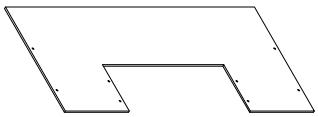 Front frame panel - 2 pcs	18 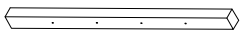 Front bar of the panel- 2 pcs	19 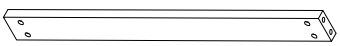 Front top bar - 1 pc
20 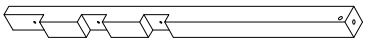 Rear middle bar - 1 pc	21  Rear top bar - 1 pc	22  Rear horizontal bar - 2 pcs

Part List (Box 2-W00548 - 2)

23  Bed side rail - 1 pc	25 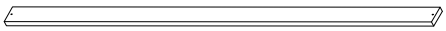 Slats - 14 pcs	26 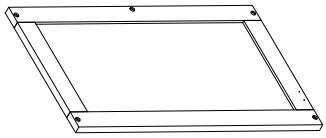 Cabinet top frame - 1 pc
27 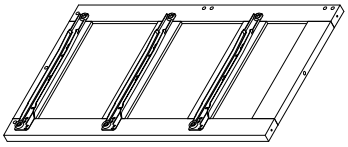 Right cabinet frame- 1 pc	28 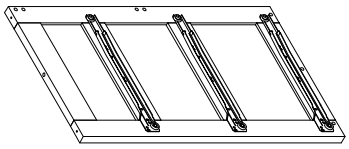 Left cabinet frame- 1 pc	29 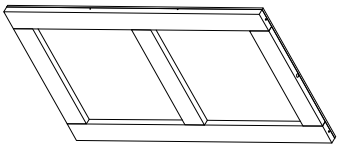 Cabinet bottom frame- 1 pc
30 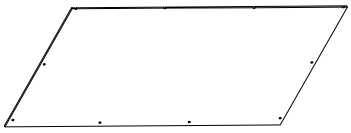 Cabinet back panel- 1 pc	31 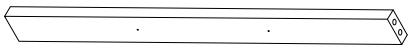 Rear bar- 1 pc	32 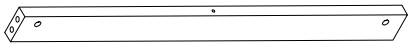 Upper rear bar- 1 pc
33 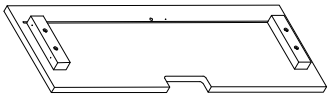 Drawer front panel- 3 pcs	34 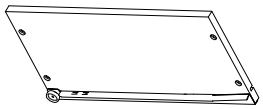 Drawer side panel- 3 pcs	35 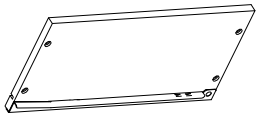 Drawer side panel- 3 pcs
36 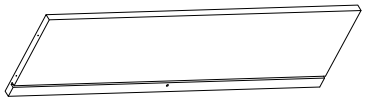 Drawer back panel- 3 pcs	37  Drawer bottom panel- 3 pcs	38 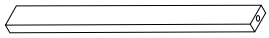 Bottom support bar- 3 pcs
39 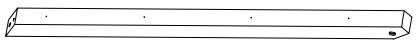 Top diagonal rail - 1 pc	40 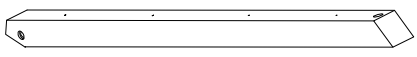 Top diagonal rail - 1 pc	41 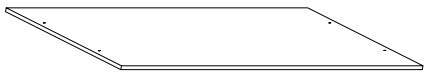 Top panel- 4 pcs
42 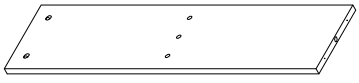 Side panel- 2 pcs	43 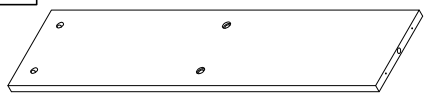 Side panel- 2 pcs	44  Front bar- 4 pcs

Part List (Box 3-W00548 - 3)

45 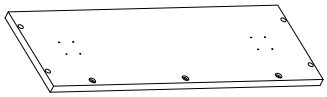 Cabinet bottom panel- 2 pcs	46 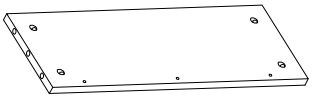 Middle panel- 2 pcs	47 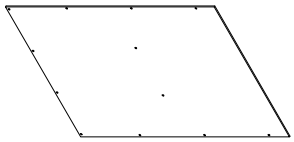 Cabinet back panel- 2 pcs
48  Bottom support bar under the panel - 2 pcs	49 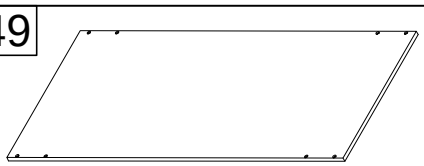 Top panel- 1 pc	50  Left slide rail - 1 pc
51 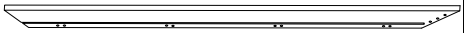 Right slide rail - 1 pc	52  Slide support rail - 4 pcs	53  Slide stair panel - 1 pc
54  Slide stair panel - 1 pc	55 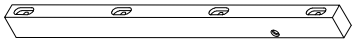 Vertical stair bar - 1 pc	56  Diagonal stair bar - 4 pcs
57 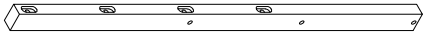 Middle vertical bar - 1 pc	58 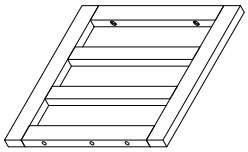 Upper left frame - 1 pc	59 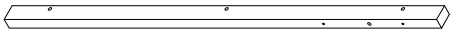 Rear vertical bar- 1 pc

Part List (Box 3-W00548 - 3)

60 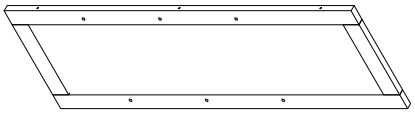 Rear frame- 1 pc	61 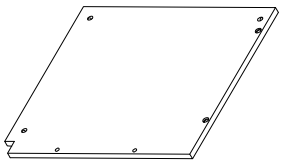 Step panel - 1 pc	62 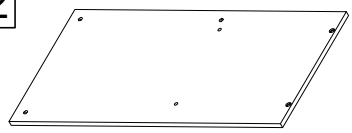 Step panel - 1 pc
63 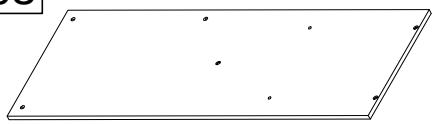 Step panel - 1 pc	64 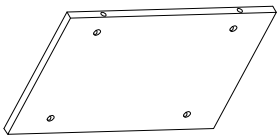 Front panel - 2 pcs	65 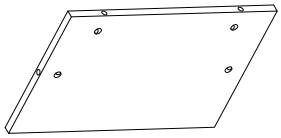 Front panel - 1 pc
66 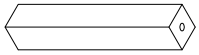 Support leg - 1 pc	67 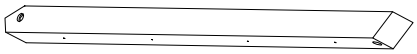 Top diagonal rail - 1 pc	68 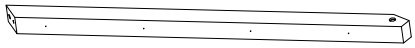 Top diagonal rail - 1 pc

Hardware List (Box 1 -W00548 - 1)

A 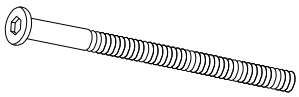 Ø1/4" x 80 mm Hex-Head bolts 33 pcs	B  Ø1/4" x 12 mm Horizontal-Hole bolts 73 pcs	C 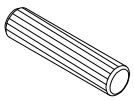 Ø8 x 30 mm Wood dowel 58 pcs
EE 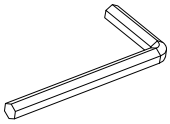 Allen Key 2pcs	E 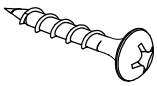 M4 x 15 mm Wood Screws16 pcs	F  Ø1/4" x 30 mm Hex-Head bolts 3 pcs
G  Ø1/4" x 16 mm T-nut-2pcs	H 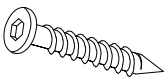 1/4" x30 Screws 5 pcs	I 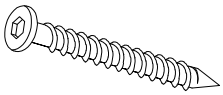 1/4" x55 Screws 17 pcs
K 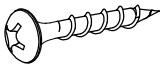 M4 x 20 mm Wood Screws 16 pcs	N 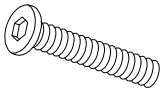 Ø1/4" x 50 mm Hex-Head bolts 26 pcs	O 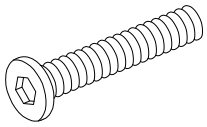 Ø1/4" x 60 mm Hex-Head bolts 14 pcs
P 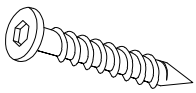 1/4" x40 Screws 3 pcs	Q 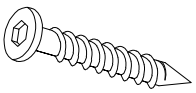 1/4" x35 Screws 21 pcs	R 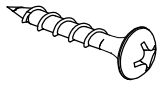 M3 x 12 mm Wood Screws 46 pcs
S 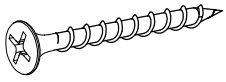 M4 x 25 mm Wood Screws 47 pcs	T  Ø6 x 30 mm Wood dowel 3 pcs	Y 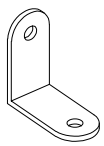 Angle Metal-3pcs
Z 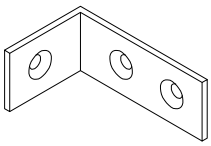 Angle Metal - 1pc	M 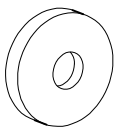 Washer -4pcs	X 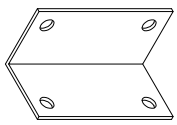 Angle Metal - 2pcs

Hardware List (Box 1 -W00548 - 1)

AB  M4 x 15 mm Wood Screws - 9 pcs	AC 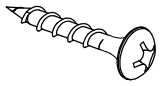 M3.5 x 12 mm Wood Screws 24 pcs	AA 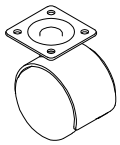 Wheel 2pcs
BB 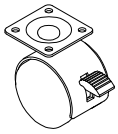 Wheel 2pcs	CC 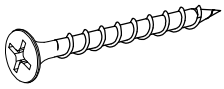 M4 x 30 mm Wood Screws 8 pcs	AE 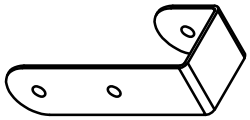 U bracket- 2 pcs
L 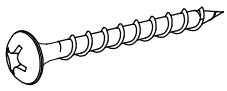 M4 x 35 mm Wood Screws 28 pcs		

ASSEMBLY TOOLS REQUIRED (NOT INCLUDED)

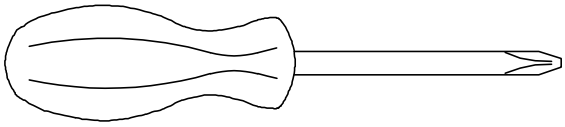

STEP- 1 :

A	B	C
80		
4pcs	4pcs	4pcs

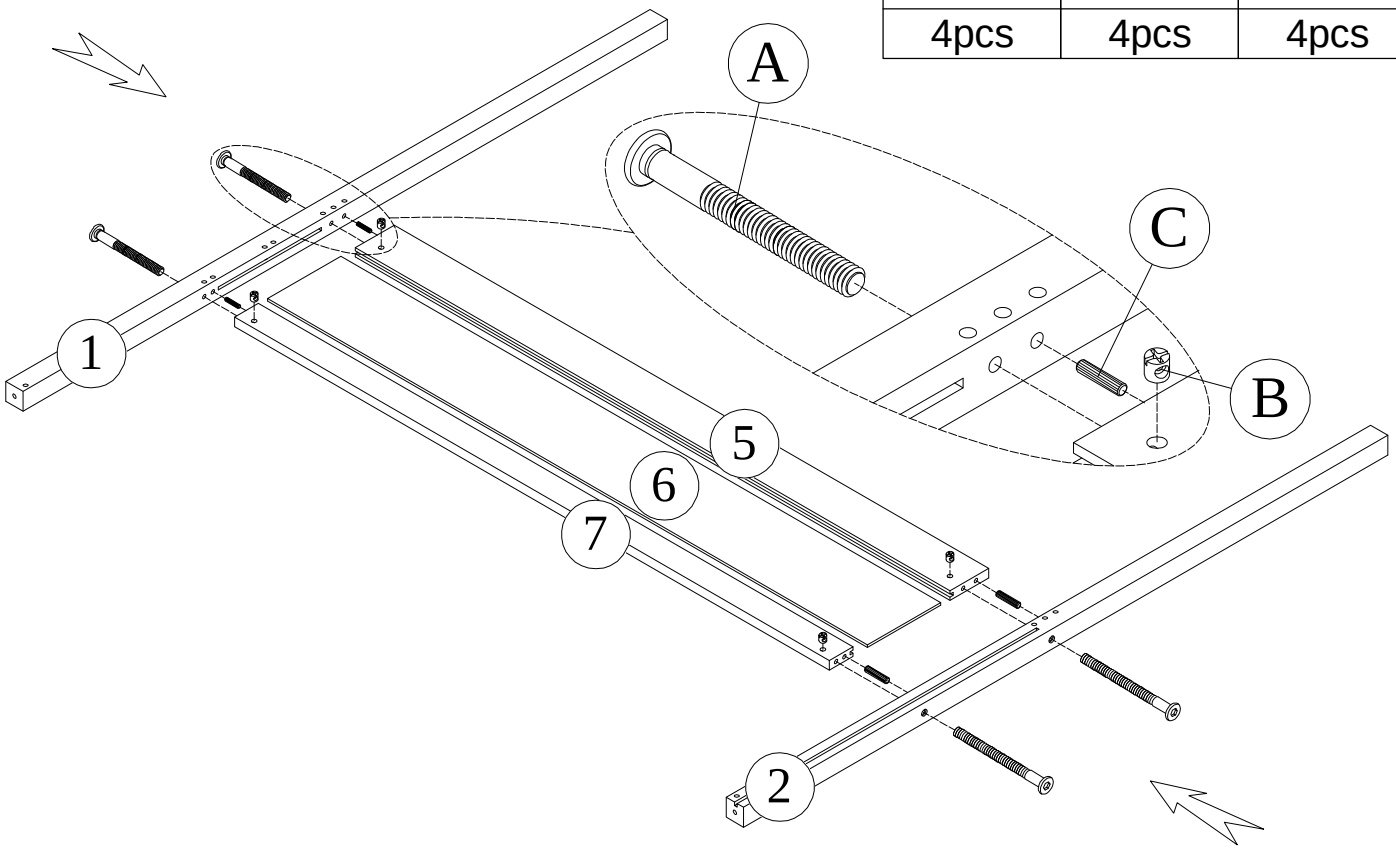

STEP- 2 :

A	B	C	F	G
80			30	
1pc	1pc	1pc	1pc	1pc

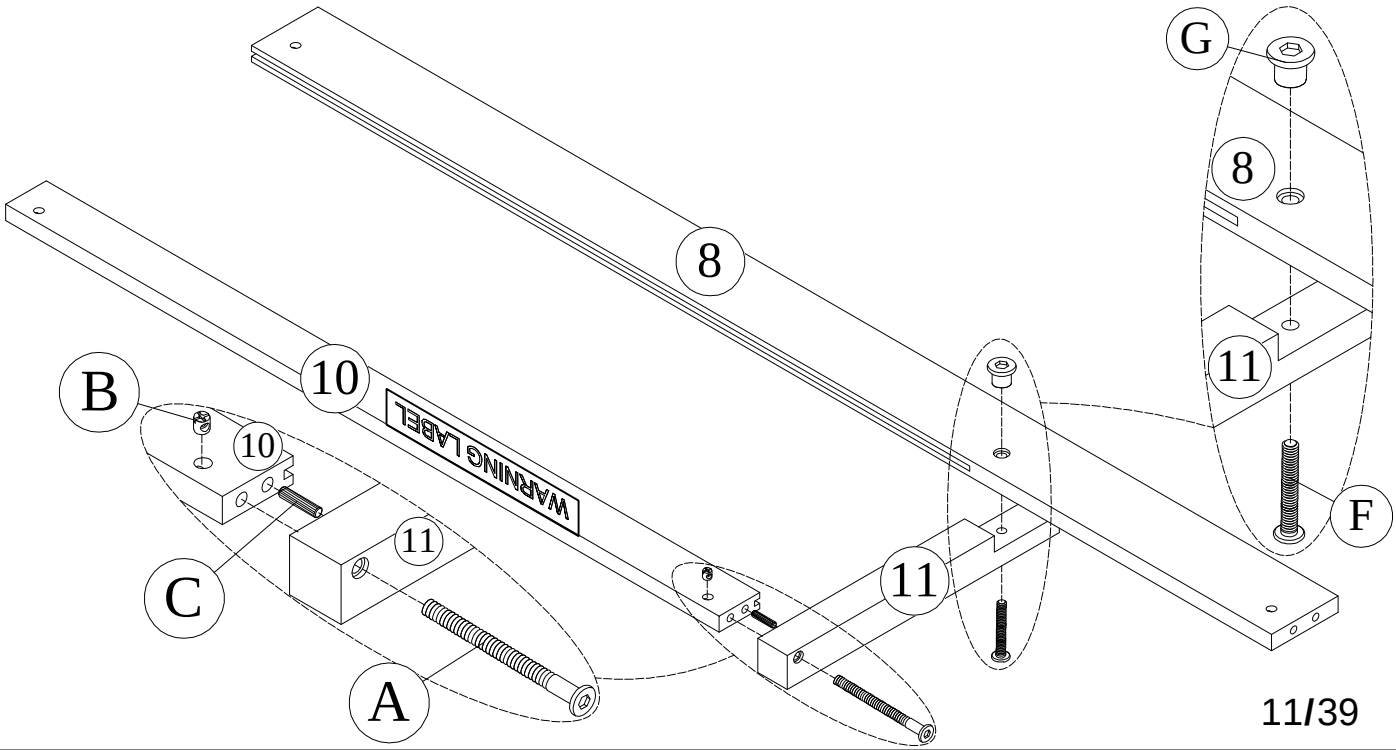

STEP- 3 :

A	B	C
 80		
3pcs	3pcs	3pcs

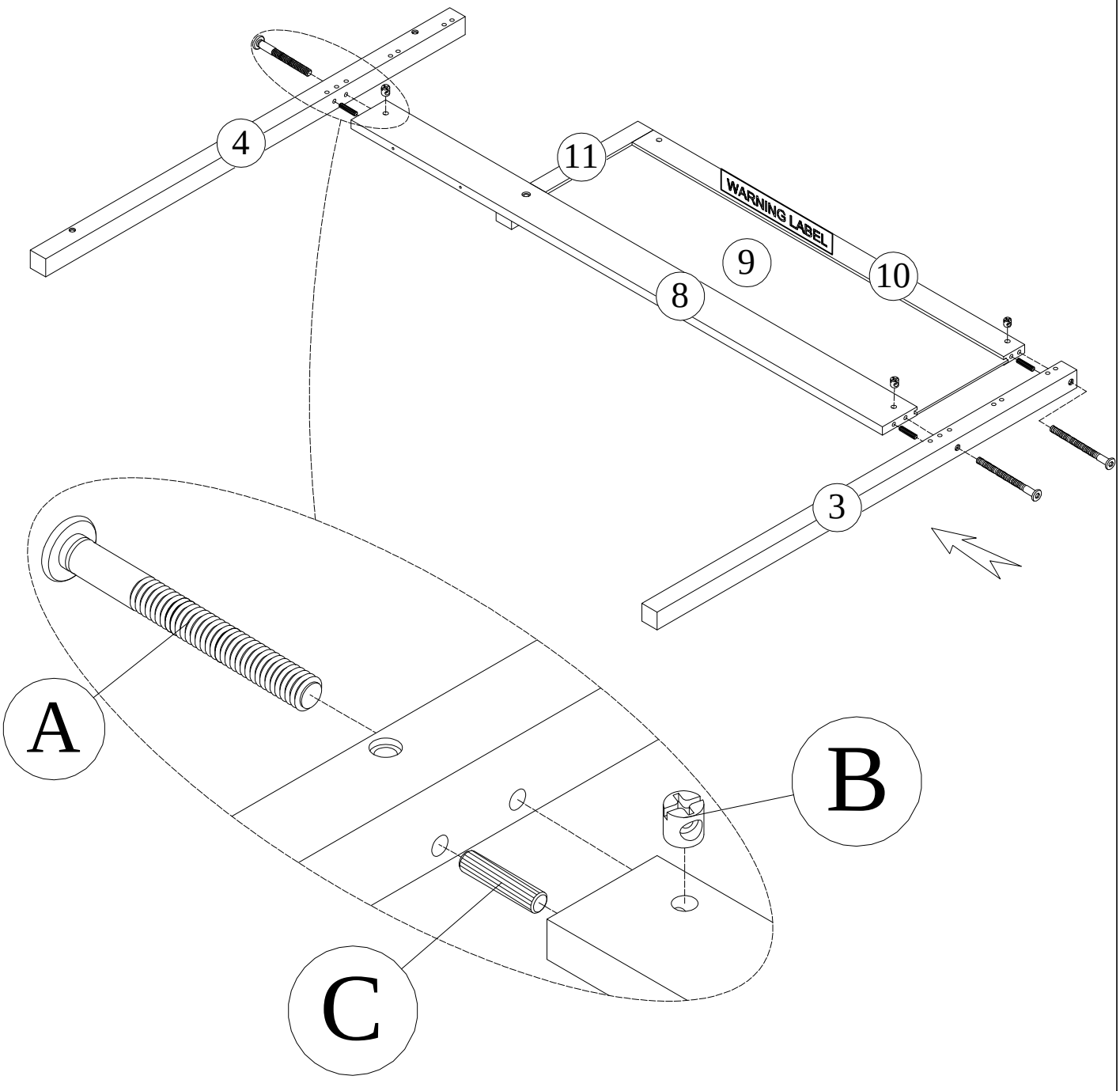

STEP- 4 :

A	B	C
 80		
12pcs	12pcs	8pcs

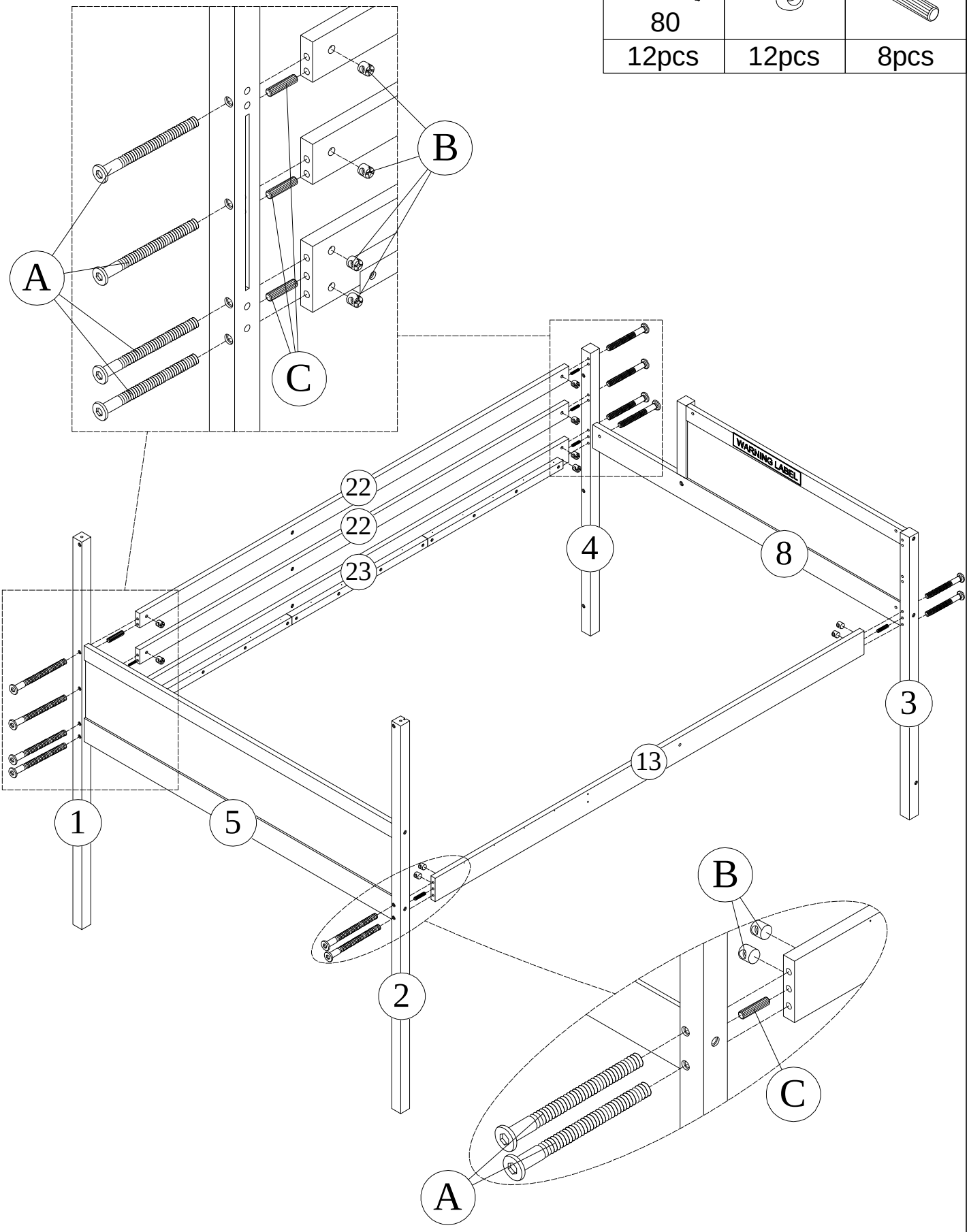

STEP- 5 :

A	B	C
80		
4pcs	4pcs	4pcs

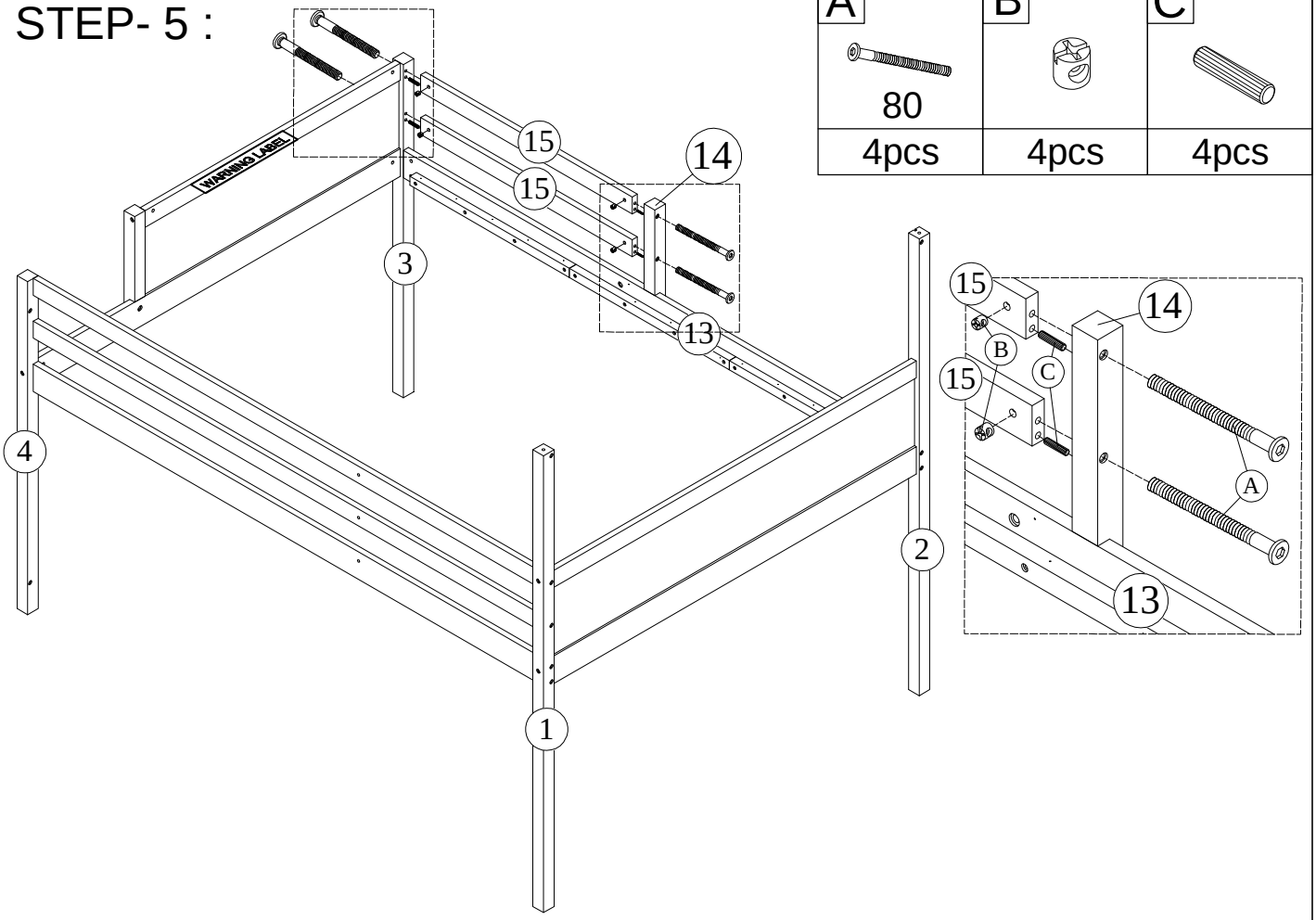

STEP- 6 :

F	G
30	
1pc	1pc

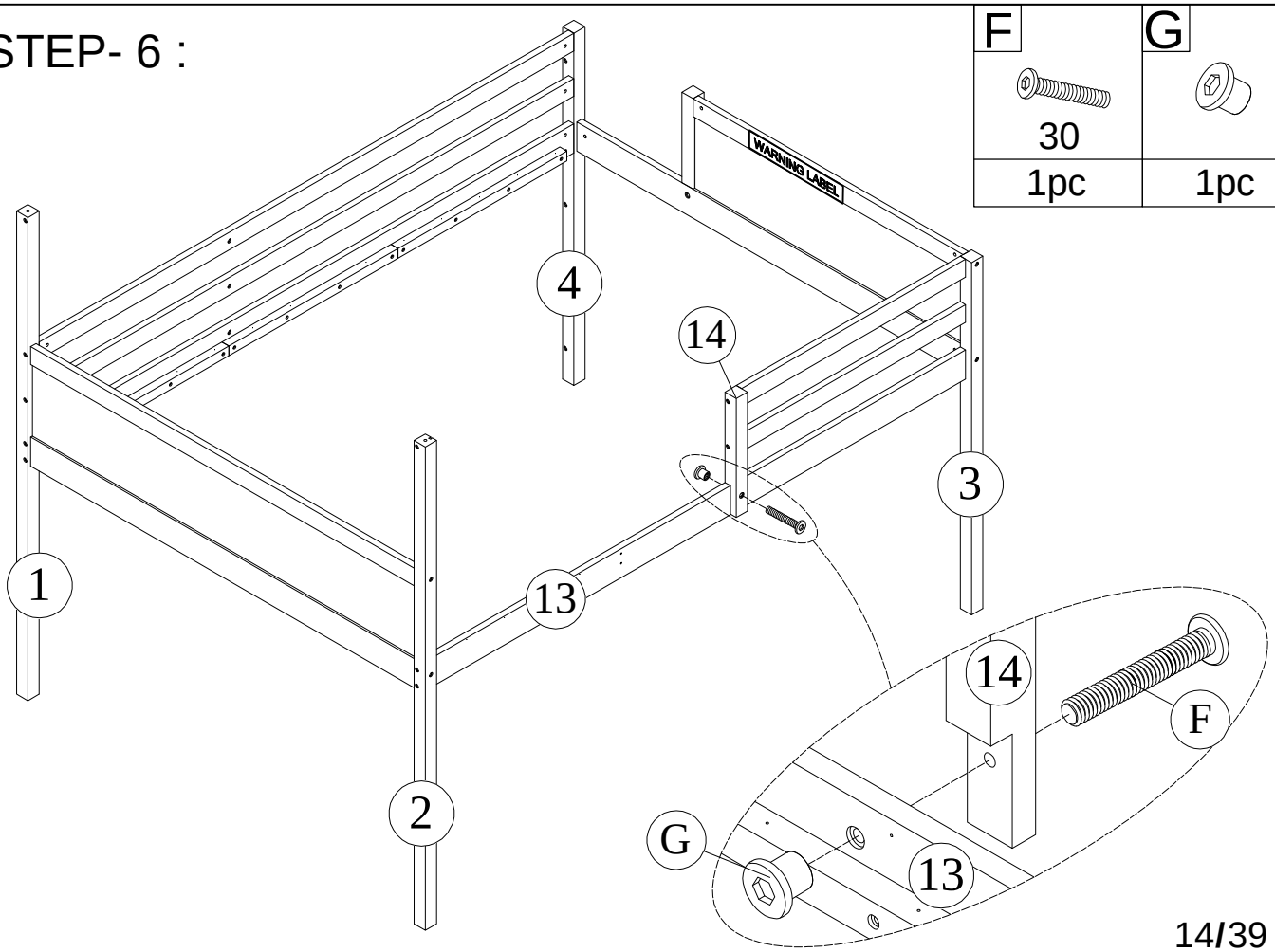

STEP- 7 :

H
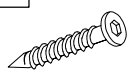
30
5pcs

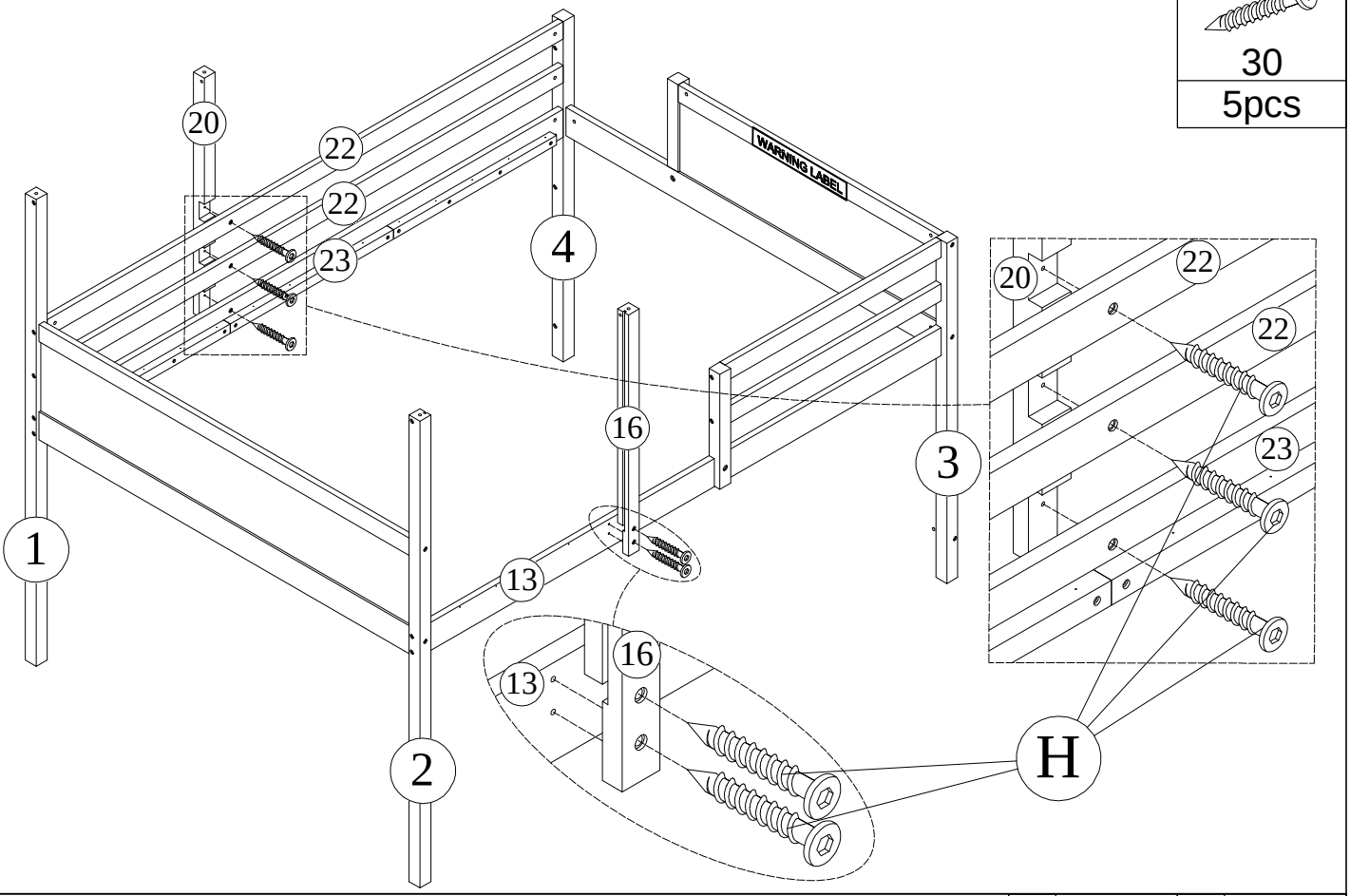

STEP- 8 :

A	B
	
80	
4pcs	4pcs

STEP- 9 :

E



D4X15

8pcs

STEP- 10 :

E



D4X15

8pcs

STEP- 11 :

C	I
	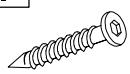 55
2pcs	2pcs

STEP- 12 :

C

4pcs

STEP- 13 :

A	B
 80	
4pcs	4pcs

STEP- 14 :

K
 D4X20
16pcs

STEP- 15 :

B	F	N
2pcs	30 1pc	50 2pcs

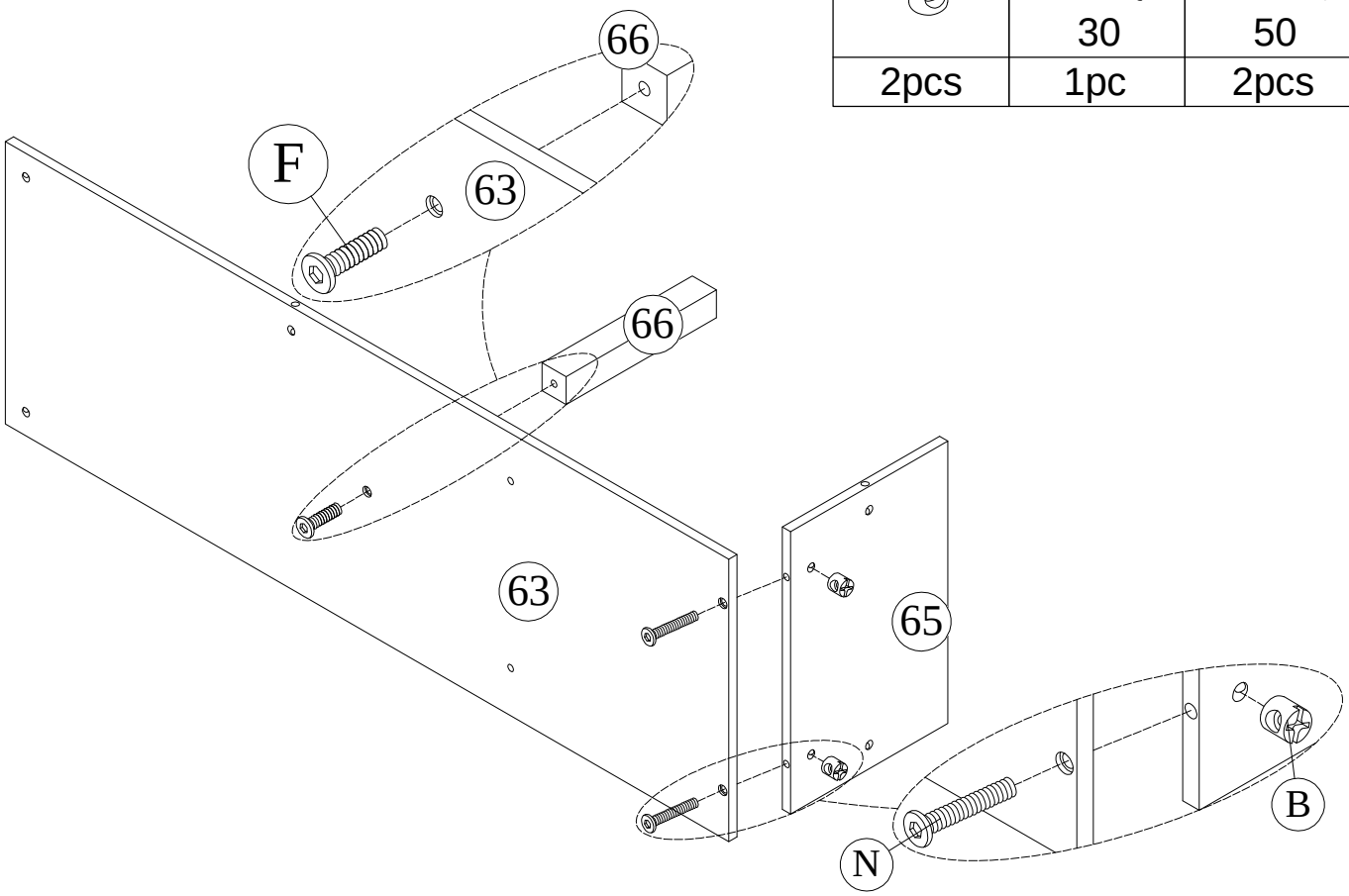

STEP- 16 :

B	N
2pcs	50 2pcs

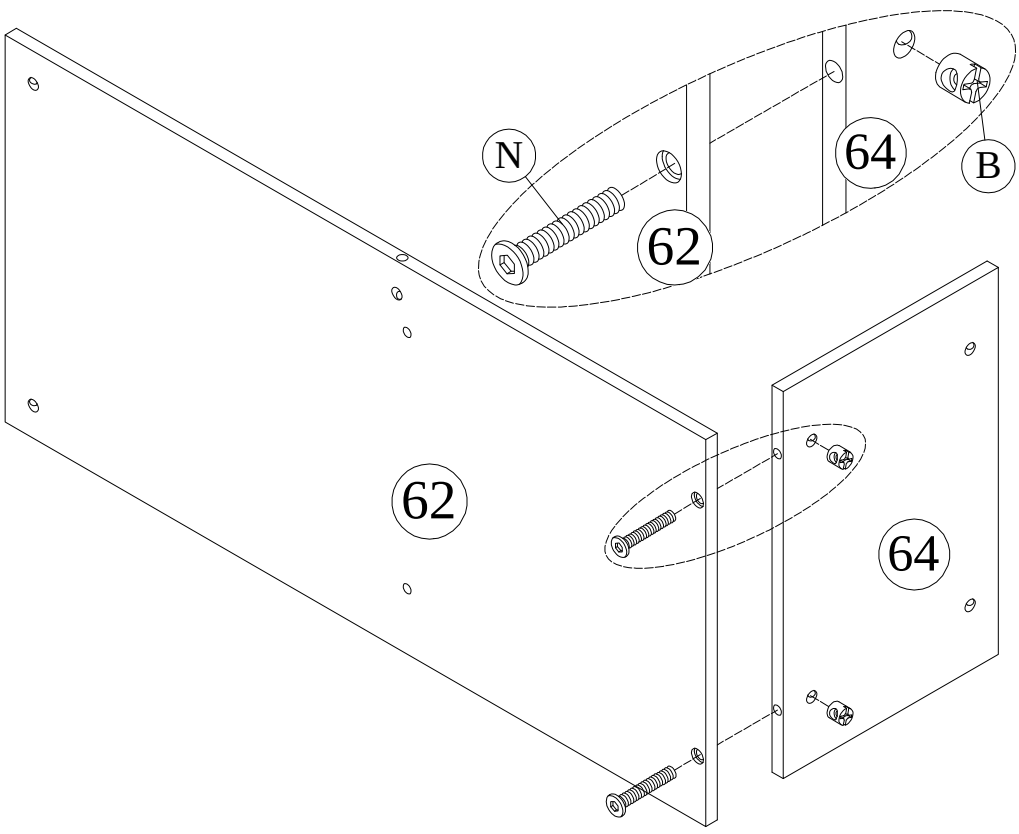

STEP- 17 :

B	N
	 50
2pcs	2pcs

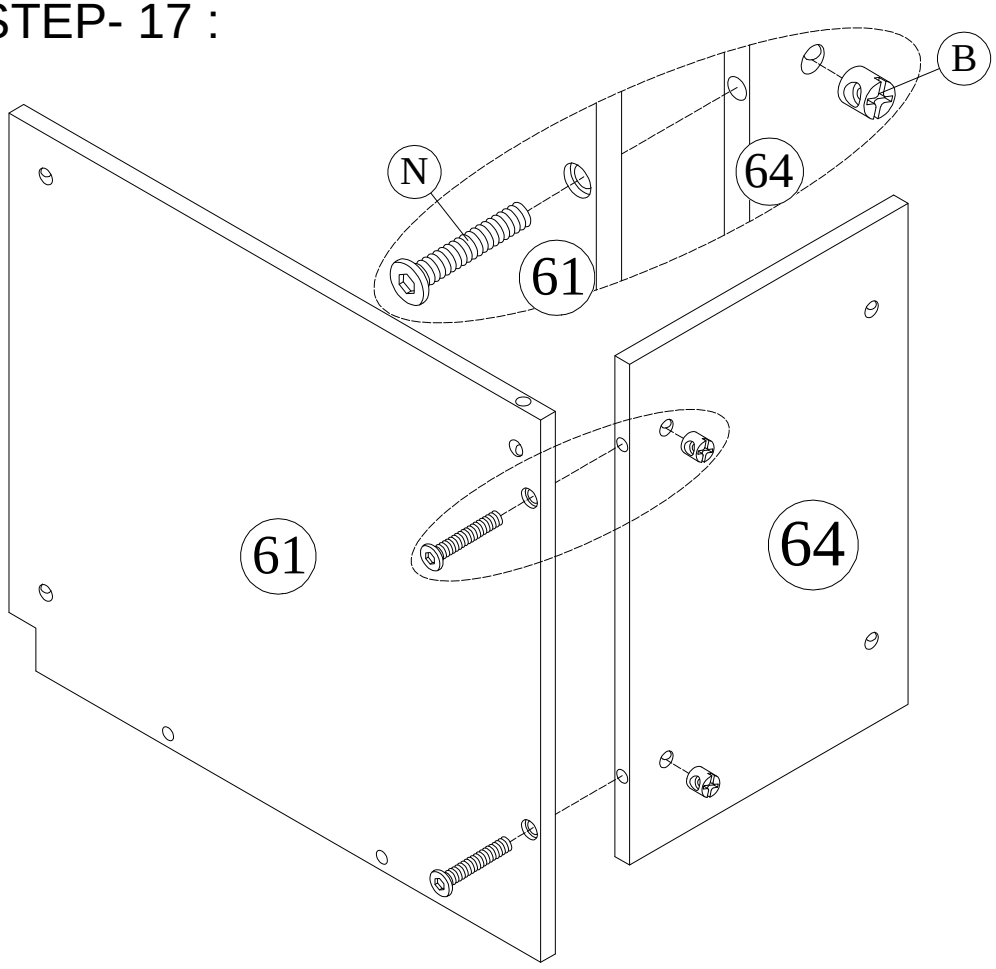

STEP- 18 :

B	N
	 50
2pcs	2pcs

STEP- 19 :

B	N
	 50
2pcs	2pcs

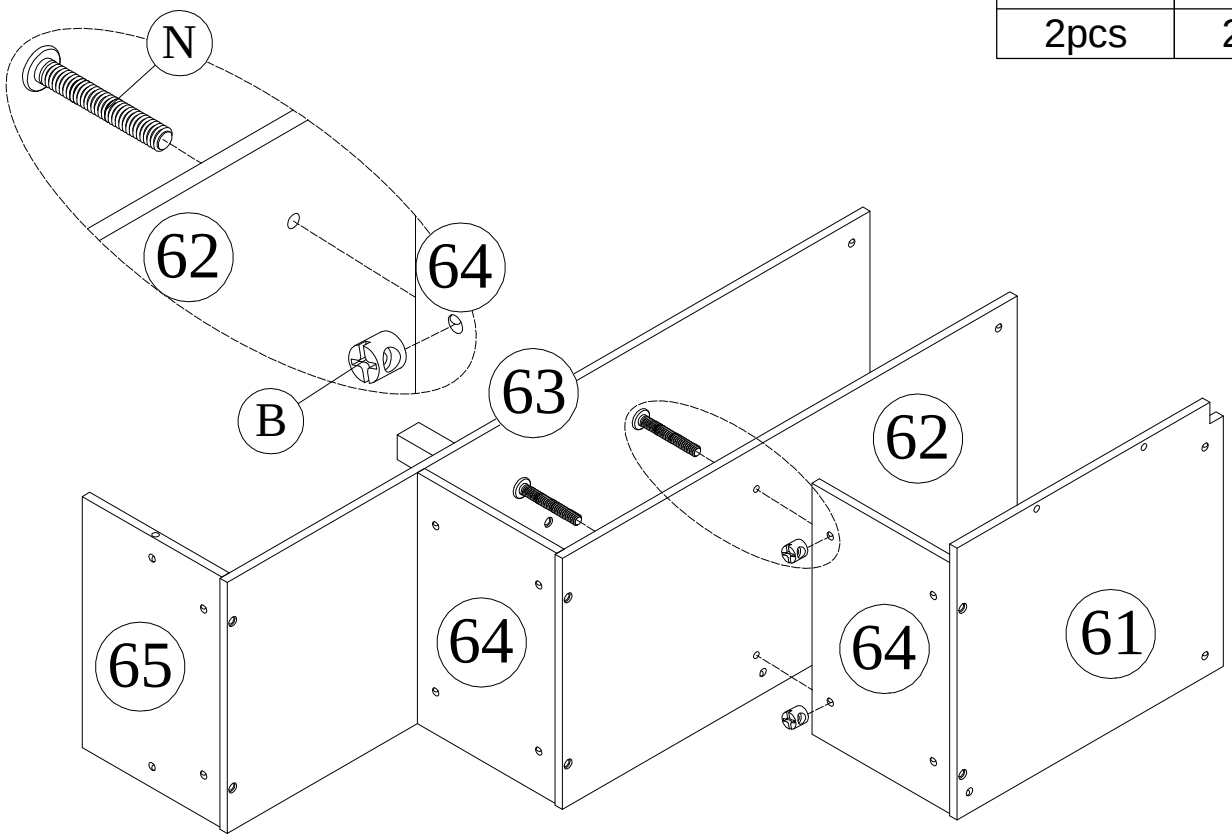

STEP- 20 :

I
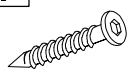 55
8pcs

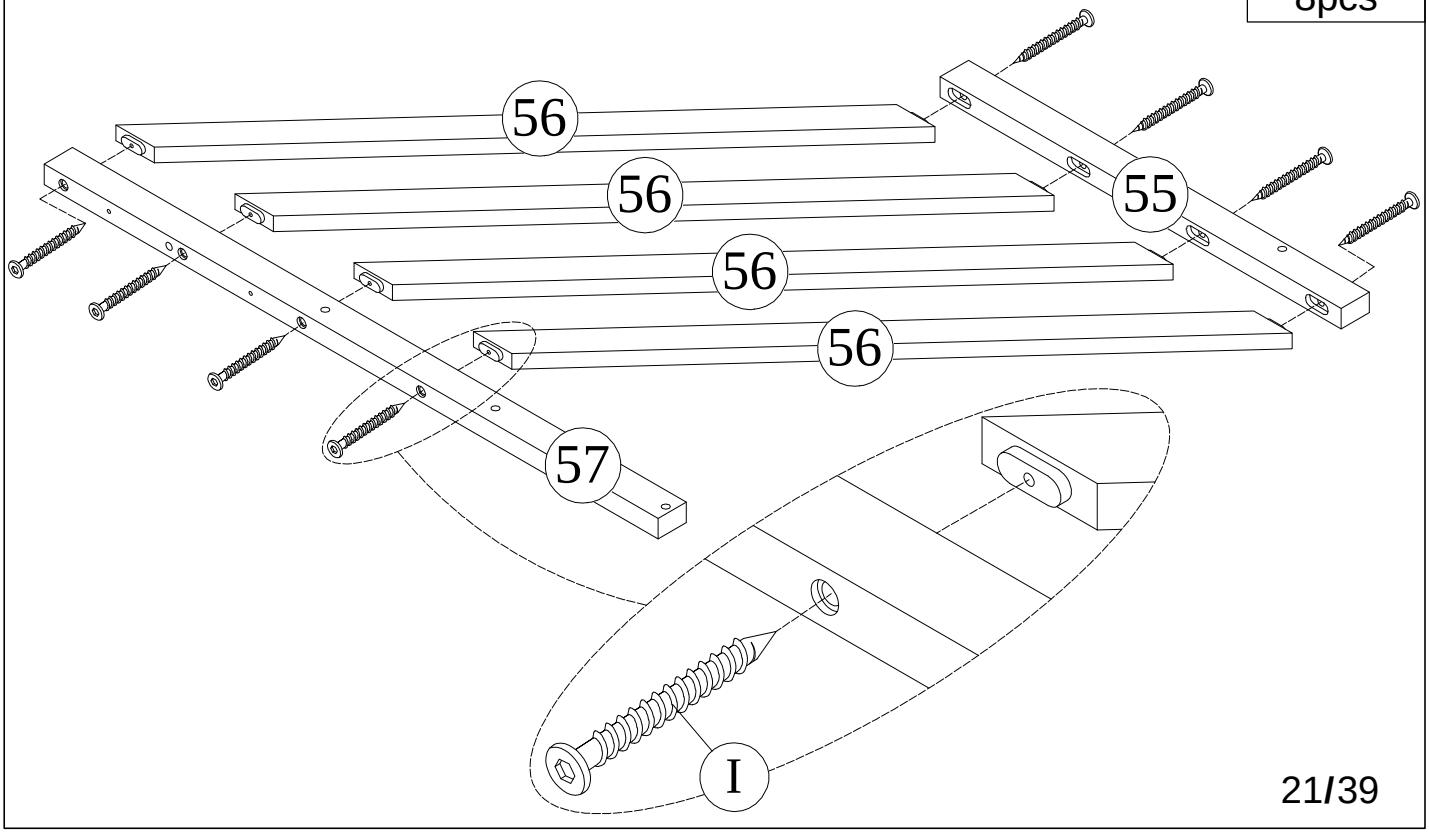

STEP- 21:

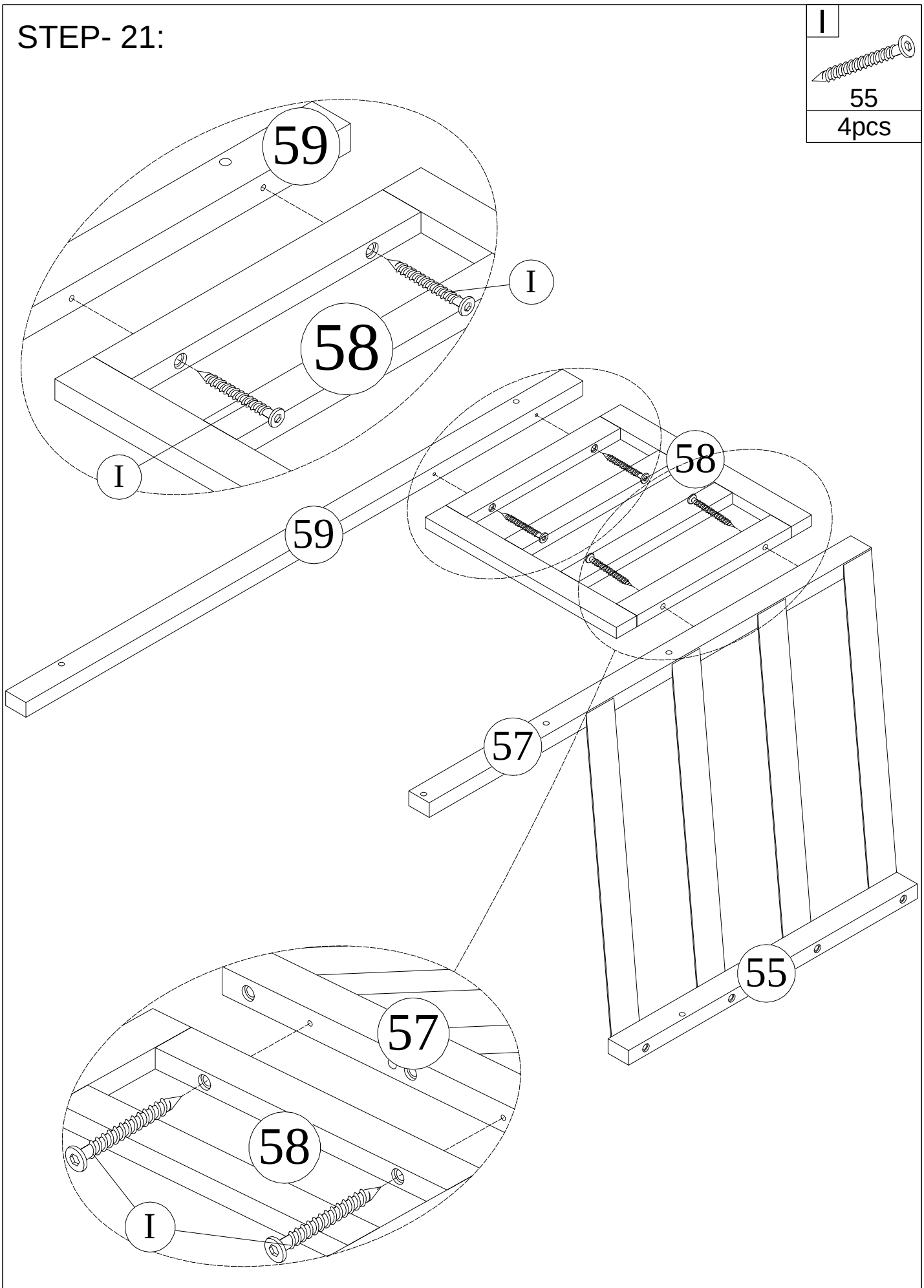

STEP- 22:

B	O
	 60
6pcs	6pcs

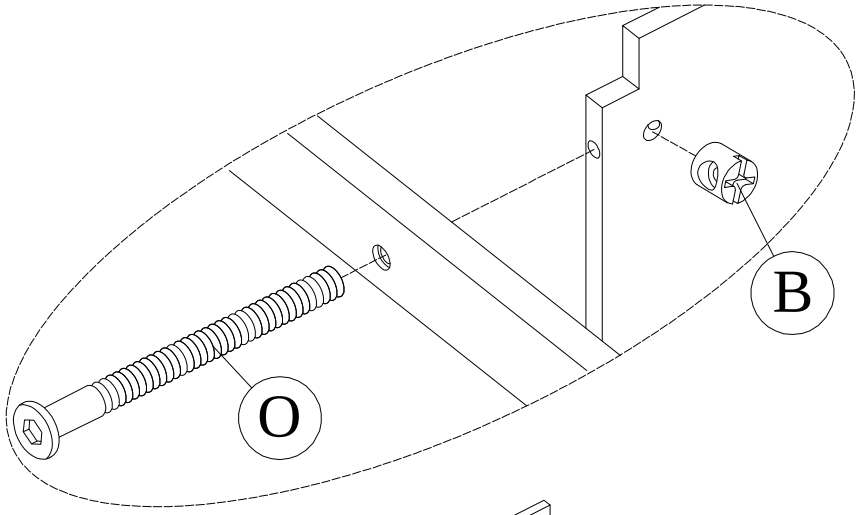

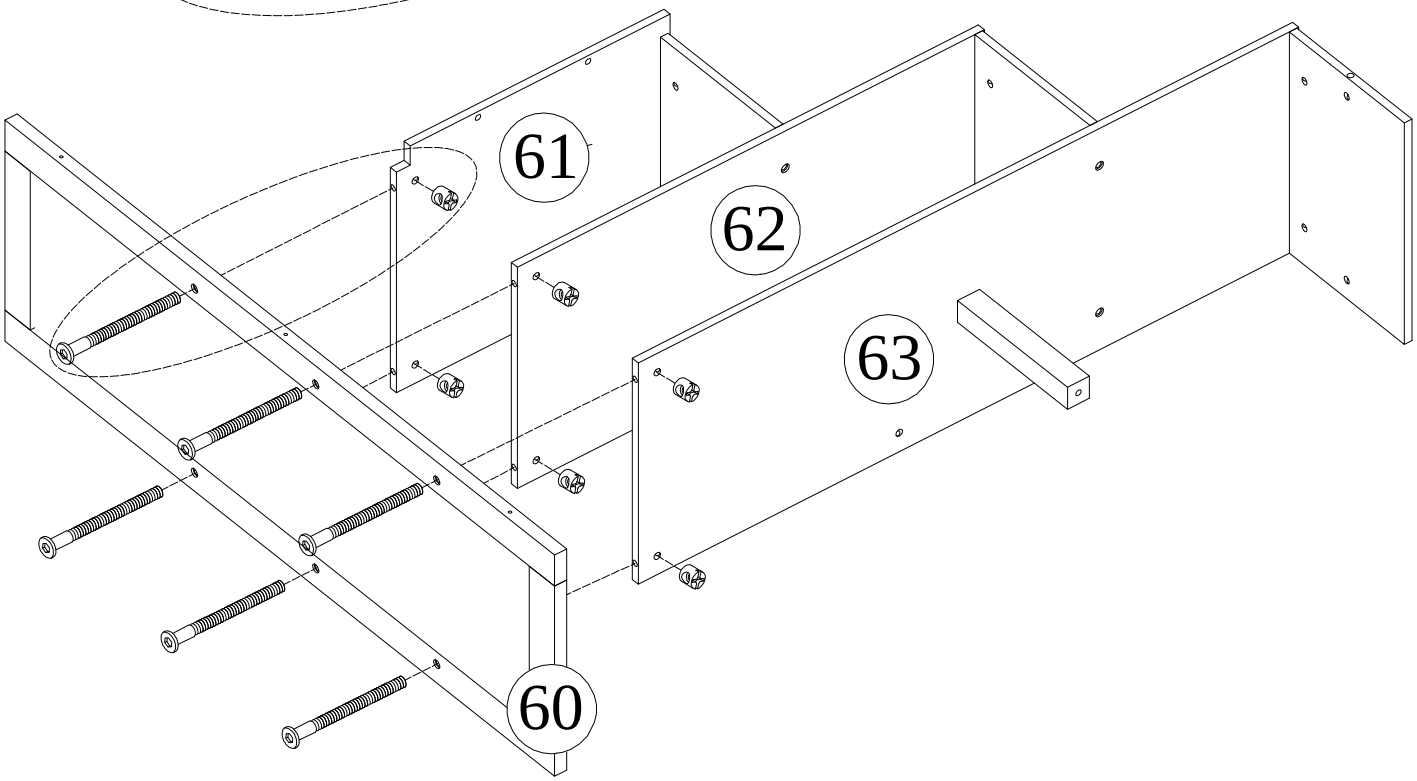

STEP- 23:

B	O	P
	 60	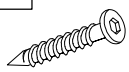 40
4pcs	4pcs	3pcs

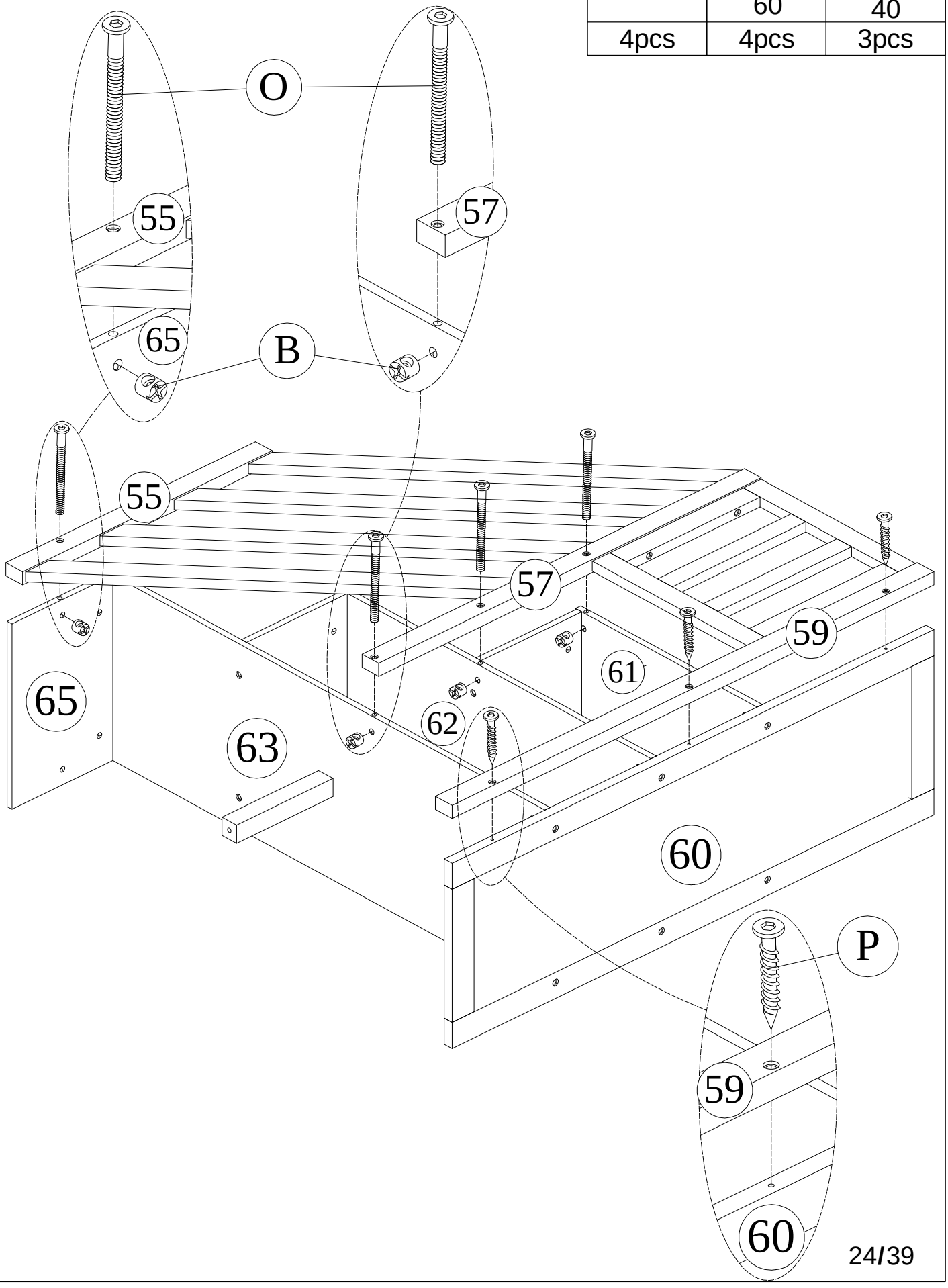

STEP- 24:

B	A
	 80
1pc	1pc

I
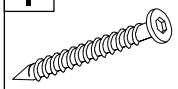 55
3pcs

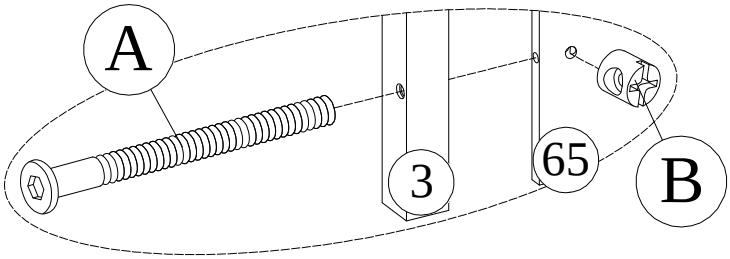

STEP- 25 :

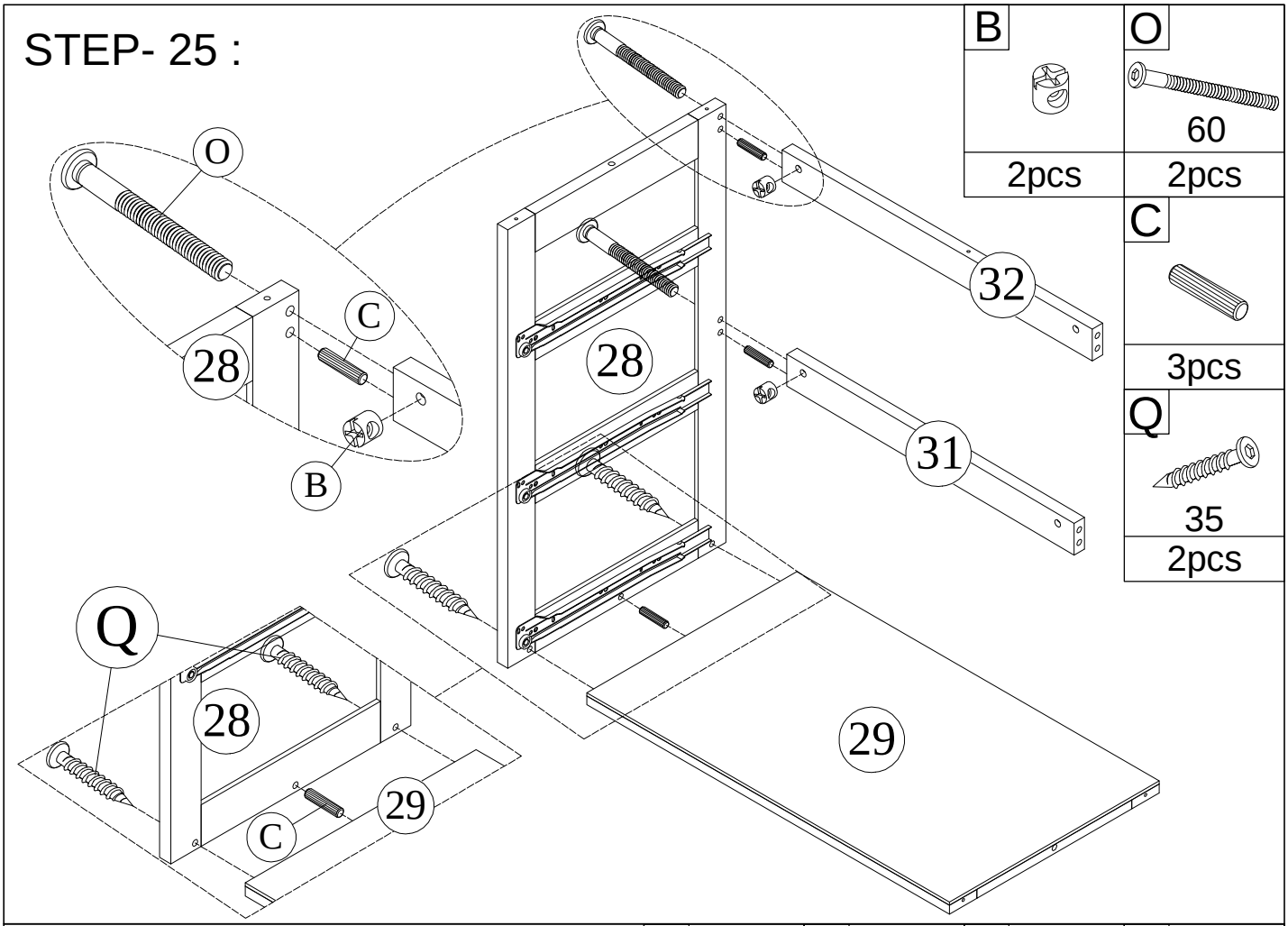

B	O	C	Q
2pcs	60 2pcs	3pcs	35 2pcs

STEP- 26 :

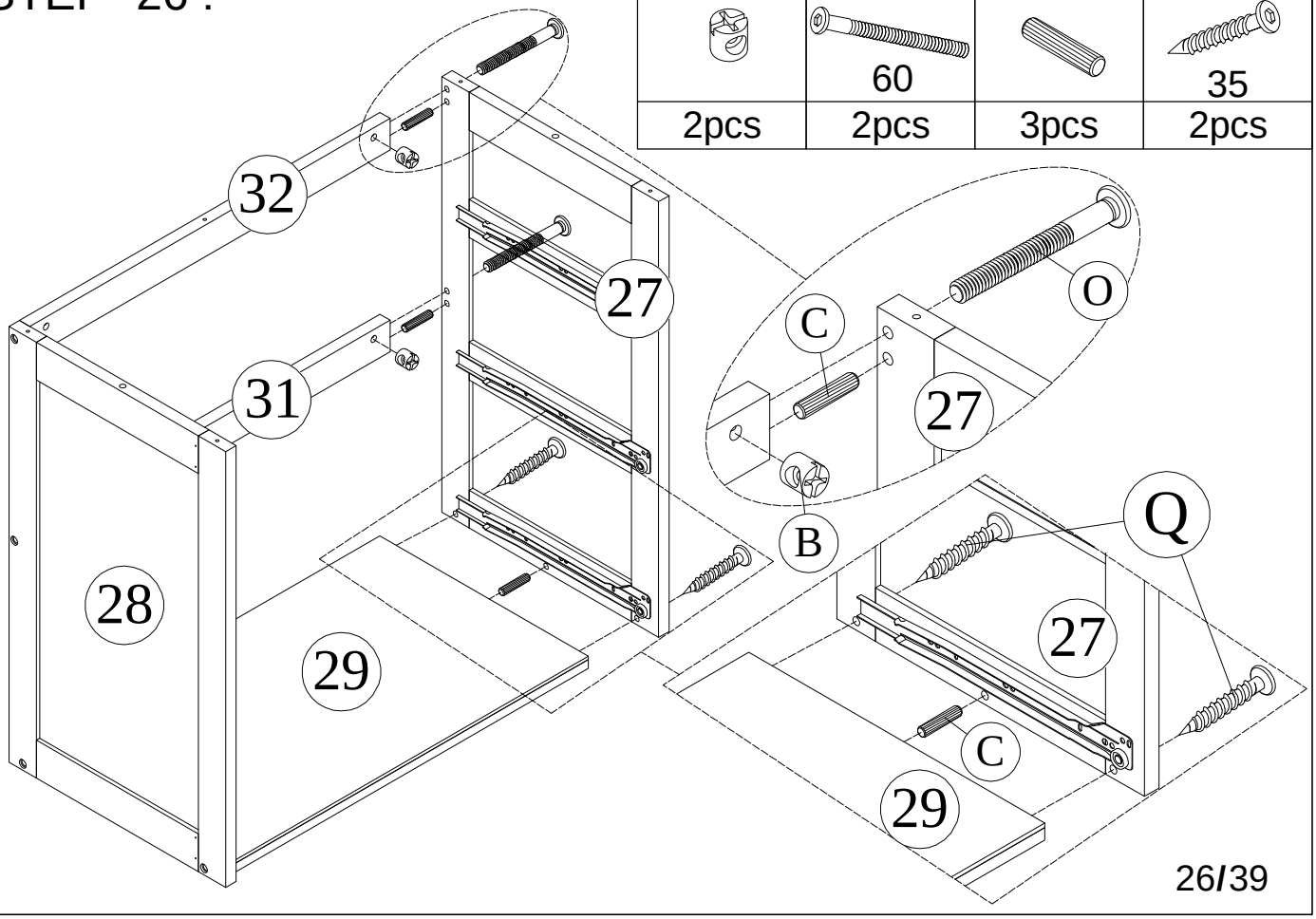

B	O	C	Q
2pcs	60 2pcs	3pcs	35 2pcs

STEP- 27 :

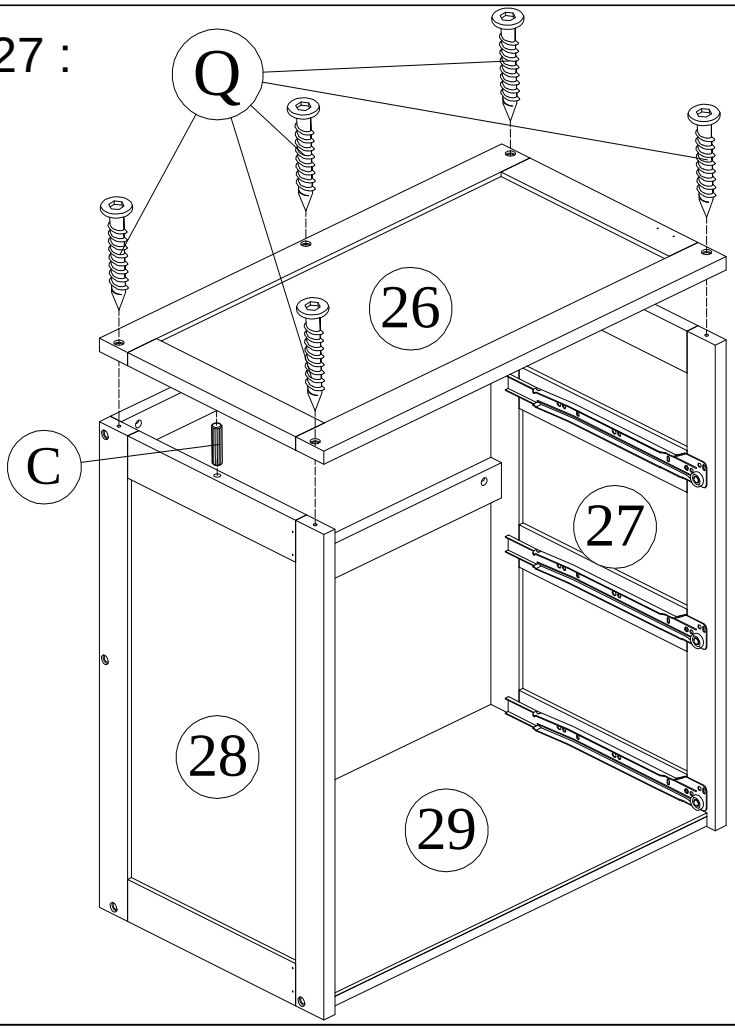

C	Q
	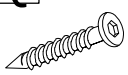 35
2pcs	5pcs

STEP- 28 :

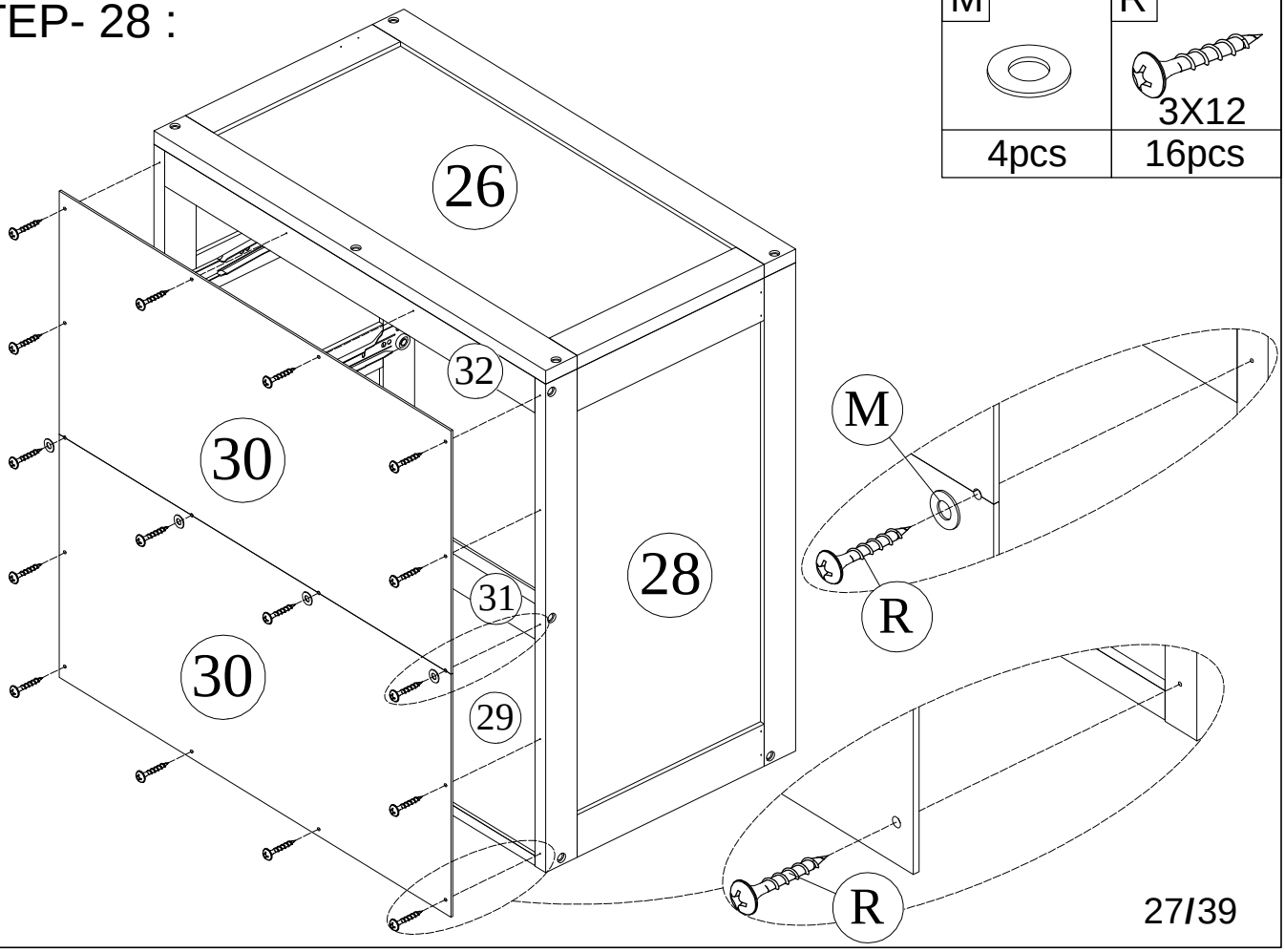

M	R
	3X12
4pcs	16pcs

STEP- 29 :

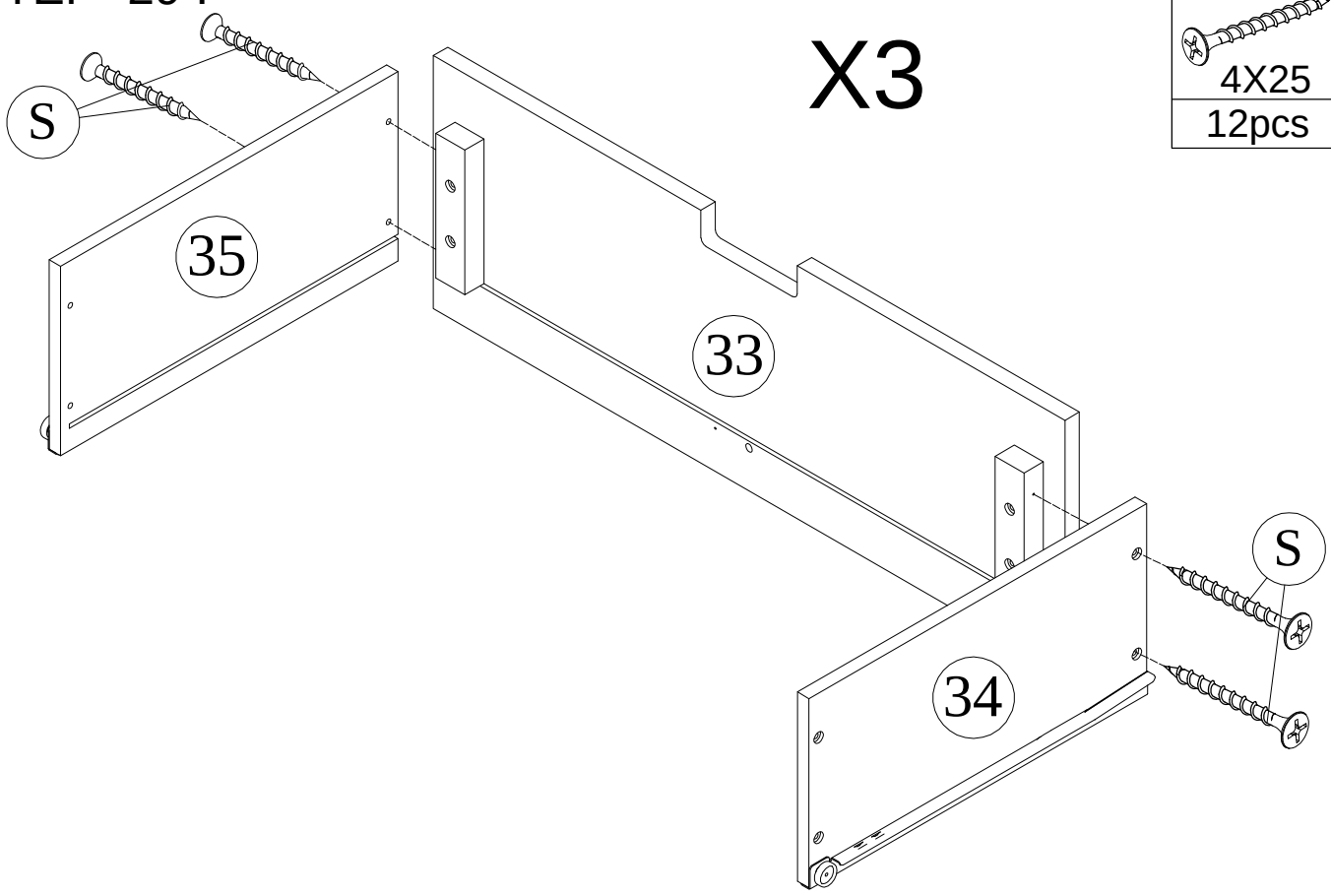

S

4X25

12pcs

STEP- 30 :

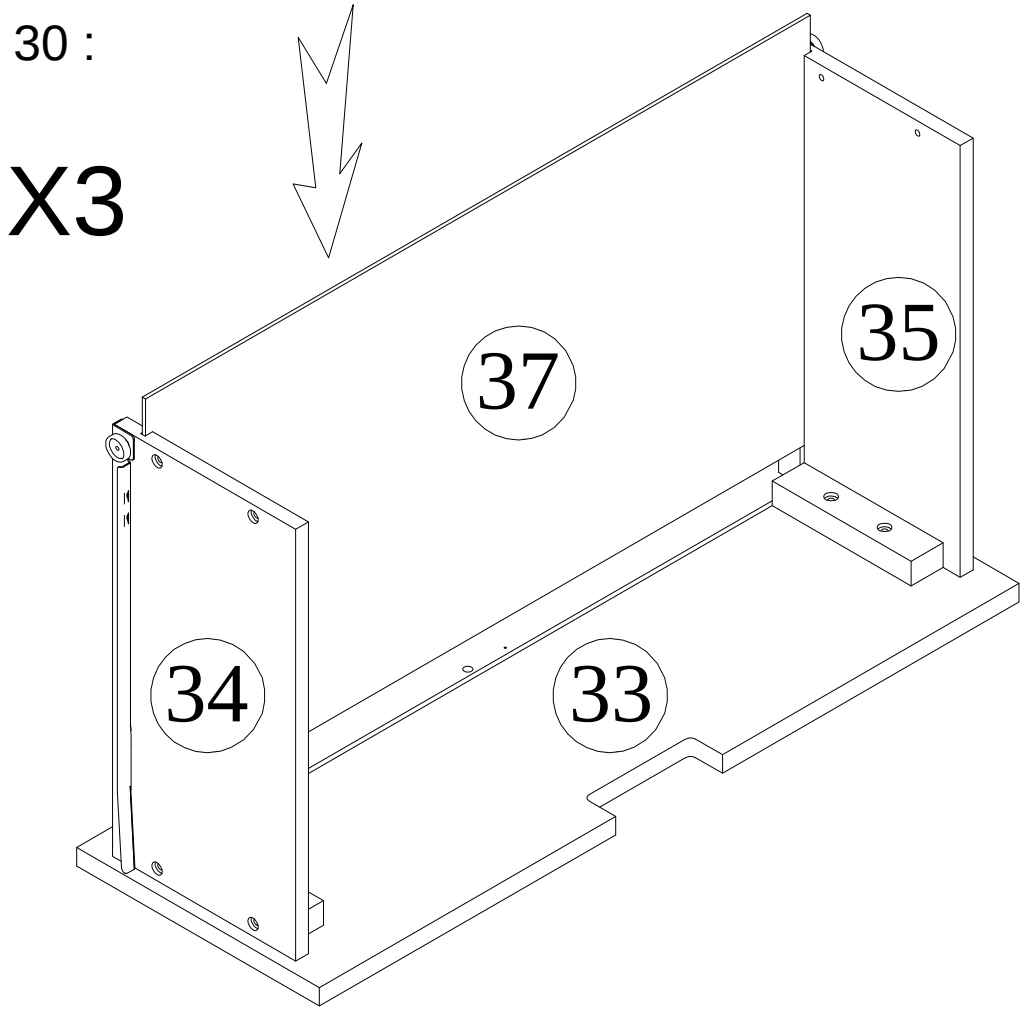

STEP- 31 :

X3

T	S
 6X30	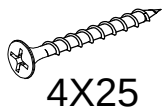 4X25
3pcs	15pcs

STEP- 32 :

X3

R	Y
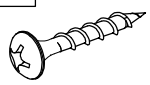 3X12	
6pcs	3pcs

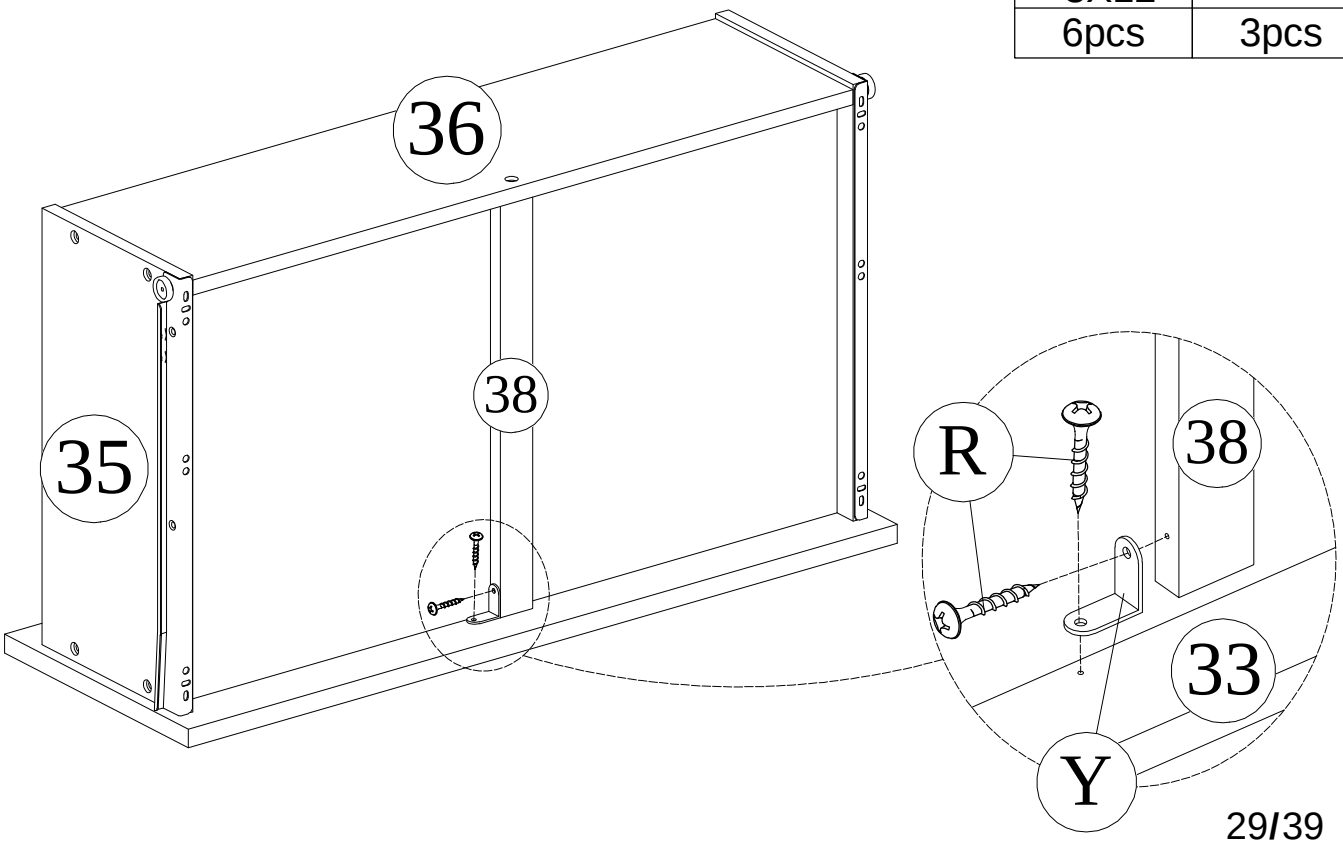

STEP- 33 :

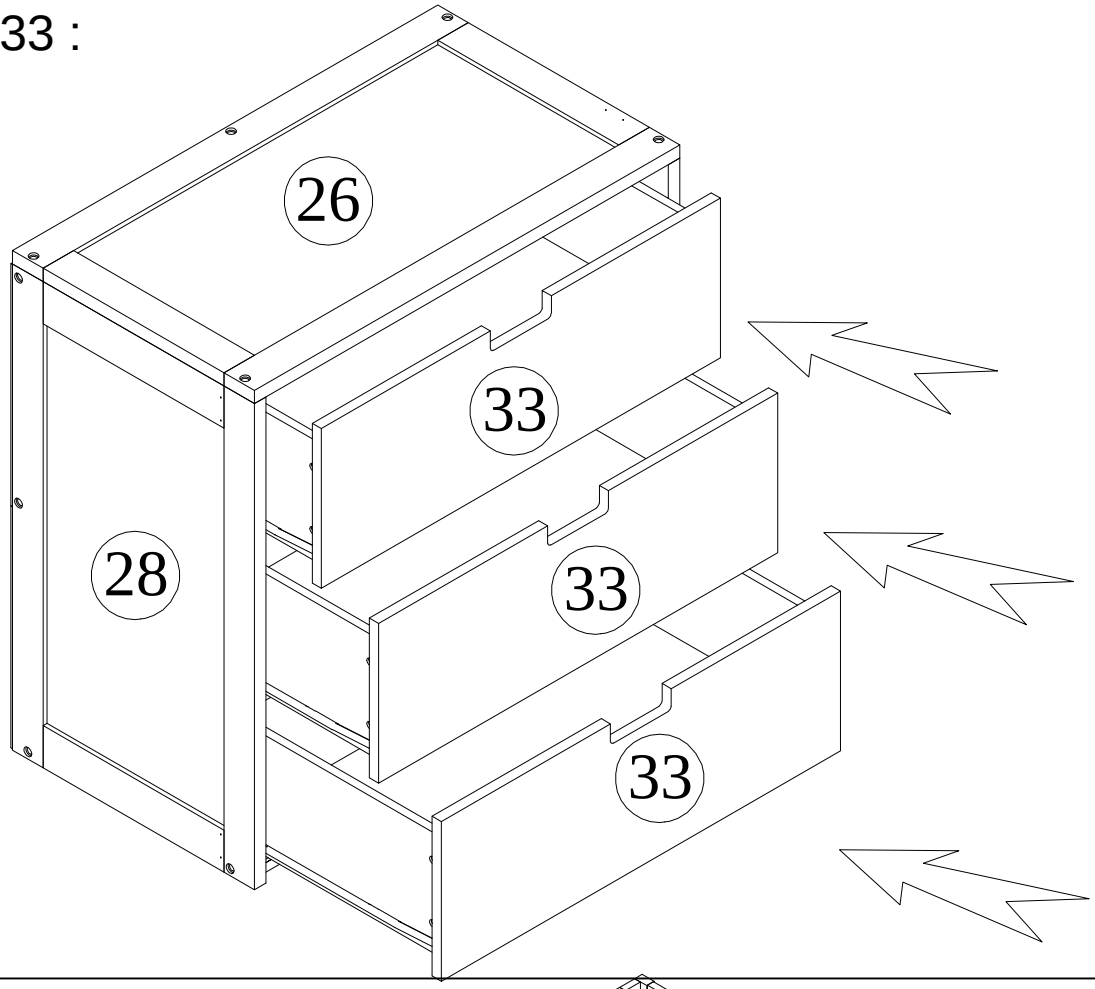

STEP- 34 :

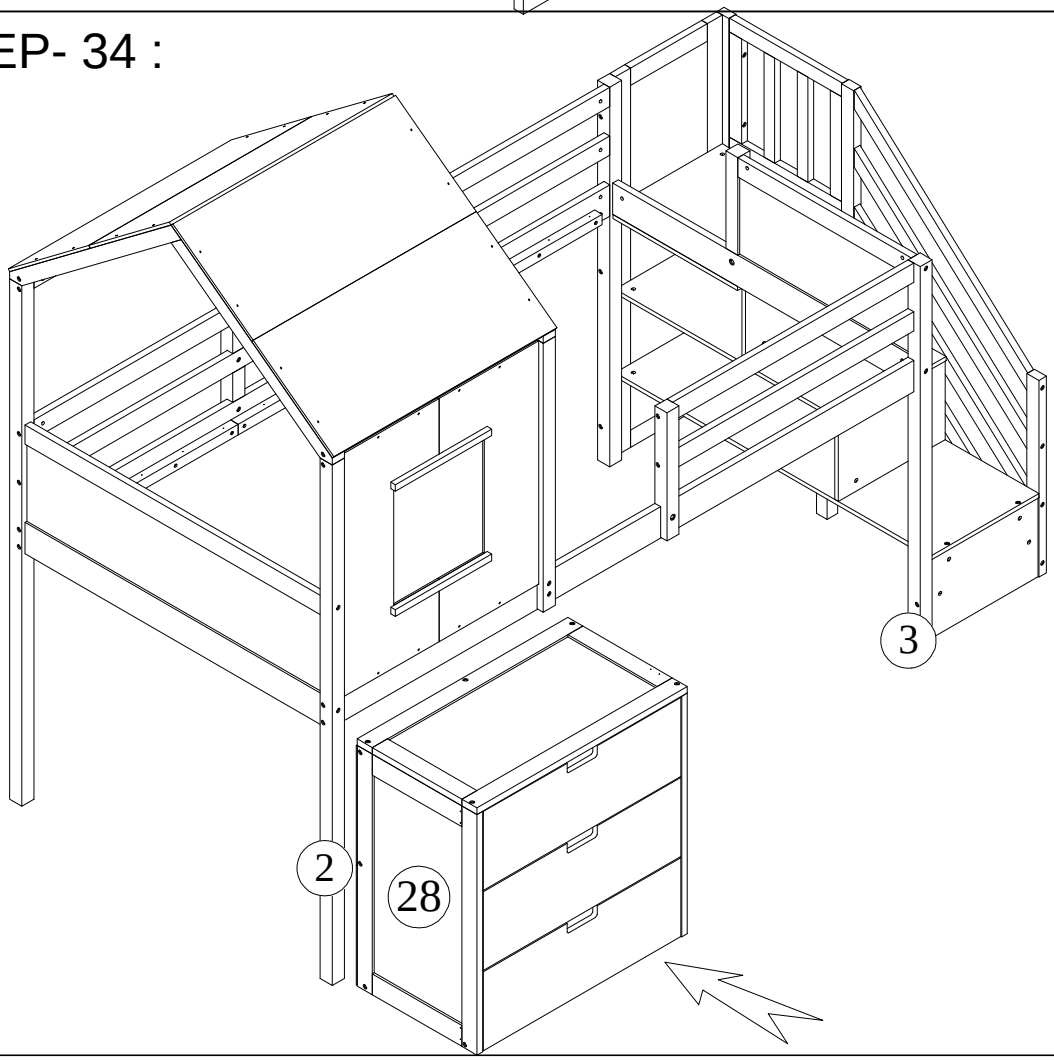

STEP- 35 :

Z	AB	X	AC
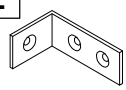	 4X15	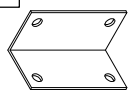	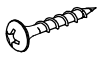 3.5X12
1pc	3pcs	2pcs	8pcs

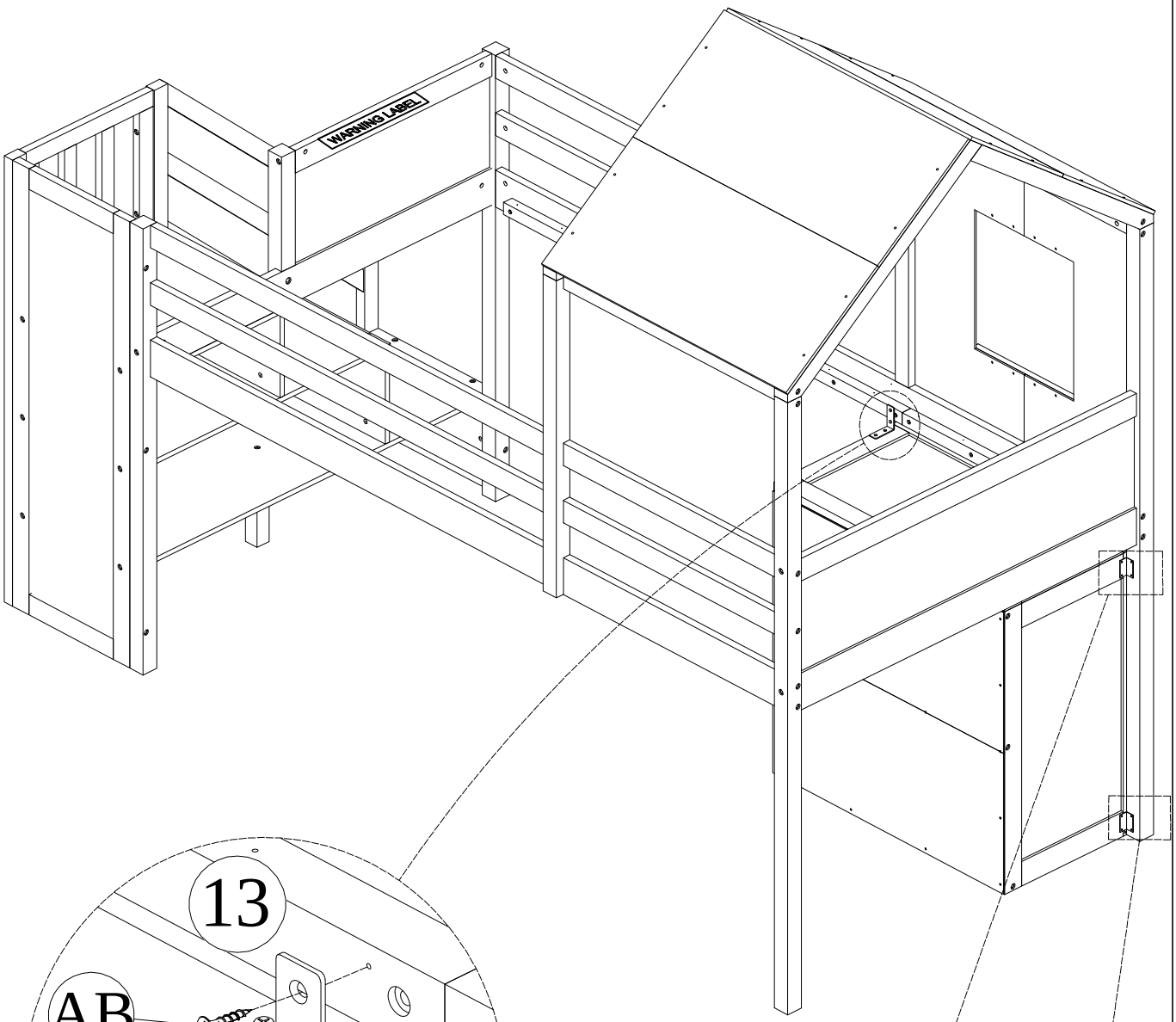

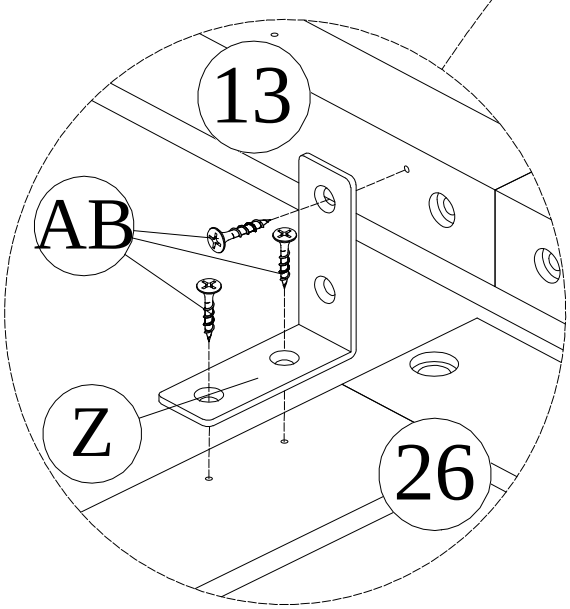

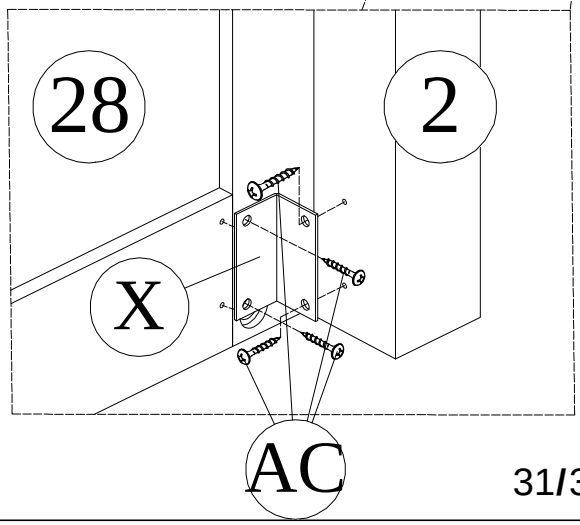

STEP- 36 :

X2

N	B	C
50		
8pcs	8pcs	4pcs

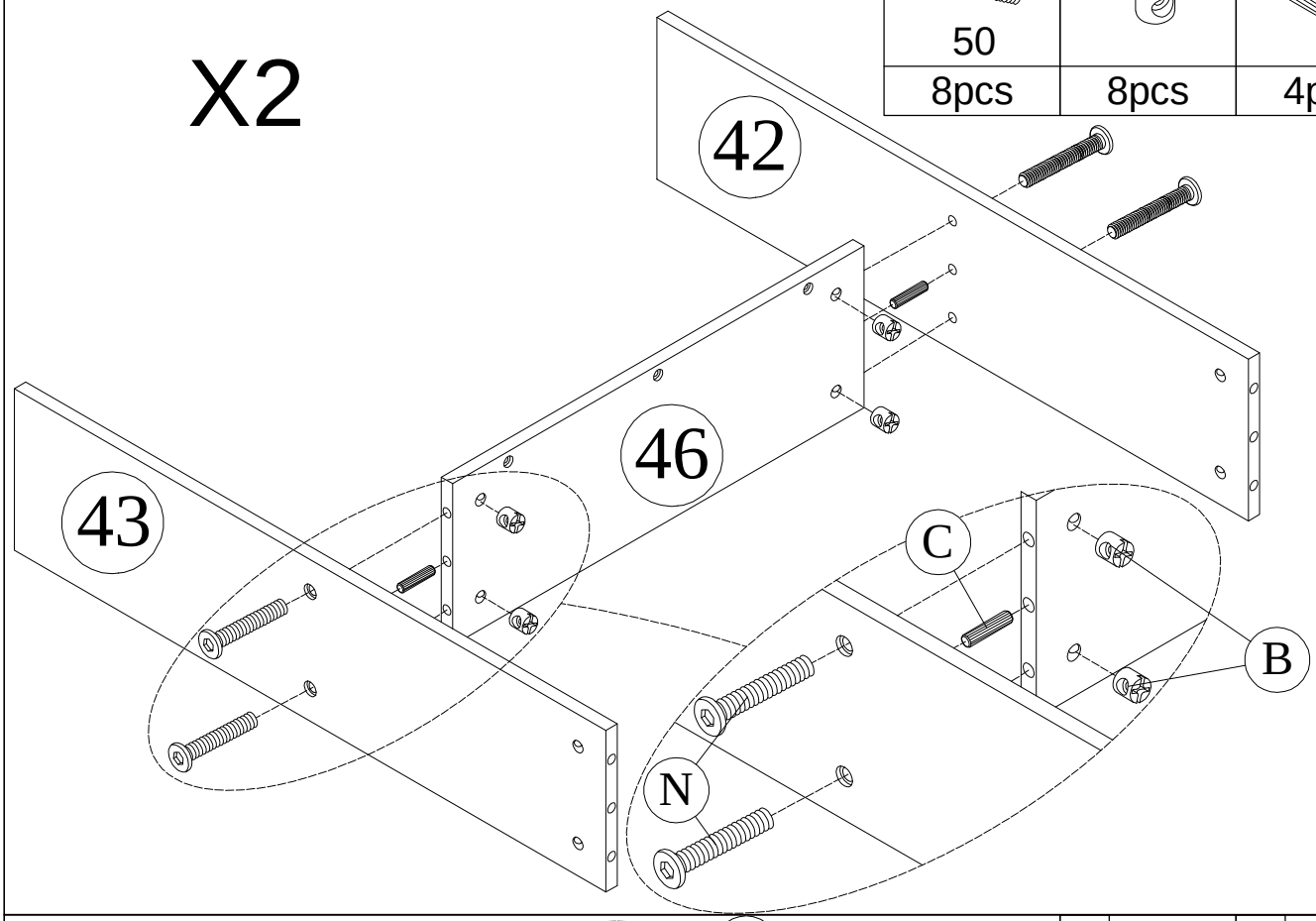

STEP- 37 :

X2

N	B
50	
8pcs	8pcs

C
4pcs

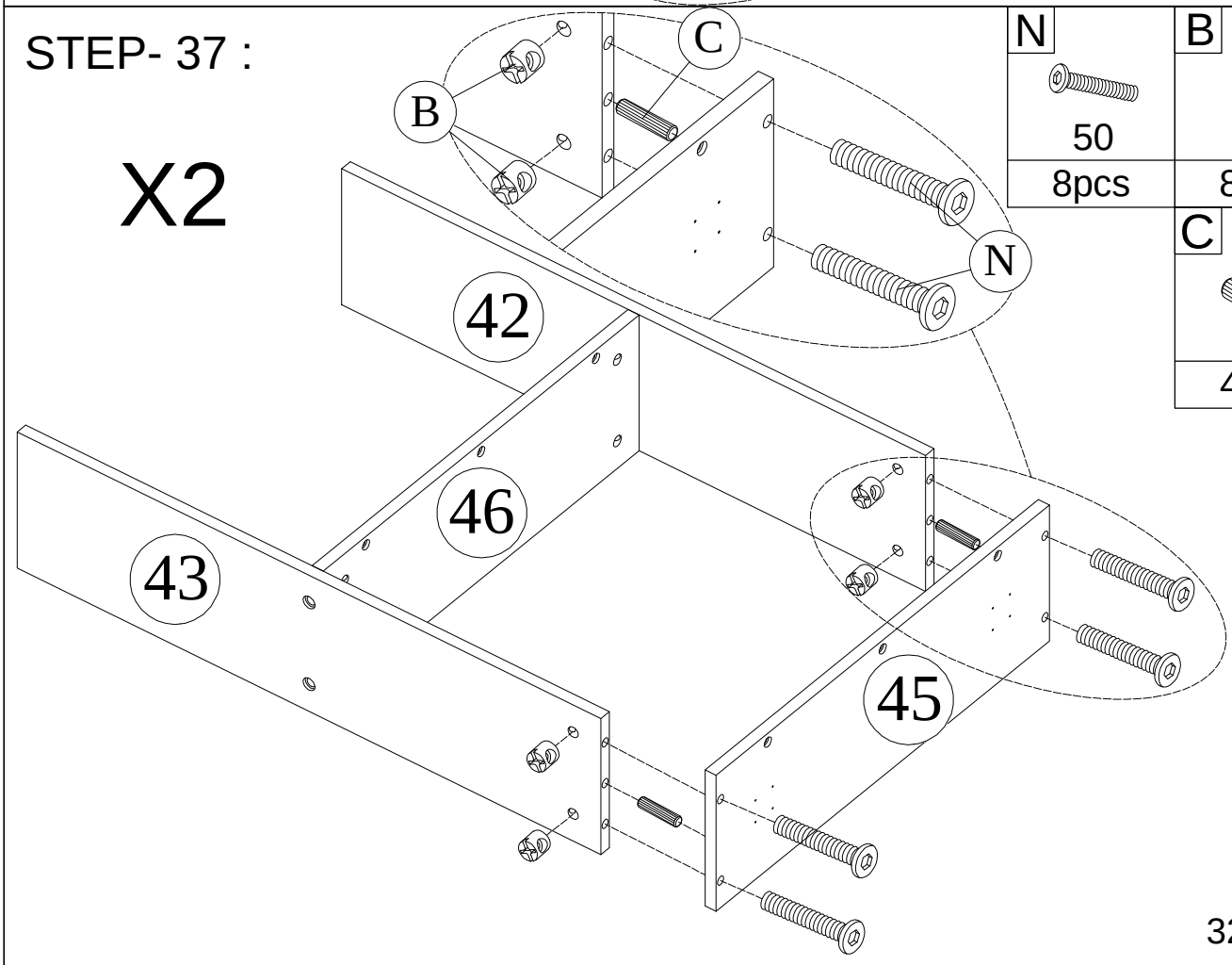

STEP- 38 :

X2

S

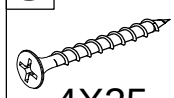

4X25

12pcs

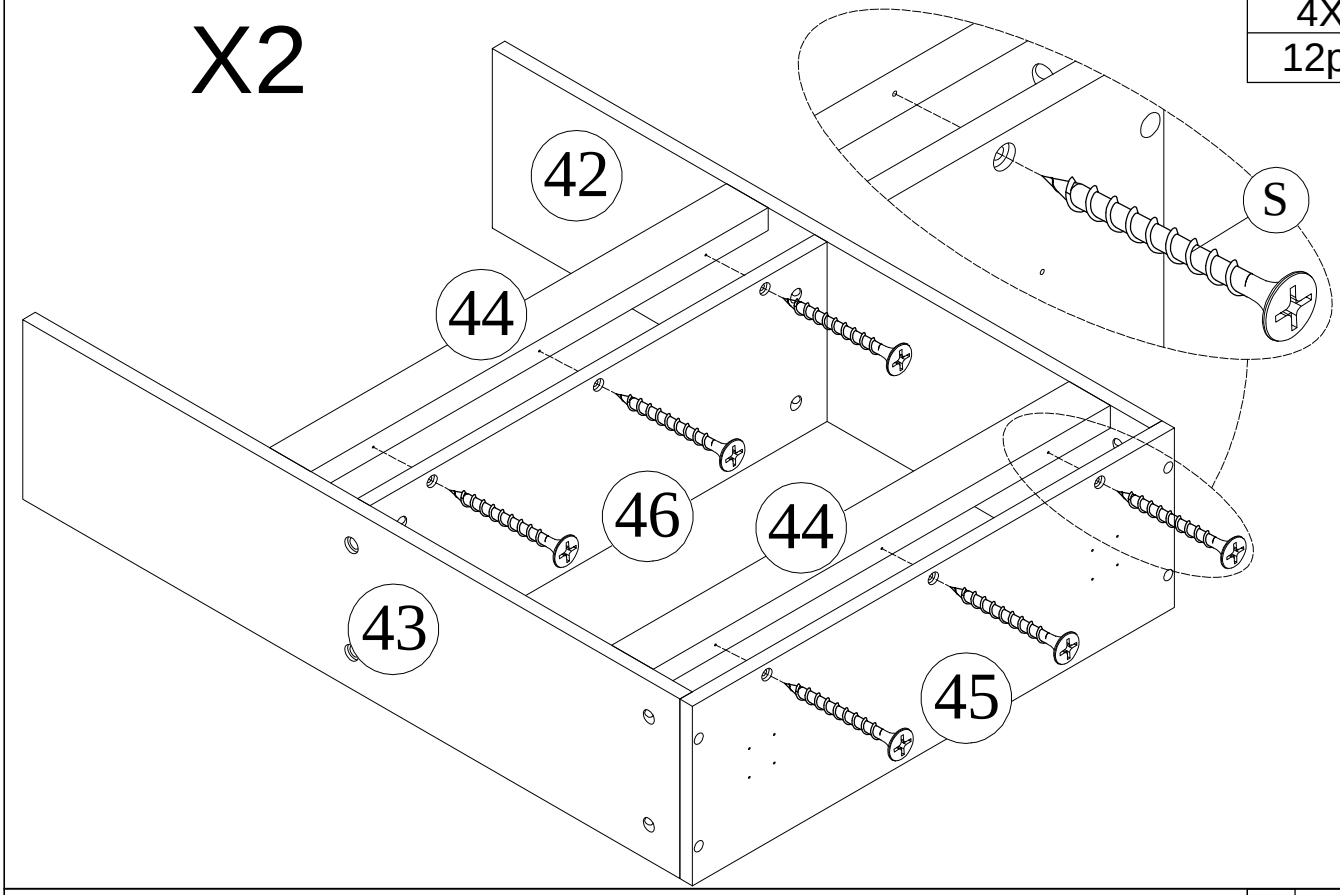

STEP- 39 :

X2

R

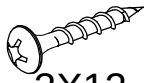

3X12

24pcs

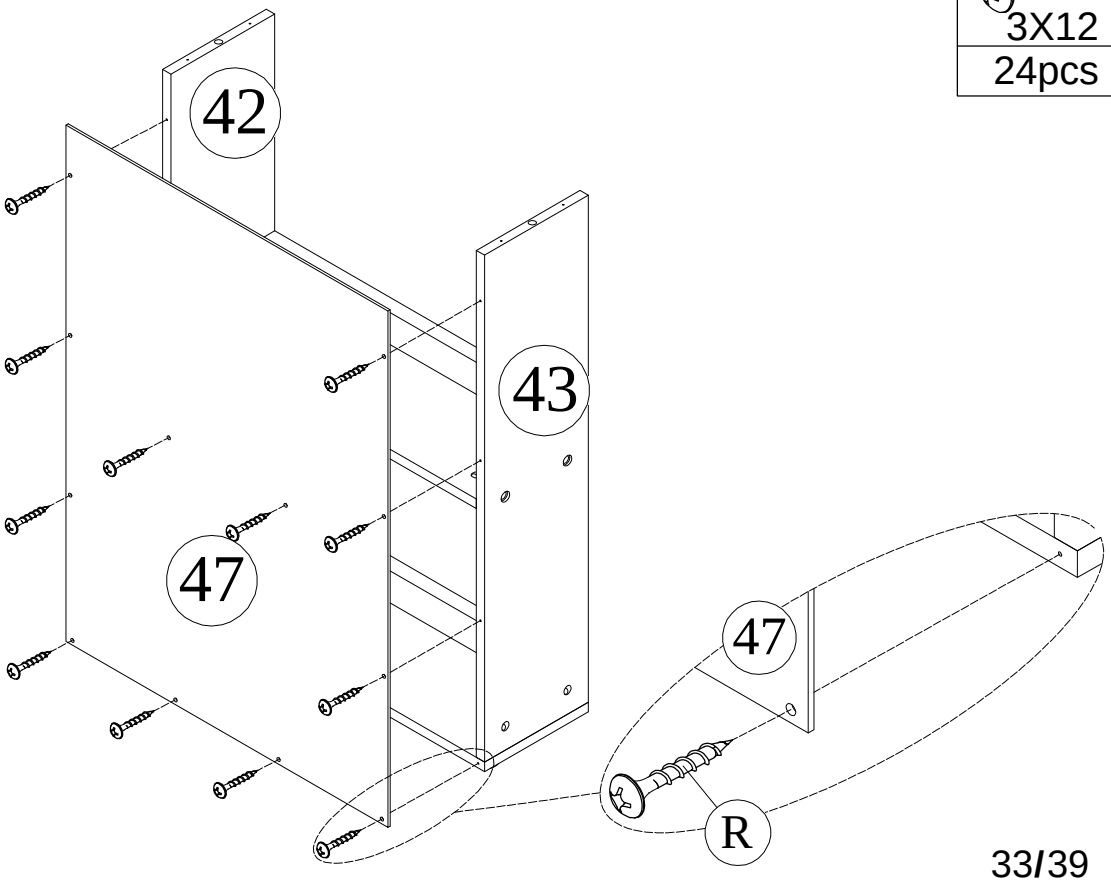

STEP- 40 :

X2

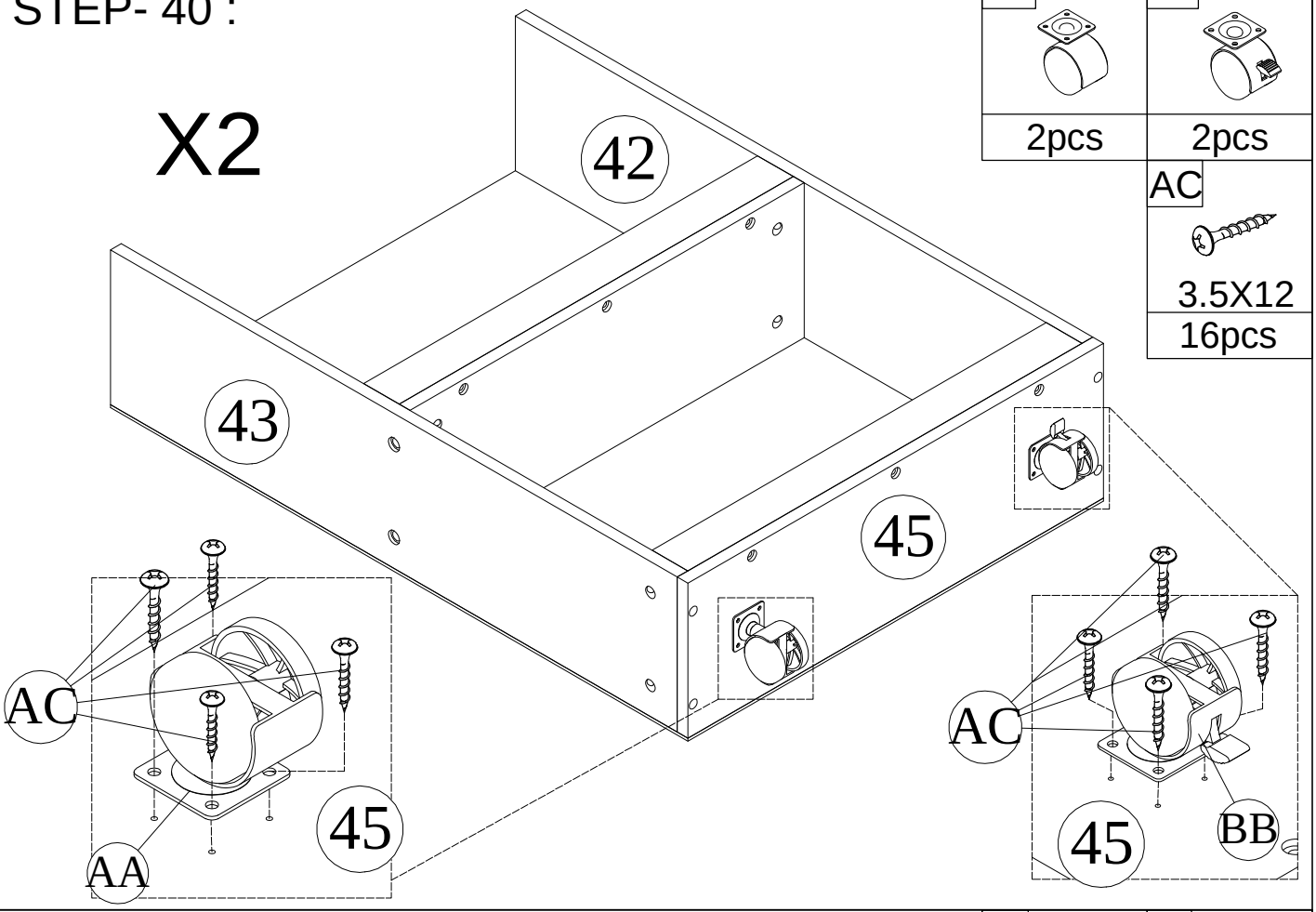

AA	BB
2pcs	2pcs

AC
3.5X12
16pcs

STEP- 41 :

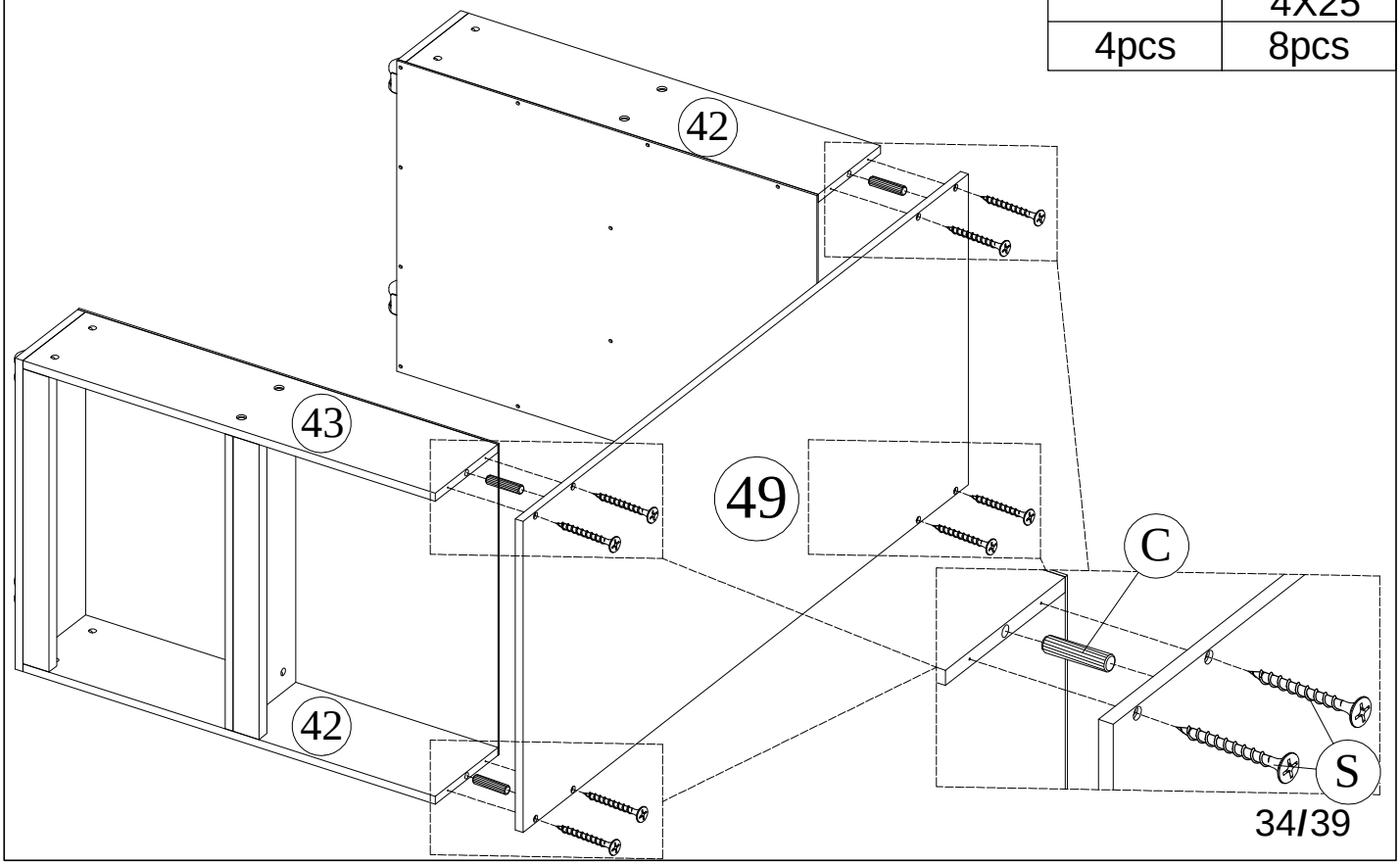

C	S
4pcs	4X25 8pcs

STEP- 42 :

C	CC
	 4X30
2pcs	8pcs

STEP- 43 :

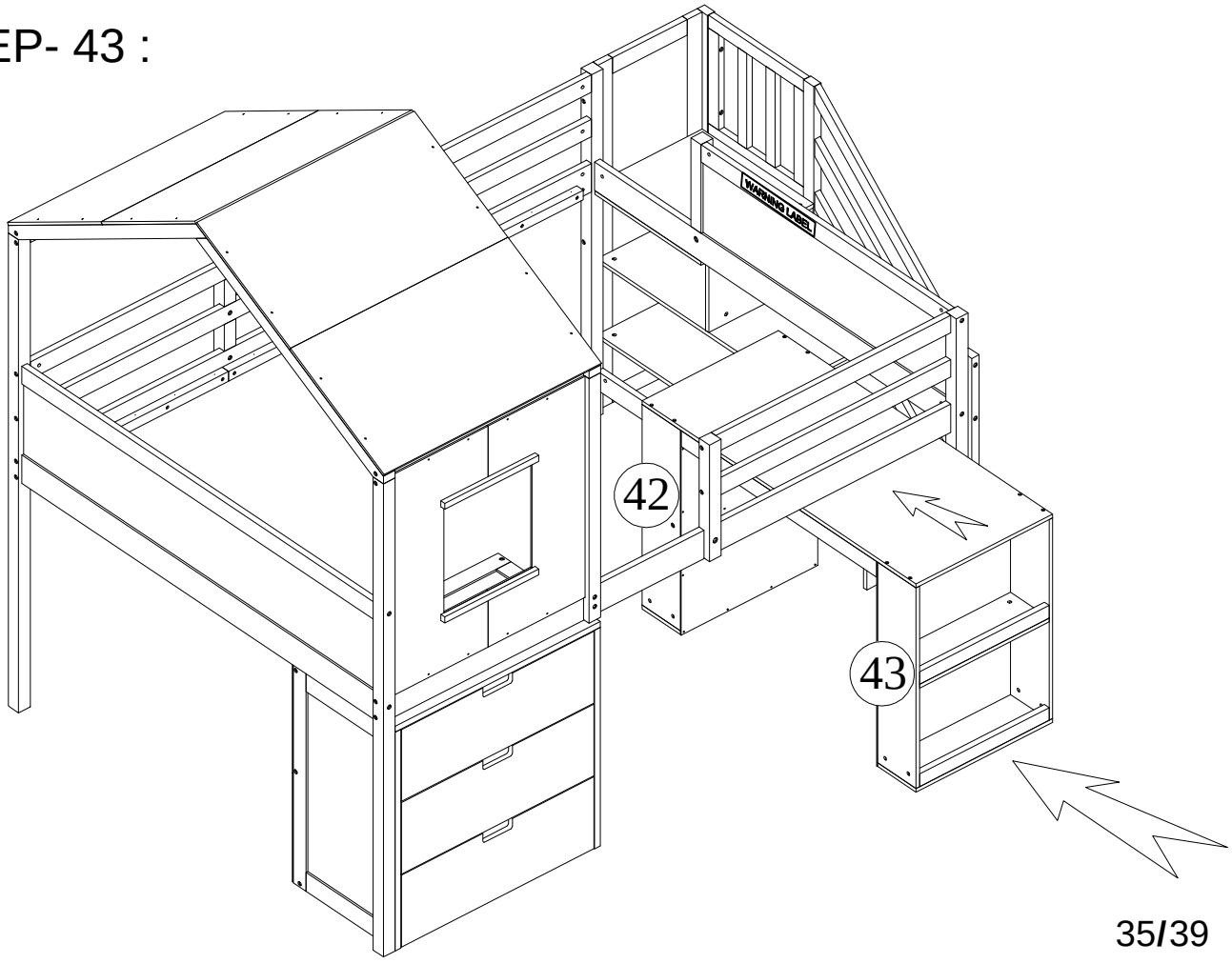

STEP- 44 :

C	Q
	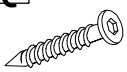 35
10pcs	12pcs

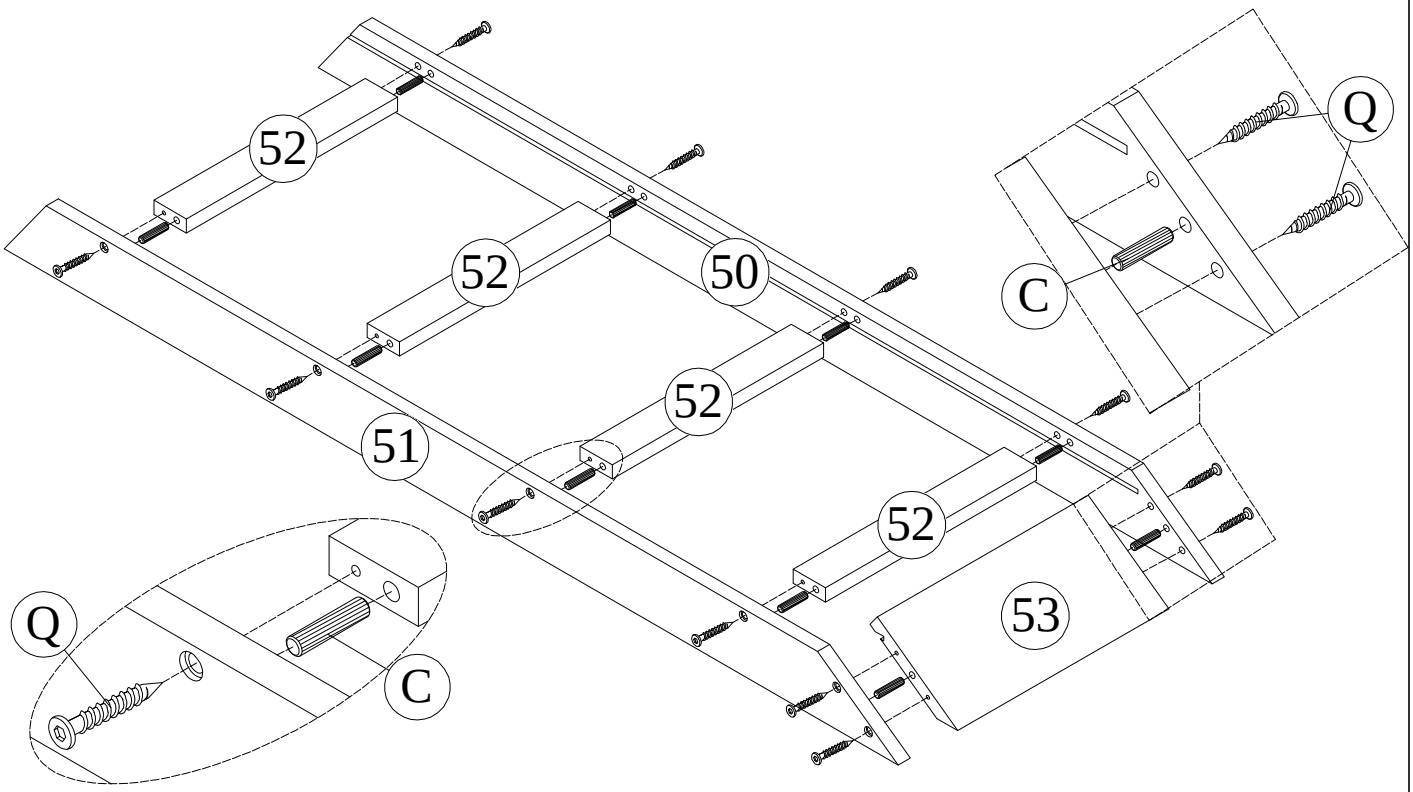

STEP- 45 :

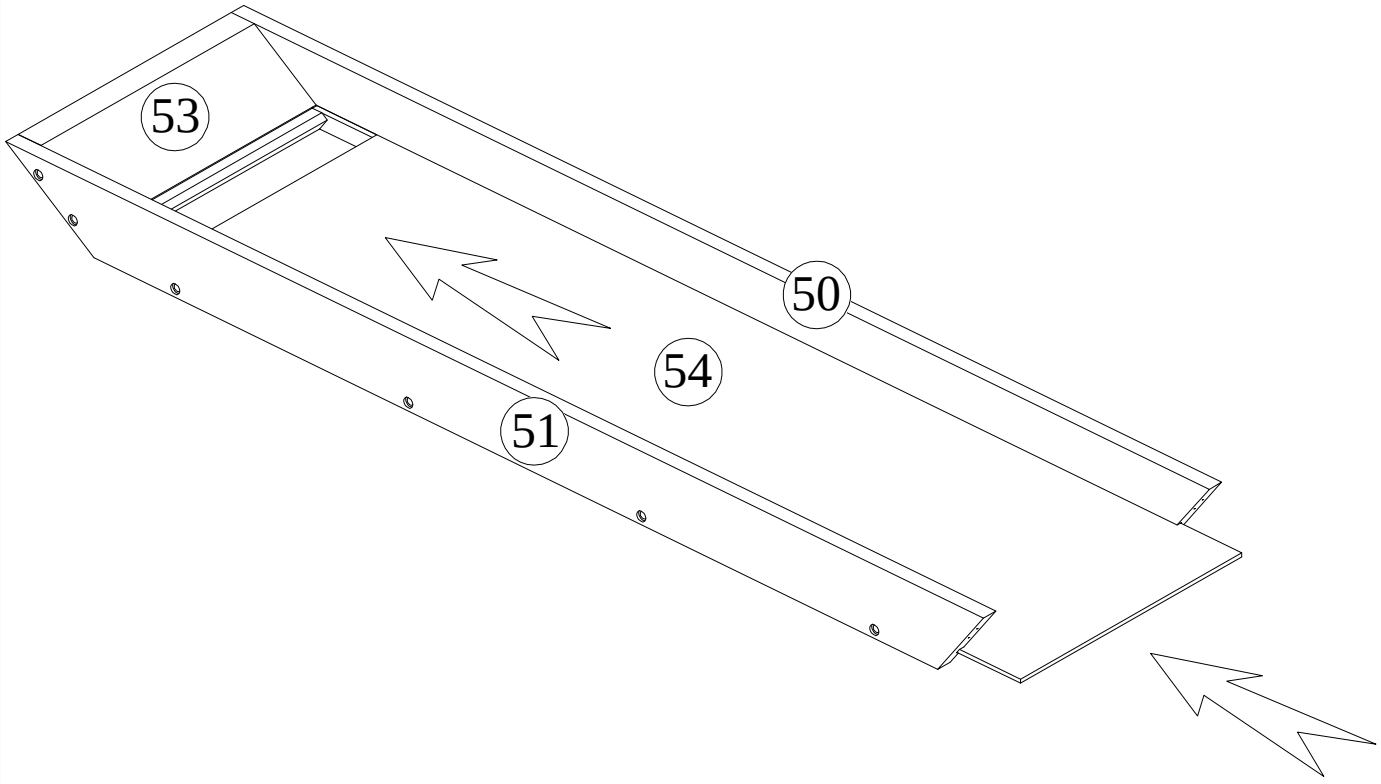

STEP- 46 :

AB	AE
 4X15	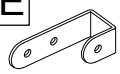
4pcs	2pcs

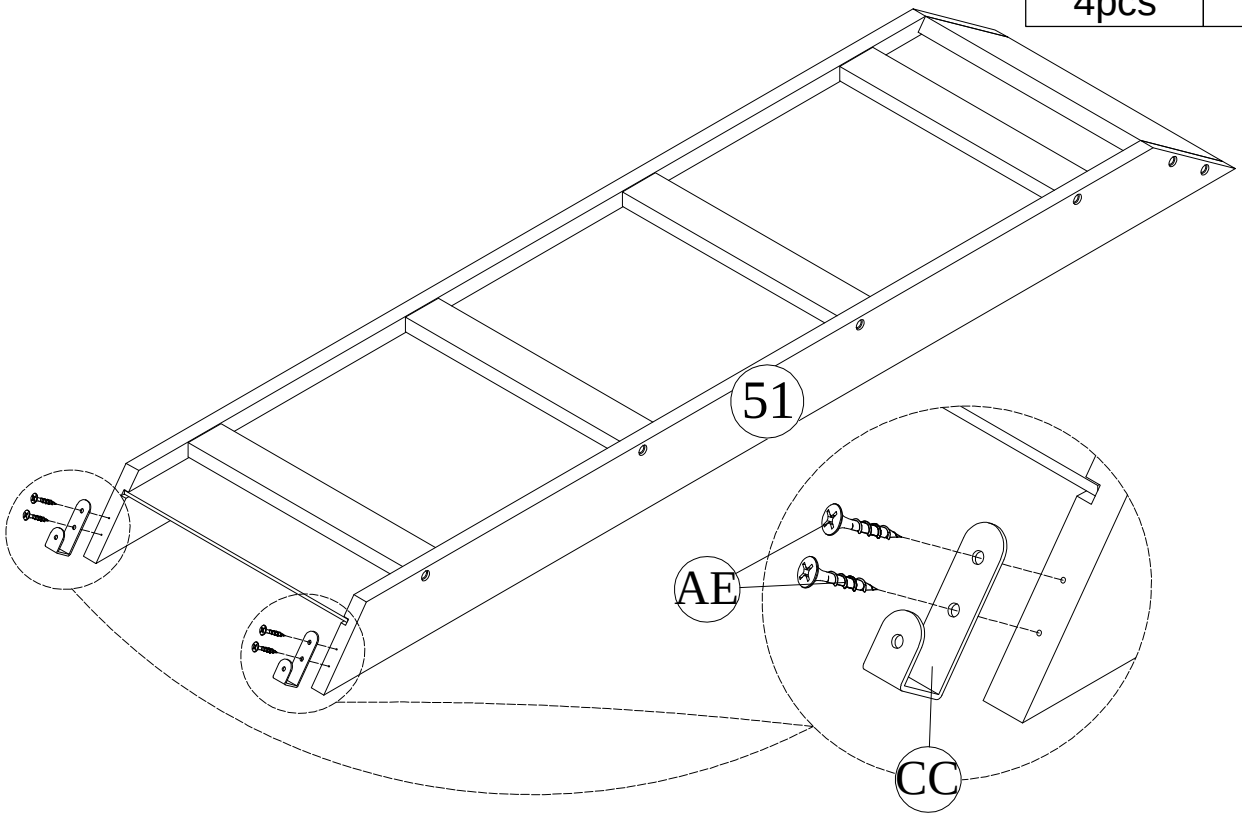

STEP- 47 :

AB
 4X15
2pcs

STEP- 48 :

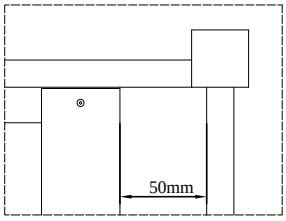

L



D4X35

28pcs

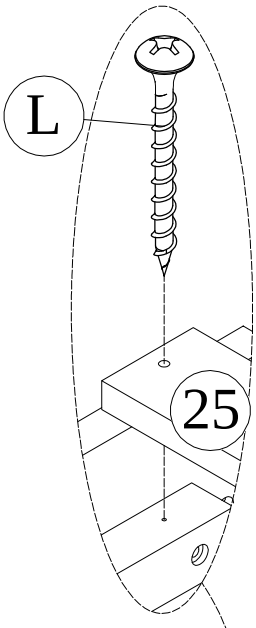

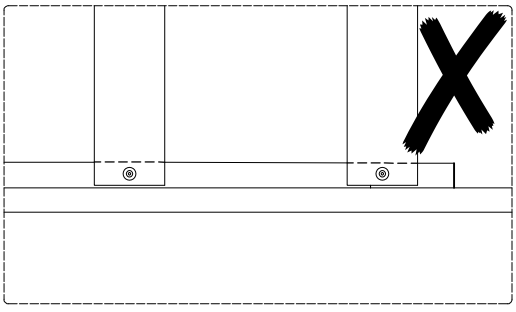

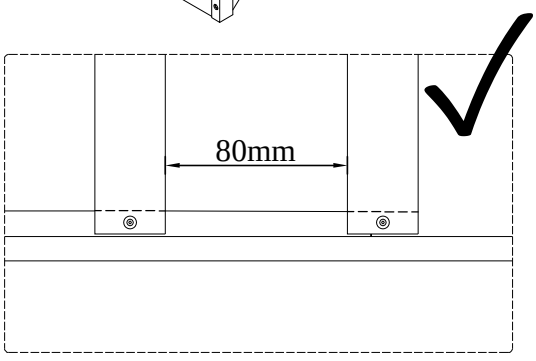

FINISH:

