ASSEMBLY INSTRUCTIONS

Plant Stand

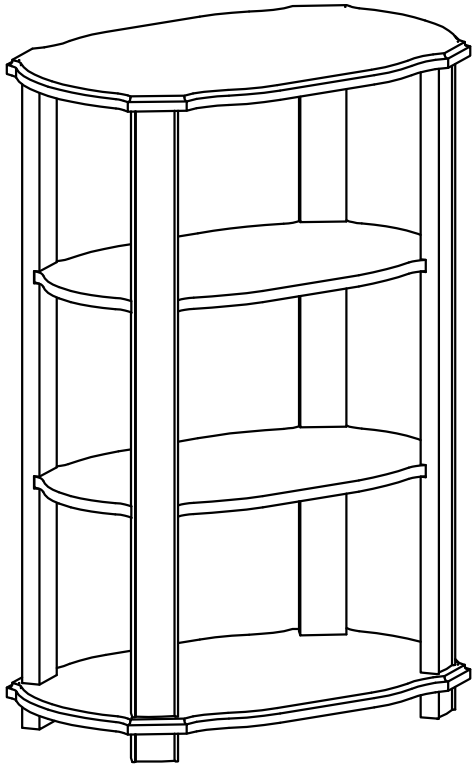

NOTE TO CUSTOMERS:

- For ease and speed of assembly we recommend that before you commence each step of the assembly that you identify all the parts required to complete that step.
- We recommend that where possible you allow sufficient space to assemble the item as close as possible to the place where it will be once assembled.
- For the protection of your furniture we recommend that the product is placed on protected surfaces during assembly to prevent any damage.
- During assembly do not over tighten, as this may damage the product.
- Please ensure you retain all the product packaging until the item completely assembled.
- Please periodically check all fittings and re-tighten as necessary.
- Please never allow any liquids to remain on your furniture as absorption can cause the wood to warp or finish to de-laminate.
- It is recommended that this item should be assembled by two adults.

Part List :

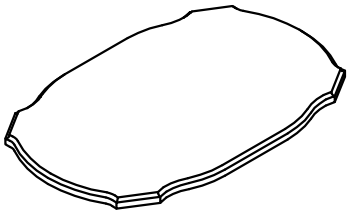 A. Top panel Qty: 1	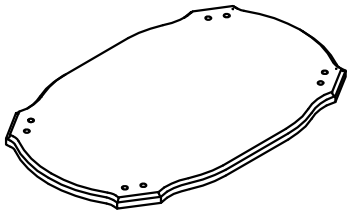 B. Bottom Panel Qty: 1	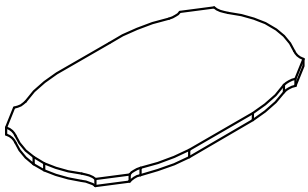 C. Shelf Qty: 2
 D. Support Bar Qty:4	 E. Leg Qty: 4	

Hardware List :

 a. Plate with Screw Qty: 4	 b. Wood **Dowel** Qty: 8	 c. Bolt Qty: 8	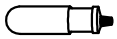 d. Glue Qty: 1

Note:

- Read these instructions carefully before assembling.
- Tools required : Phillips screwdriver, flat screwdriver.
- Find a clean, smooth area on which to work , such as a carpet, in order to avoid scratching the wood surfaces.
- Wait to dispose of the packing material until assembly is complete and all parts and hardware are accounted for.
- Two or more people might be required for assembly.

To use Dowels:

1. Add glue (about ¼ full) in the hole(s) of each board to be joined.
2. Insert the Dowel(s) and join boards.
3. Wipe excess glue with a damp paper towel.

To use Cam Locks:

1. Insert Cam Pin until snug 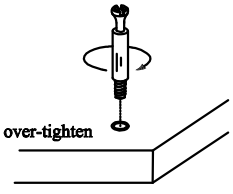 Do not over-tighten	2. Set boards together 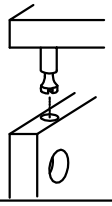	3. Insert Cam Lock 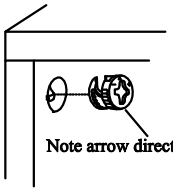 Note arrow direction	4. Turn Cam Lock clockwise (half a turn) 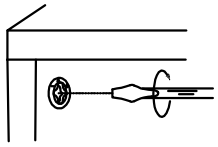 if it won't turn halfway, back out the Cam Pin ¼ turn and try Cam Lock again.

Step 1:

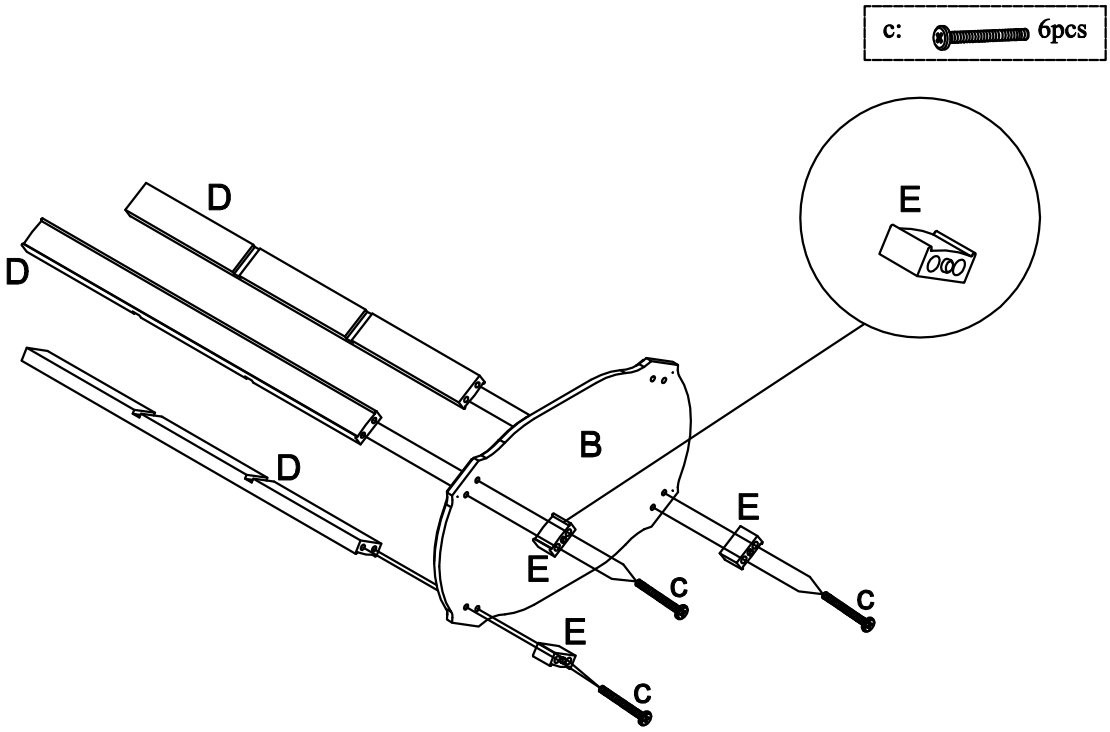

Assemble Legs (E) and Support Bars (D) to Bottom Panel (B) using Bolts (c).

Step 2:

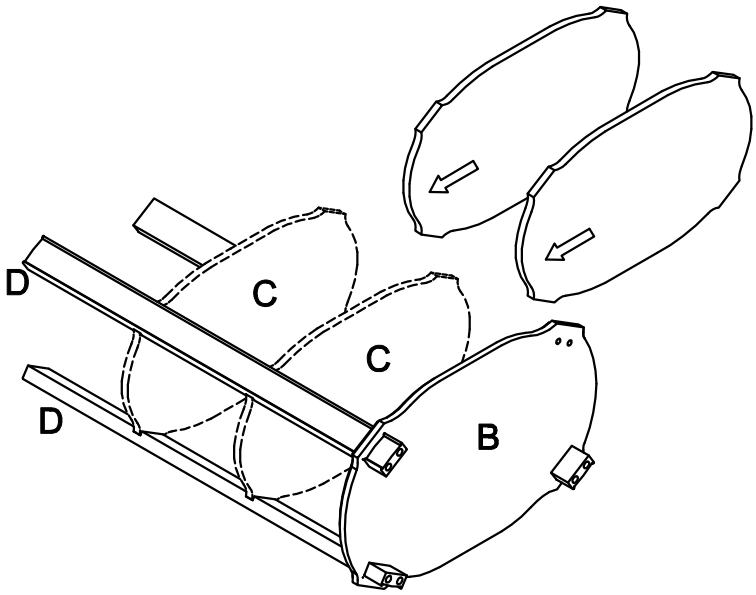

Insert Shelves (C) into the grooves on Support Bars (D) .

Step 3:

c: 2pcs

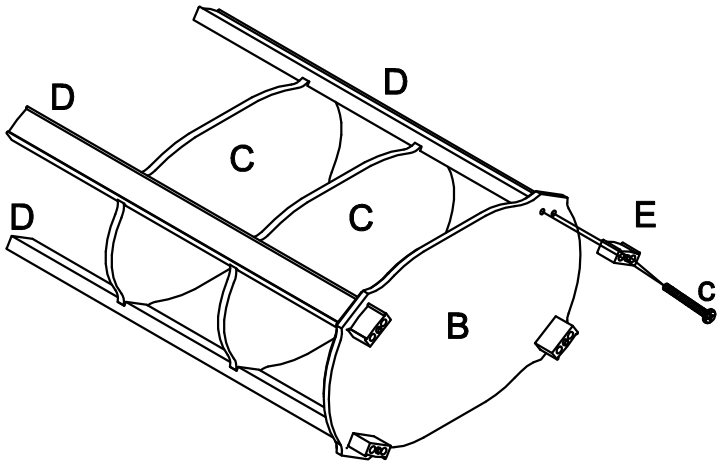

Attach the last Support Bar (D) to Shelves (C) , then assemble Leg (E) to Bottom Panel (B) and Support Bar (D) using Bolts (c).

Step 4:

b: 8pcs

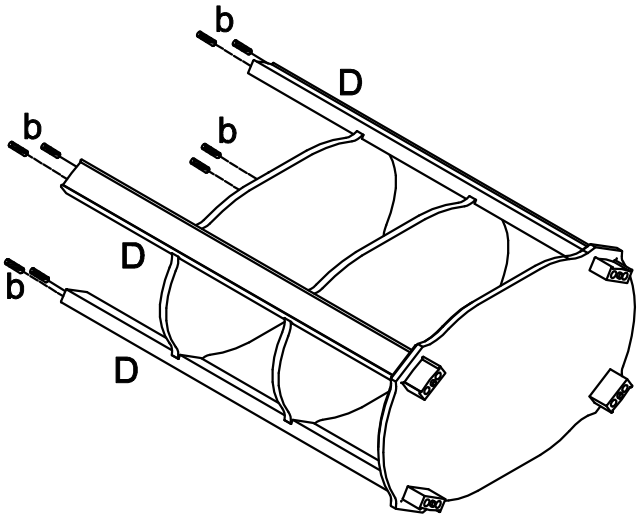

Insert Wood Dowels (b) into the holes on Support Bars (D).

Step 5:

a: 4sets

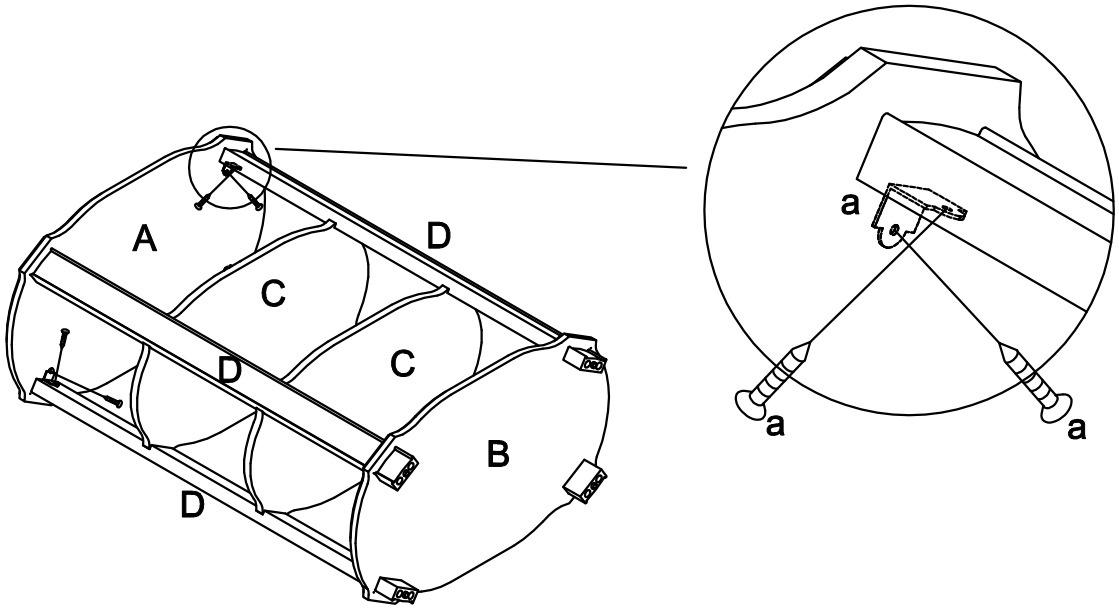

Place Top Panel (A) onto Support Bars (D).Then tighten Support Bars (D) to Top Panel (A) by Metal Plates (a) with included screws.

Step 6:

