INSTALLATION

Product Manual

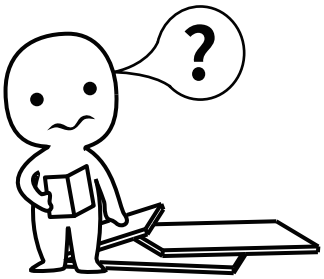

IMPORTANT INFORMATION!

please read the entire manual before starting to assemble and/or using this product.follow the manual thoroughly and keep it for further reference.

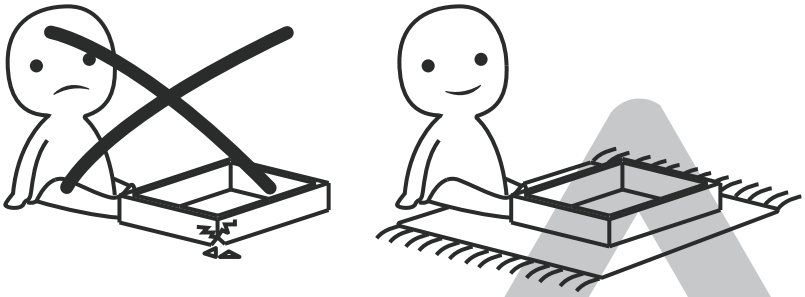

AVOID SCRATCHES!

In order to avoid scratching this furnuture should be assembled on a soft layer-could be a rug.

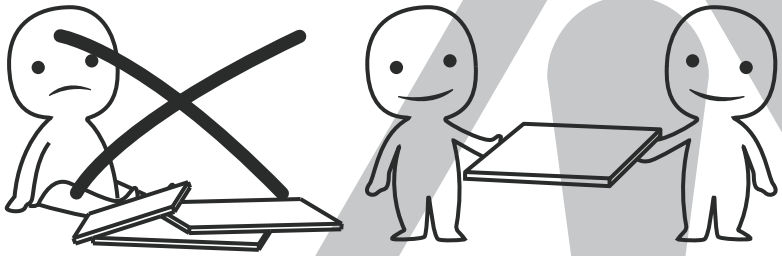

IMPROVE EFFICIENCY !

Try to find a partner to install with you, which can speed up the installation efficiency and shorten the time.

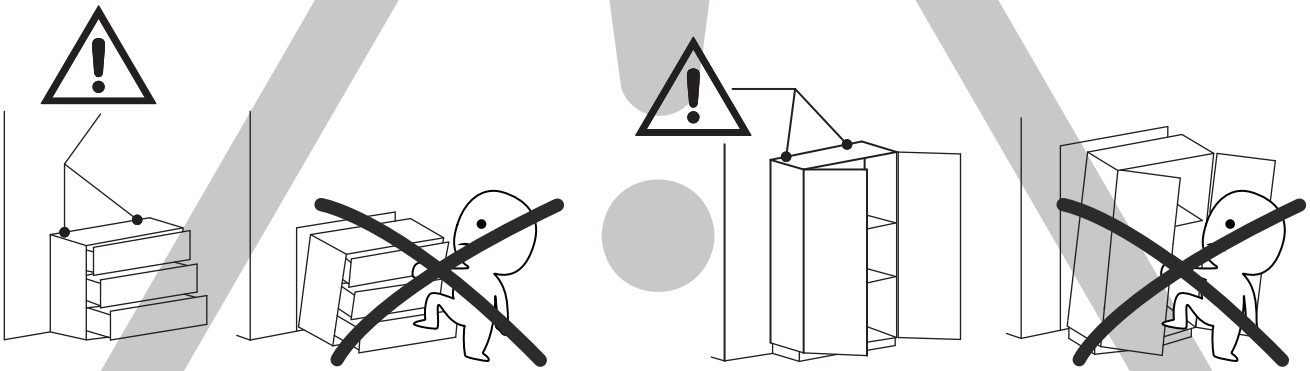

ANTI-TOPPLE WARNING !

Overturned furniture can cause serious or fatal crush injuries. To prevent tipping over, be sure to use the wall attachment, if not included with this product. Please purchase the wall attachment that fit your wall. If unsure, seek professional advice. Please read and follow each step of the instructions carefully.

IMPORTANT !

It is important that any product which is assembled using any kind of screw is re-tightened 2 weeks after assembly,and once every 3 months - in order to assure stability through-out the lifespan of the product.

For regular maintenance and cleaning of the product, for the frame, please use a rag dipped in neutral detergent to fully wipe it, and then dry it with a clean rag.For glass materials, wipe with a rag dampened with water glass cleaner, and then dry with a dry rag.

Do not use an electric screwdriver, and do not use too much force when installing, because the board is easy to break.

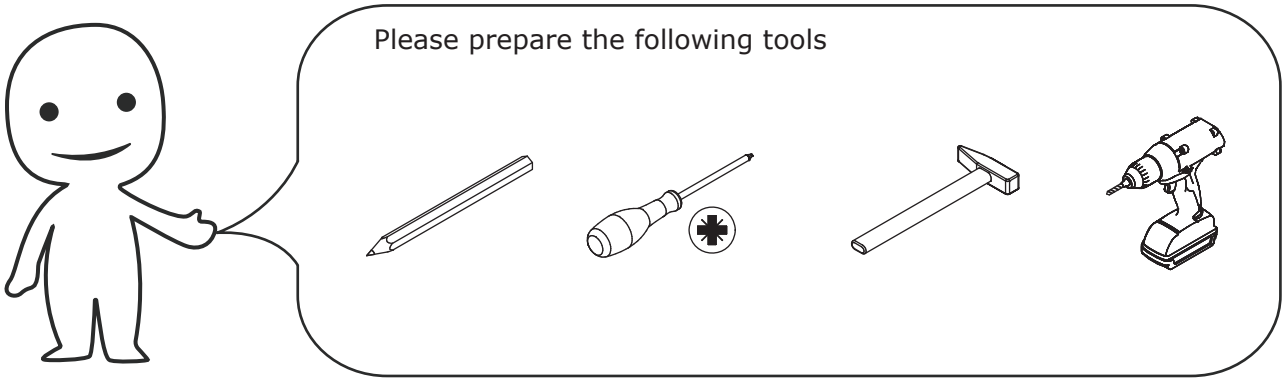

When installing, please carefully confirm whether each screw corresponds to the manual, accessories with similar shapes can be distinguished by size

A x 44 +4	B x 44 +4	C x 52 +4	D x 15
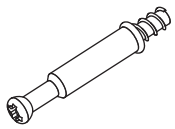 ∅6 x 35 mm	∅15 x 9.6 mm	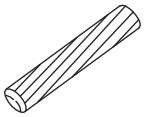 ∅6 x 30 mm	

E x 90 +4	F x 6	G x 12 +1	H x 14 +1
∅4 x 12 mm	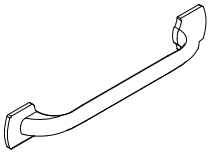	∅4 x 16 mm	∅4 x 35 mm

J x 2 +1	K x 2	L x 2	M x 2 +1
∅4 x 12 mm	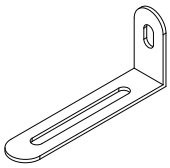	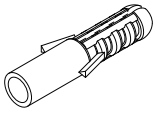	∅3 x 12 mm

N x 12 +1	P x 12	Q x 8
∅3 x 14 mm	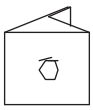	

① x1

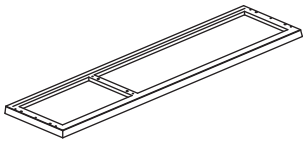

② x1

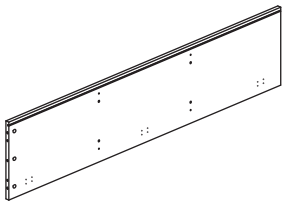

③ x1

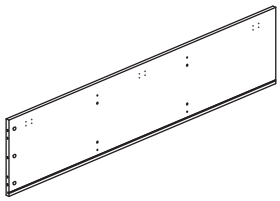

④ x1

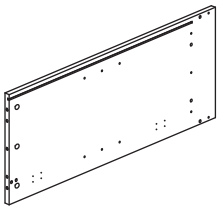

⑤ x1

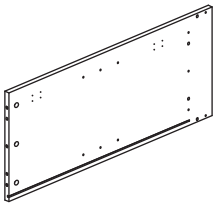

⑥ x2

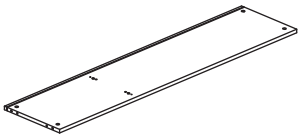

⑦ x1

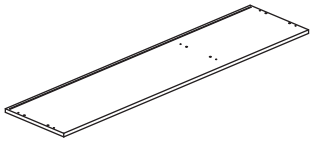

⑧ x1

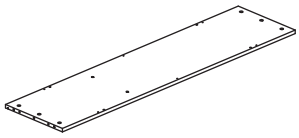

⑨ x1

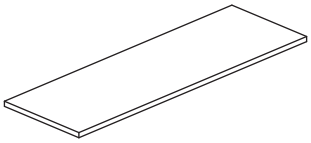

⑩ x1

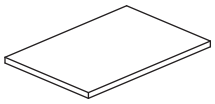

⑪ x1

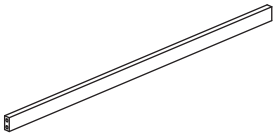

⑫ x2

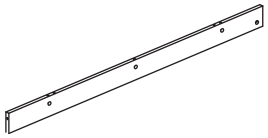

⑬ x1

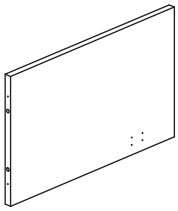

⑭ x1

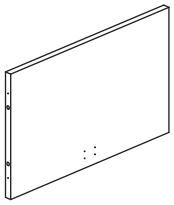

⑮ x1

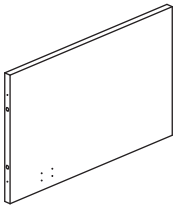

⑯ x1

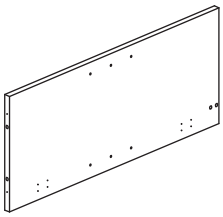

⑰ x3

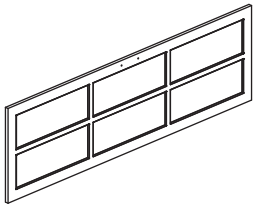

⑱ x3

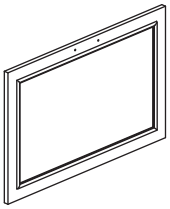

⑲ x3

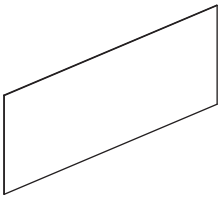

⑳ x2

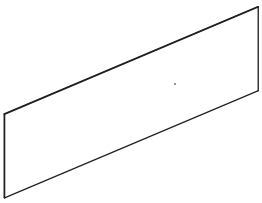

㉑ x1

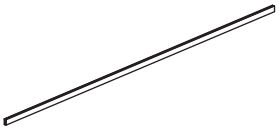

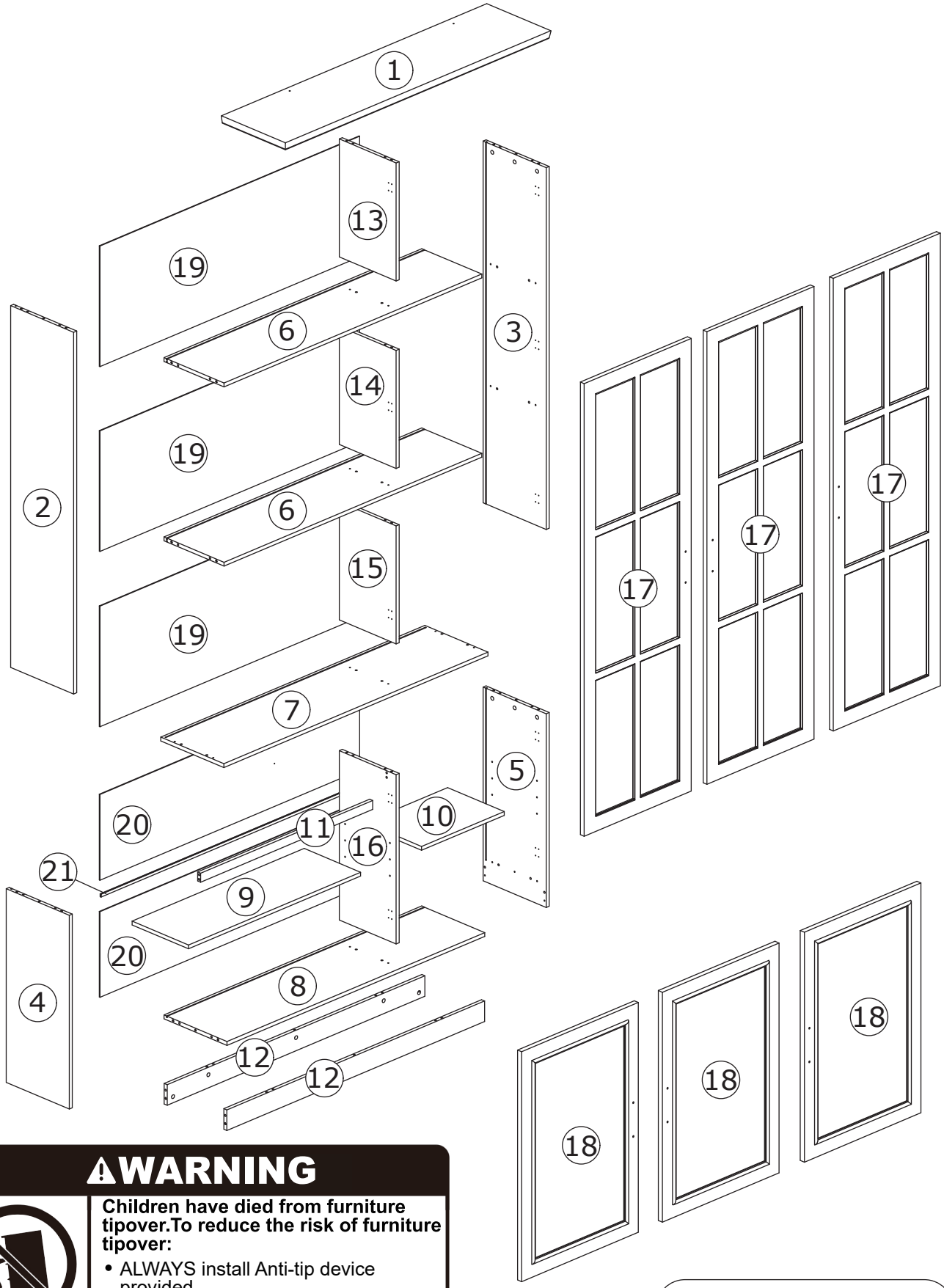

⚠WARNING

Children have died from furniture tipover.To reduce the risk of furniture tipover:

- ALWAYS install Anti-tip device provided.
- NEVER put a TV on this product.
- NEVER allow children to stand,climb or hang on drawers,doors,or shelves.
- NEVER open more than one drawer at a time.
- Place heaviest items in the lowest drawers.

This is a permanent label.
Do not remove!

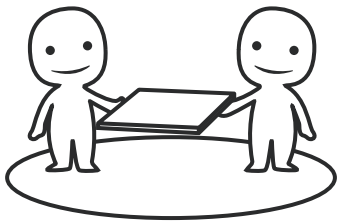

ASSEMBLED BY 2 ADULTS

1

A x 6	
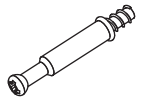 ∅6 x 35 mm	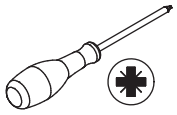

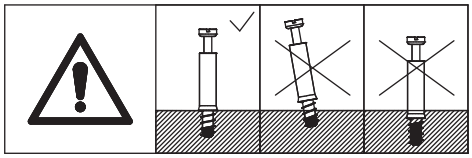

Insert quickfit screw(A) into corresponding holes in plate #8 with a screwdriver as shown.

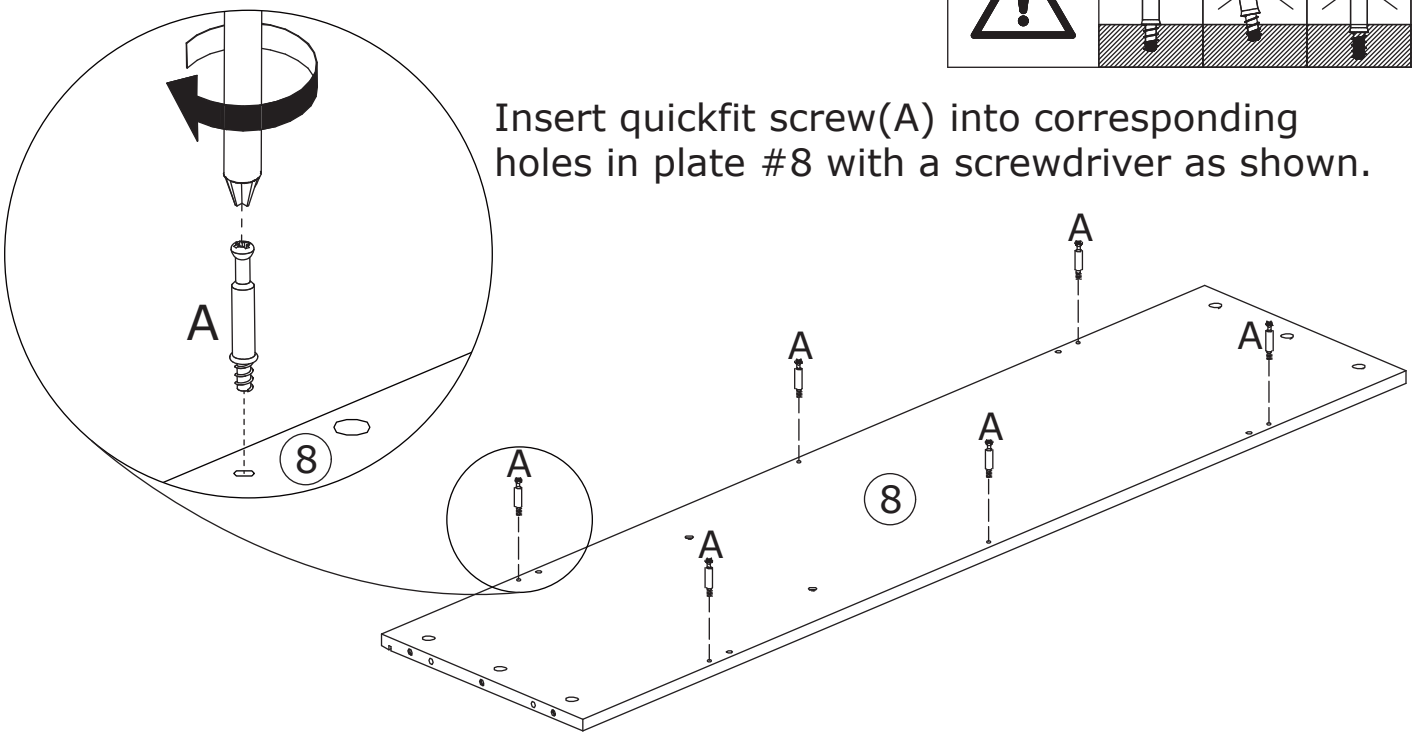

2

B x 6	C x 4	
∅15 x 9.6 mm	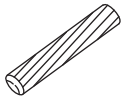 ∅6 x 30 mm	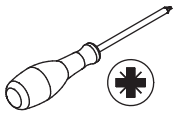

Connect two plate #12 with plate #8 using wooden dowel(C), put cam lock(B) into plate #12 and turn clockwise to tighten as shown.

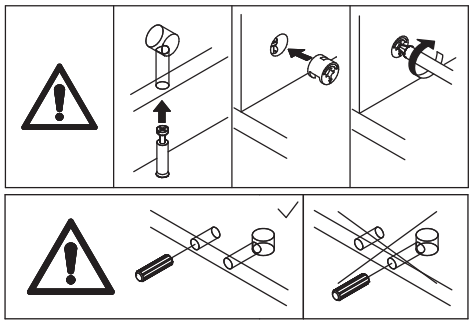

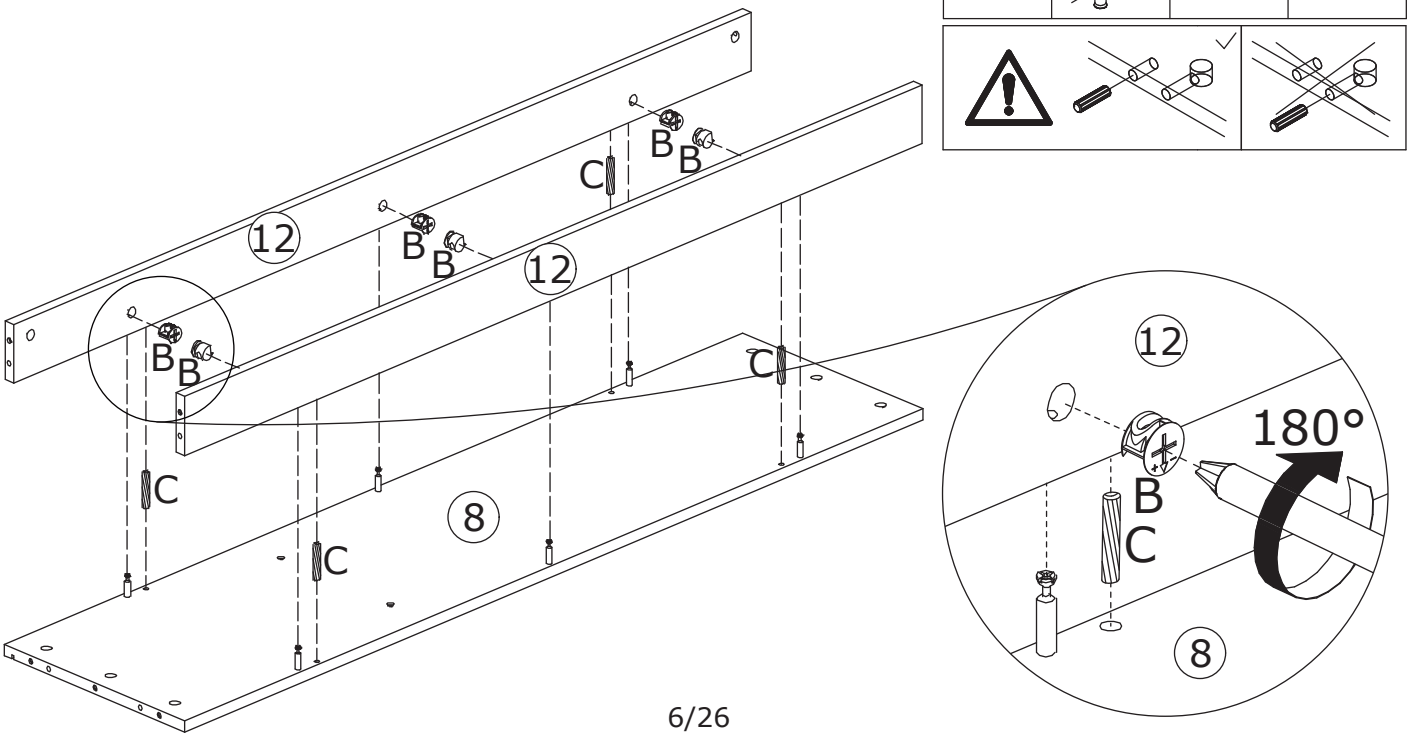

3

A x 10

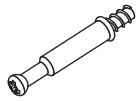

∅6 x 35 mm

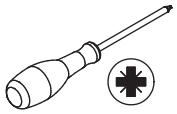

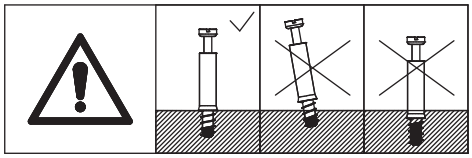

Insert quickfit screw(A) into corresponding holes in plate #4 and #5 with a screwdriver as shown.

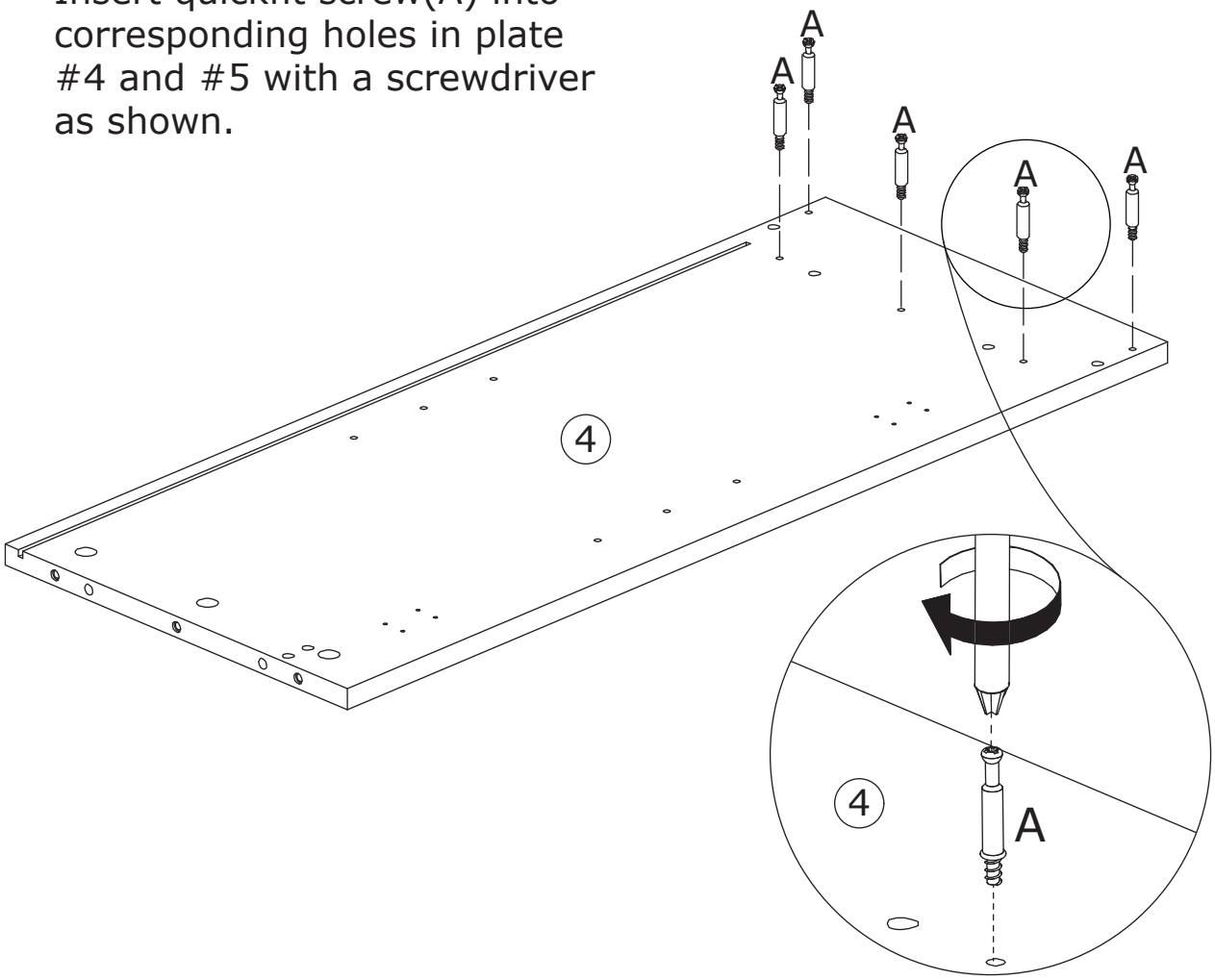

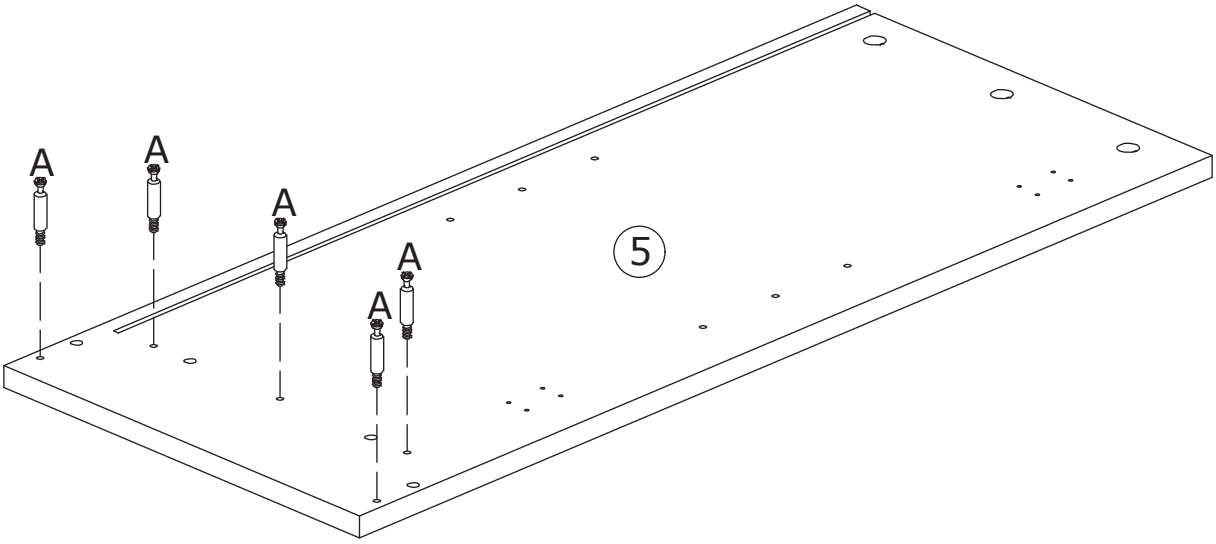

4

C x 2	H x 2
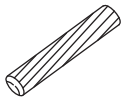	
∅6 x 30 mm	∅4 x 35 mm

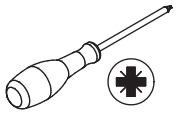

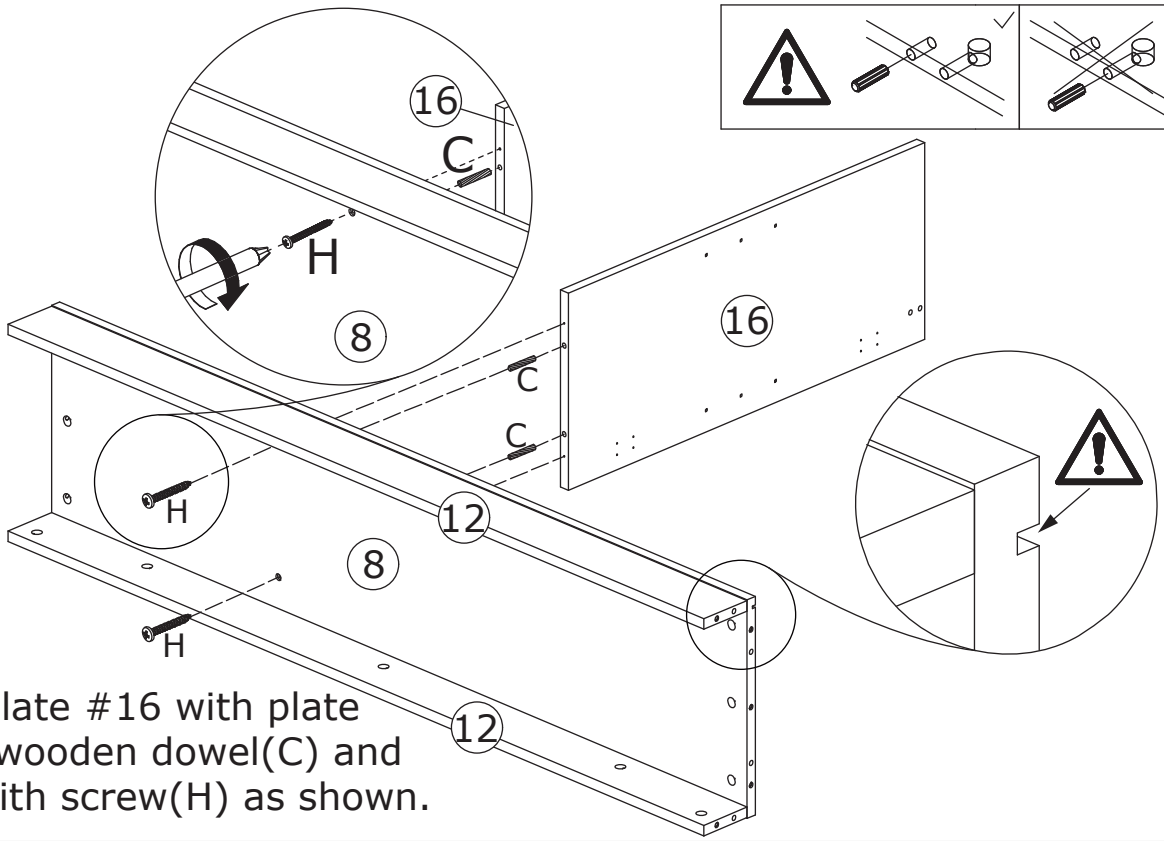

Connect plate #16 with plate #8 using wooden dowel(C) and then fix with screw(H) as shown.

5

B x 5	C x 4
	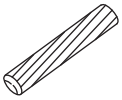
∅15 x 9.6 mm	∅6 x 30 mm

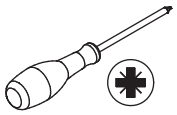

Connect the component(assembled in step 4) with plate #5 using wooden dowel(C) at first. Put cam lock(B) into plate #8 and #12, turn clockwise to tighten as shown.

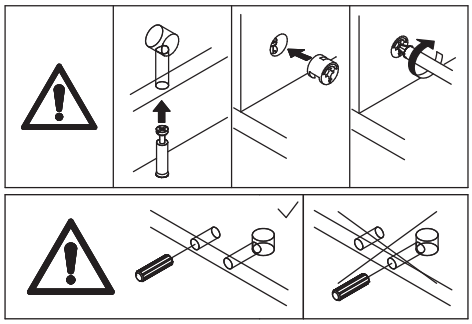

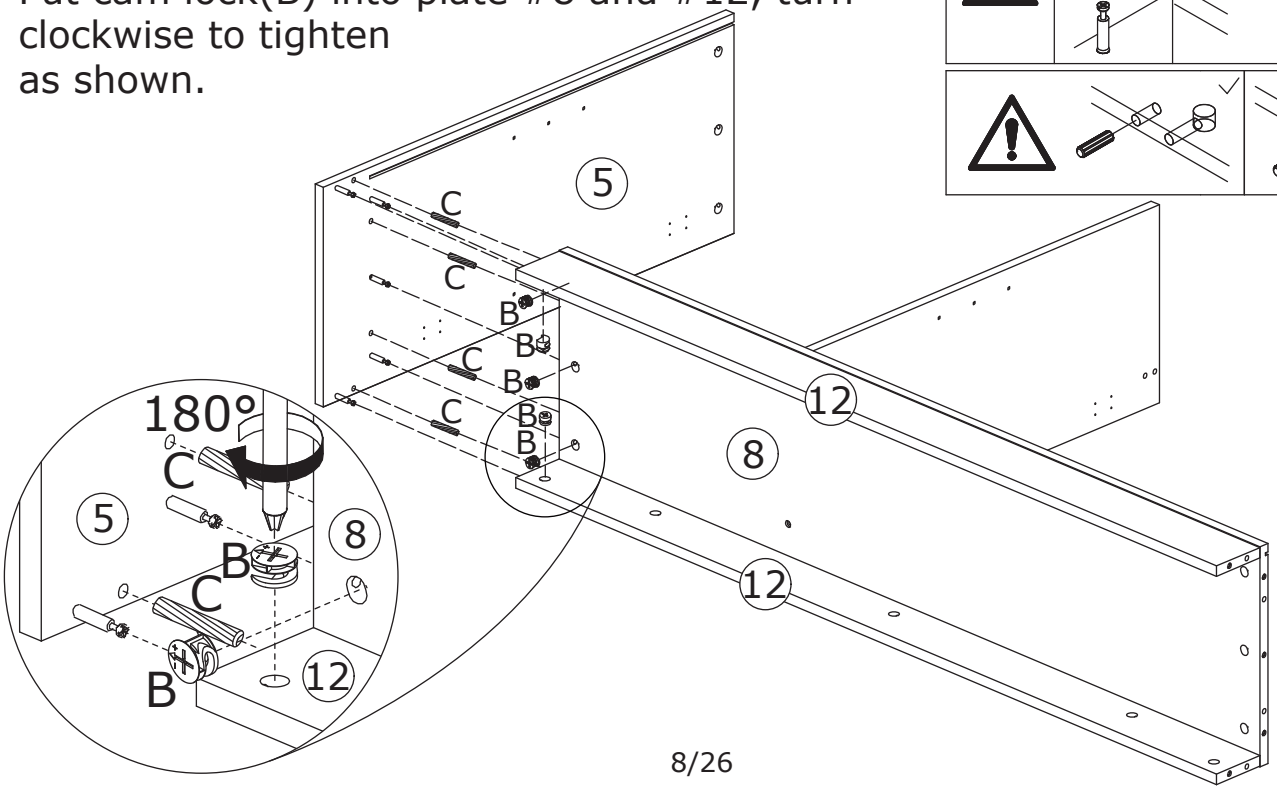

6

B x 5	C x 8
	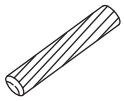
∅15 x 9.6 mm	∅6 x 30 mm

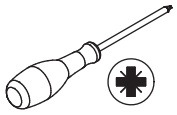

Connect plate #11 with plate #16 using wooden dowel(C) at first.
Connect plate #4 with the component using wooden dowel(C), put cam lock(B) into plate #8 and #12, turn clockwise to tighten as shown.

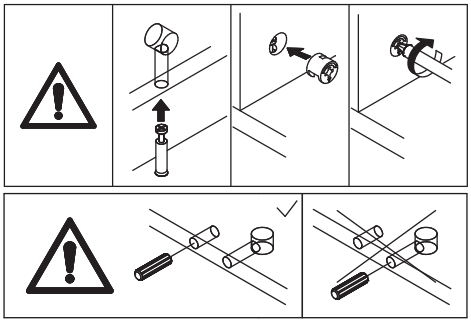

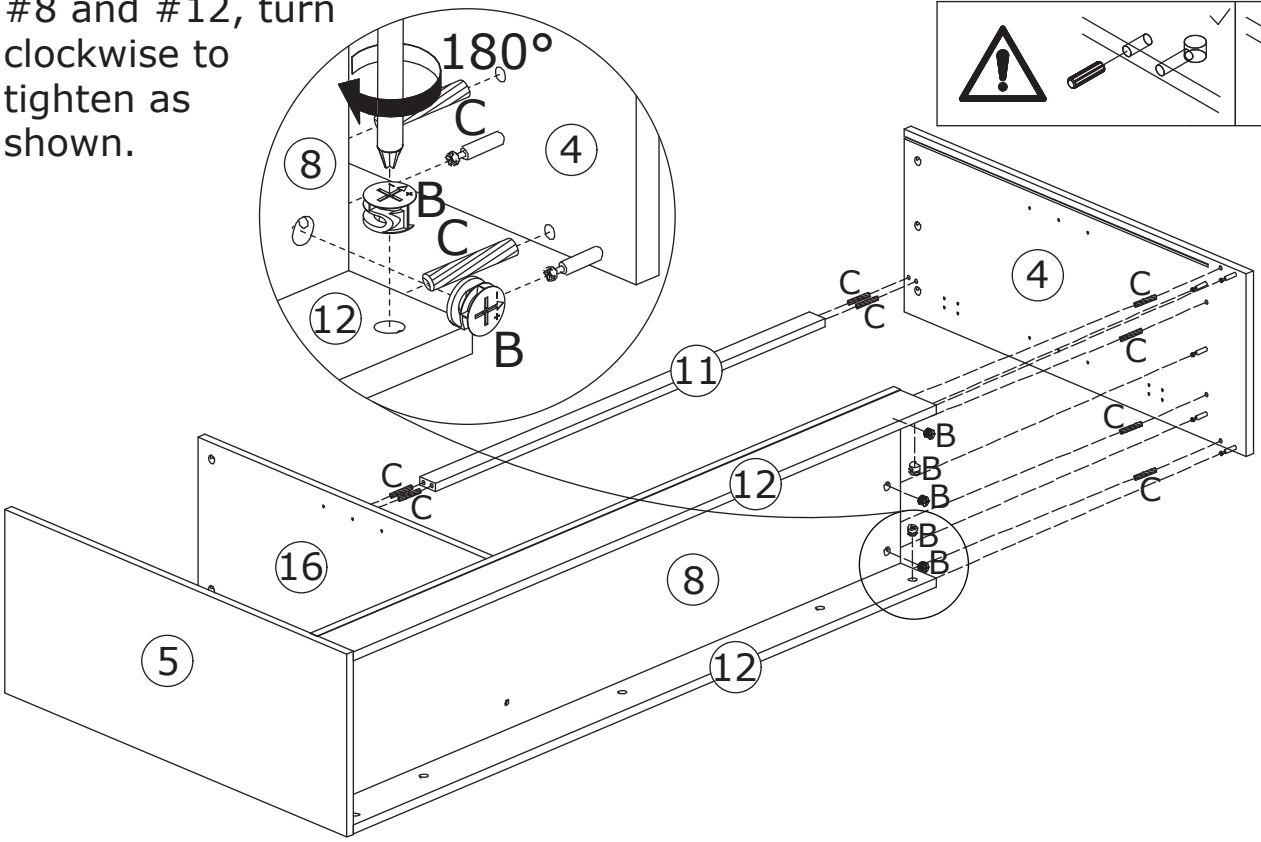

7

Connect two plate #20 with plank #21 at first.
Slide plate #20 into available grooves as shown.

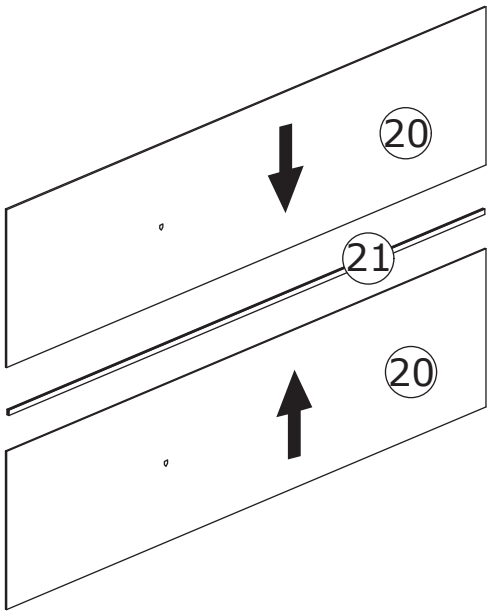

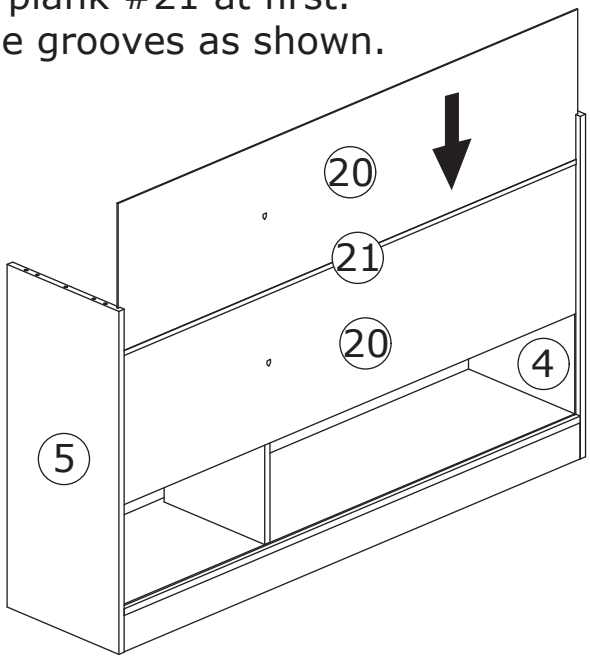

8

M x 2

∅3 x 12 mm

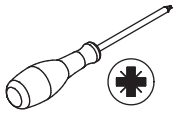

Fix back plate #20 with plate #16 using screw(M) as shown.

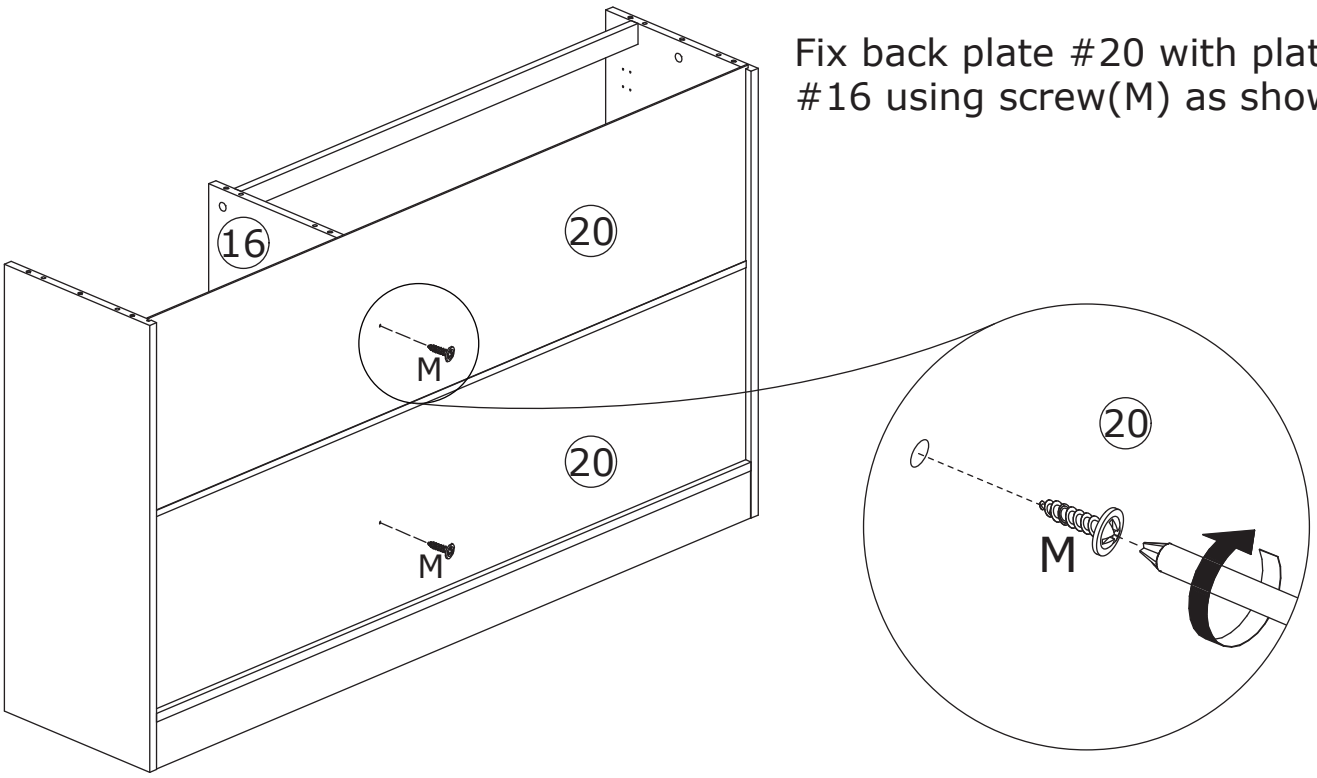

9

A x 4

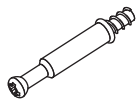

∅6 x 35 mm

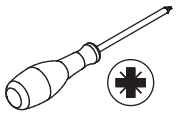

Insert quickfit screw(A) into corresponding holes in plate #6 as shown.

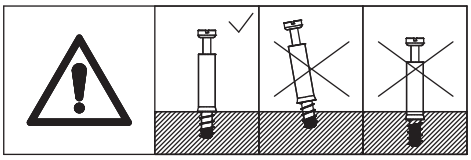

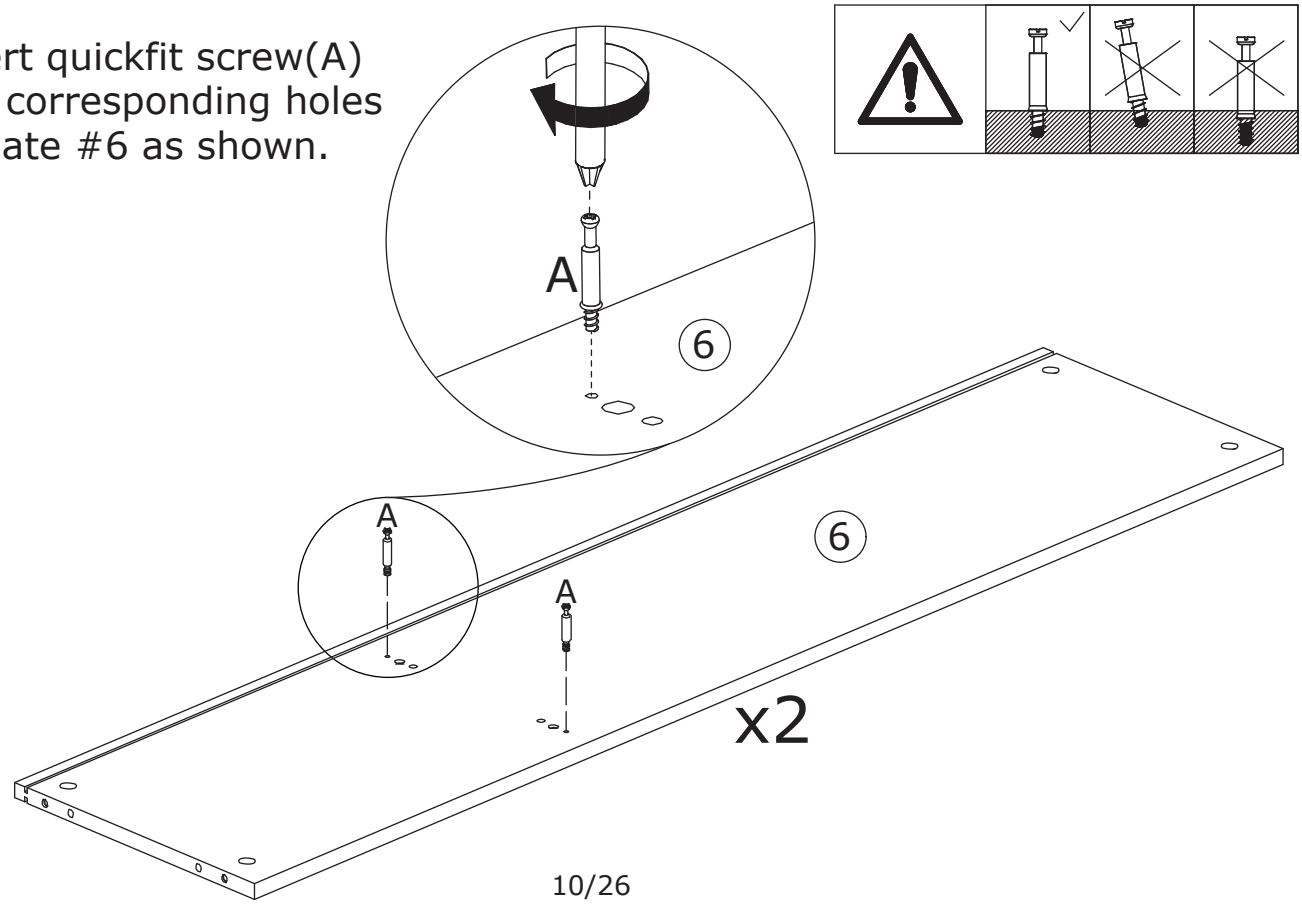

10

C x 2	H x 2
∅6 x 30 mm	∅4 x 35 mm

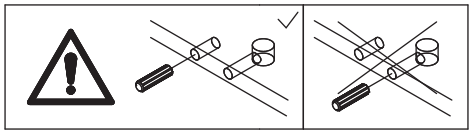

Connect plate #13 with plate #6 using wooden dowel(C) and then fix with screw(H) as shown.

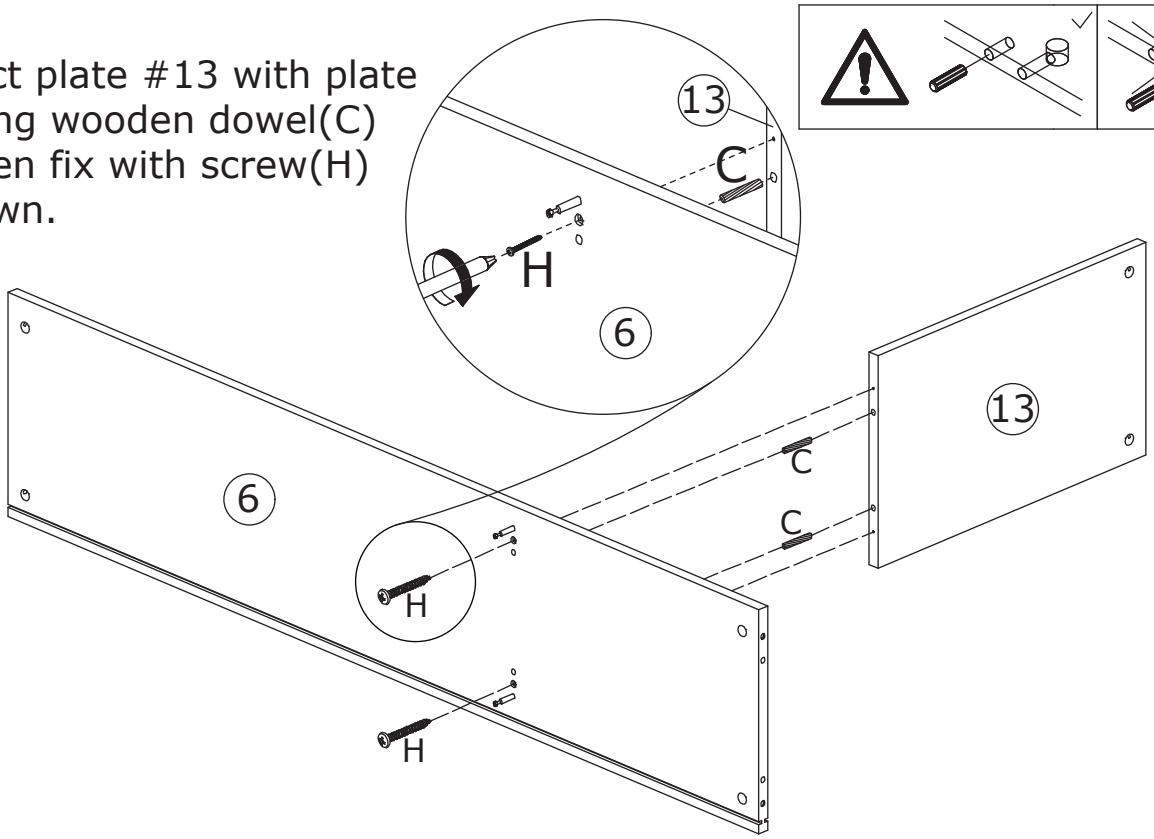

11

B x 2	C x 2
∅15 x 9.6 mm	∅6 x 30 mm

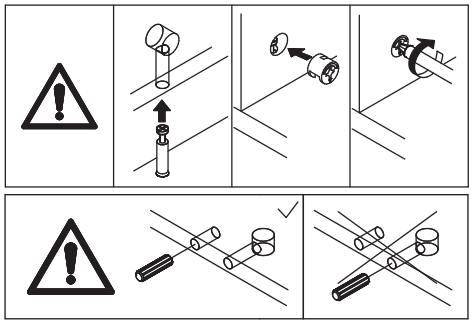

Connect plate #14 with plate #6 using wooden dowel(C), put cam lock(B) into plate #14, turn clockwise to tighten as shown.

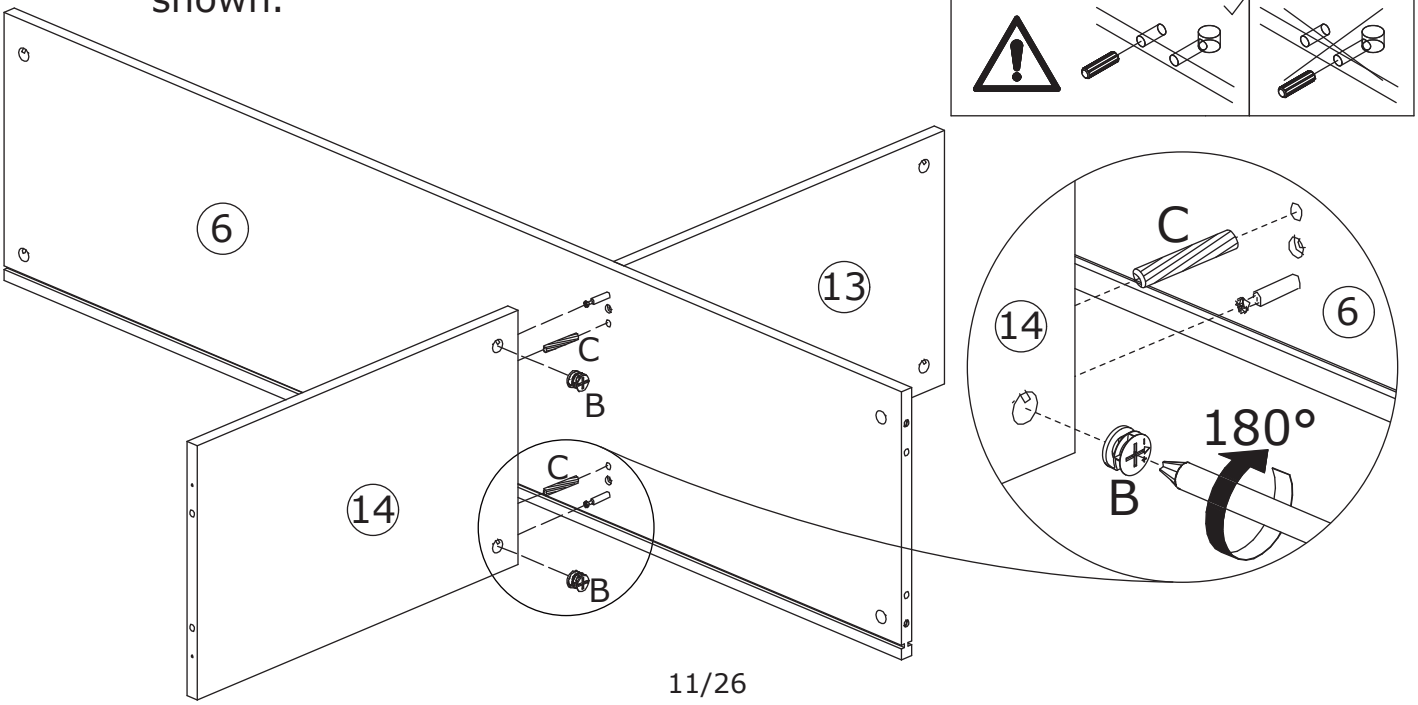

12

C x 2	H x 2	
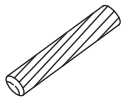		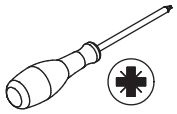
∅6 x 30 mm	∅4 x 35 mm	

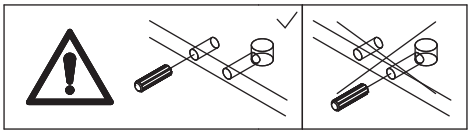

Connect another plate #6 with plate #14 using wooden dowel(C) and then fix with screw(H) as shown.

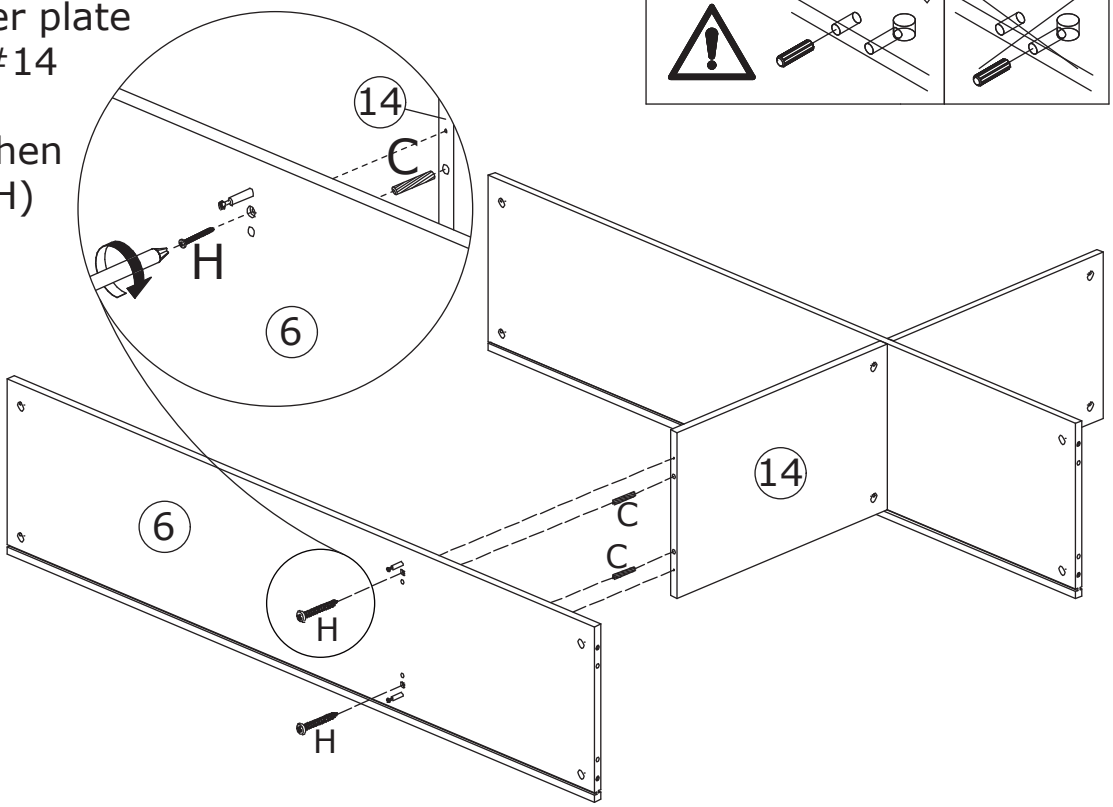

13

A x 4	
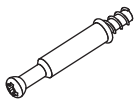	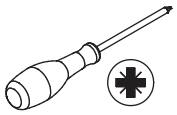
∅6 x 35 mm	

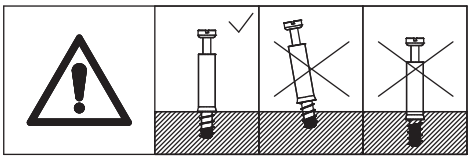

Insert quickfit screw(A) into corresponding holes in plate #2 as shown.

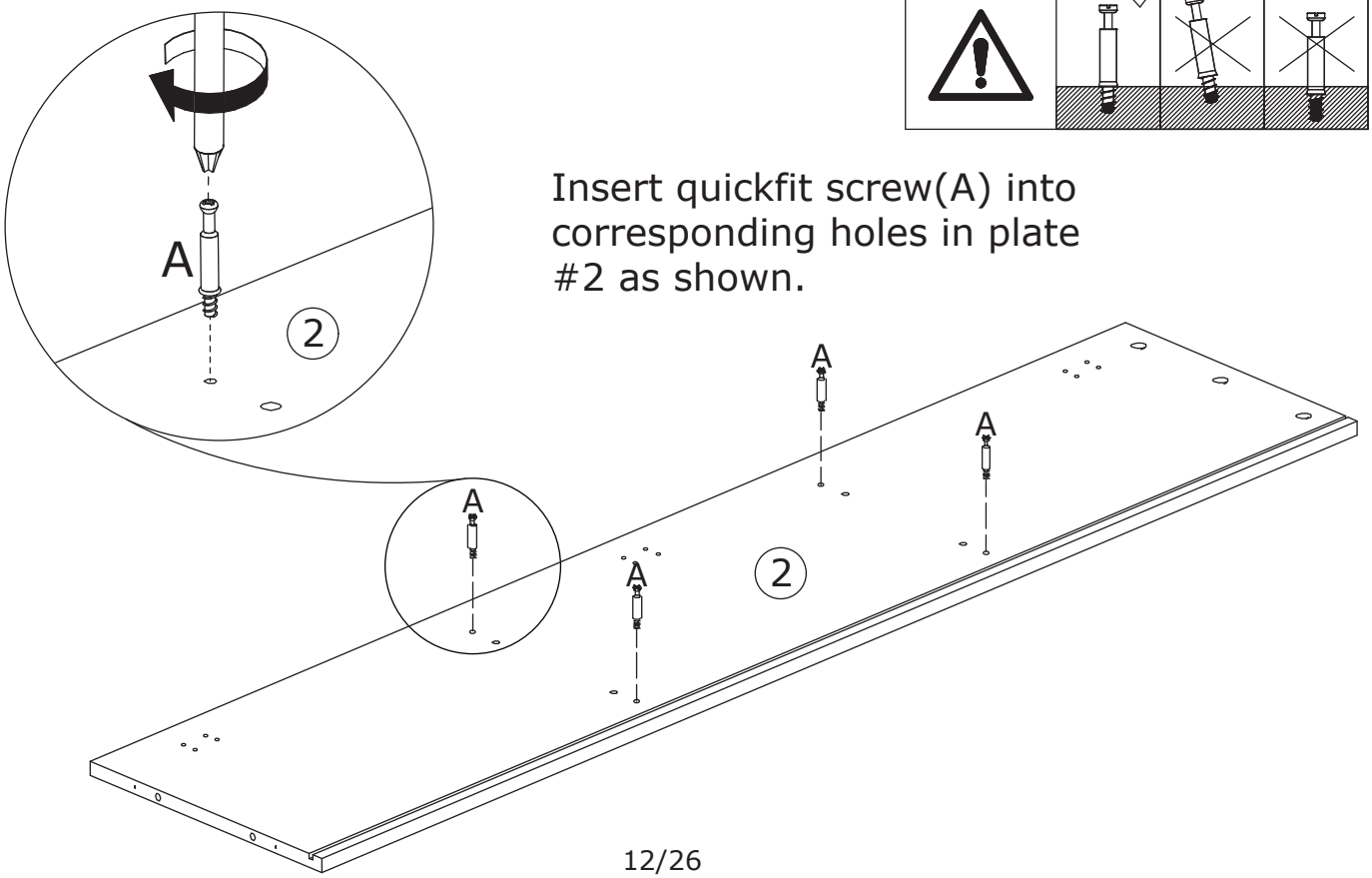

14

A x 4	
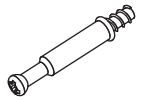 ∅6 x 35 mm	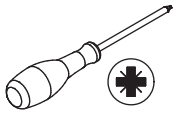

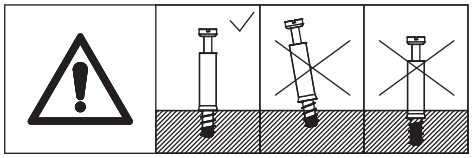

Insert quickfit screw(A) into corresponding holes in plate #3 as shown.

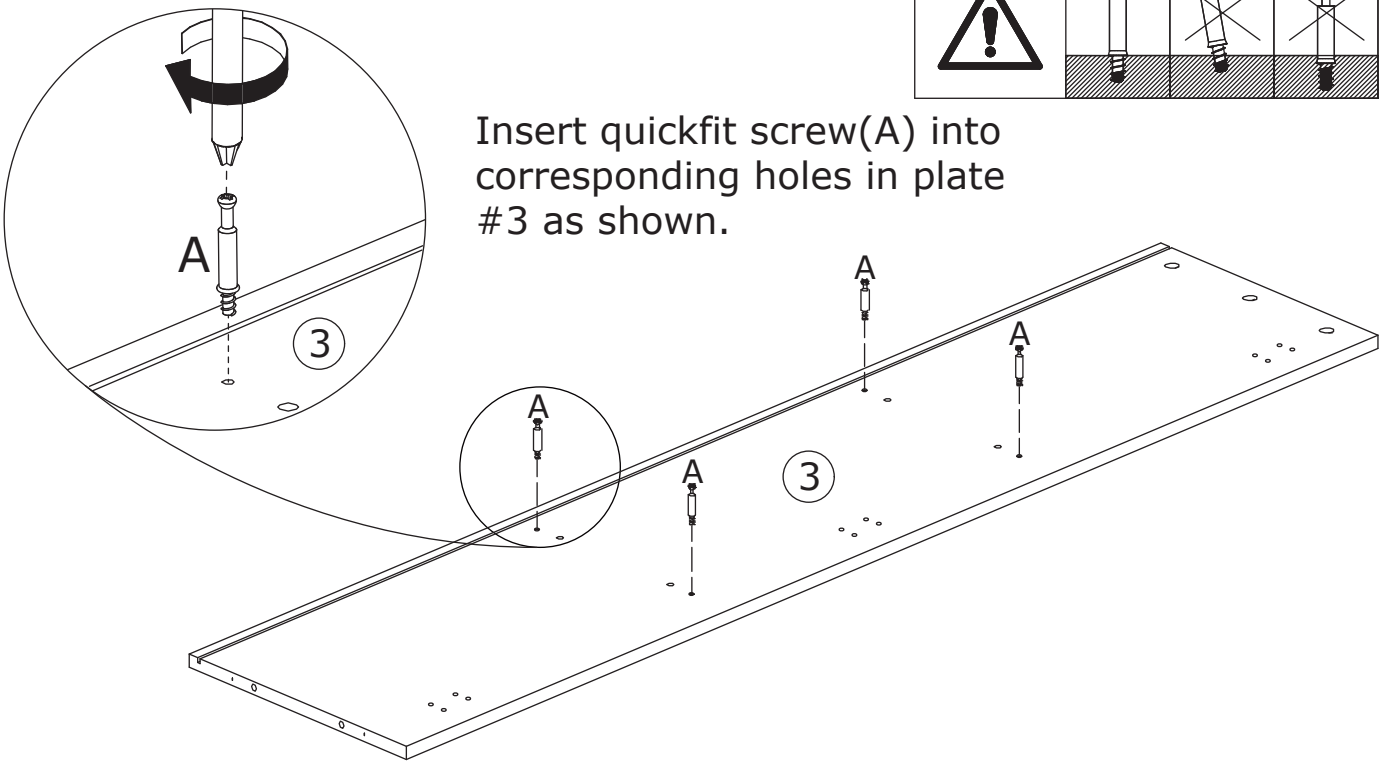

15

B x 4	C x 4	
∅15 x 9.6 mm	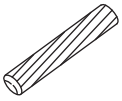 ∅6 x 30 mm	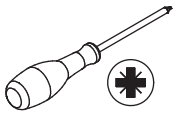

Attach plate #2 to two plate #6 with wooden dowel(C), put cam lock(B) into plate #6 and turn clockwise to tighten as shown.

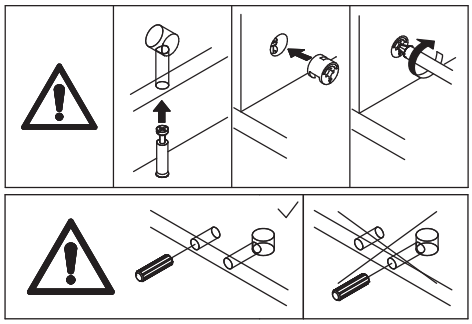

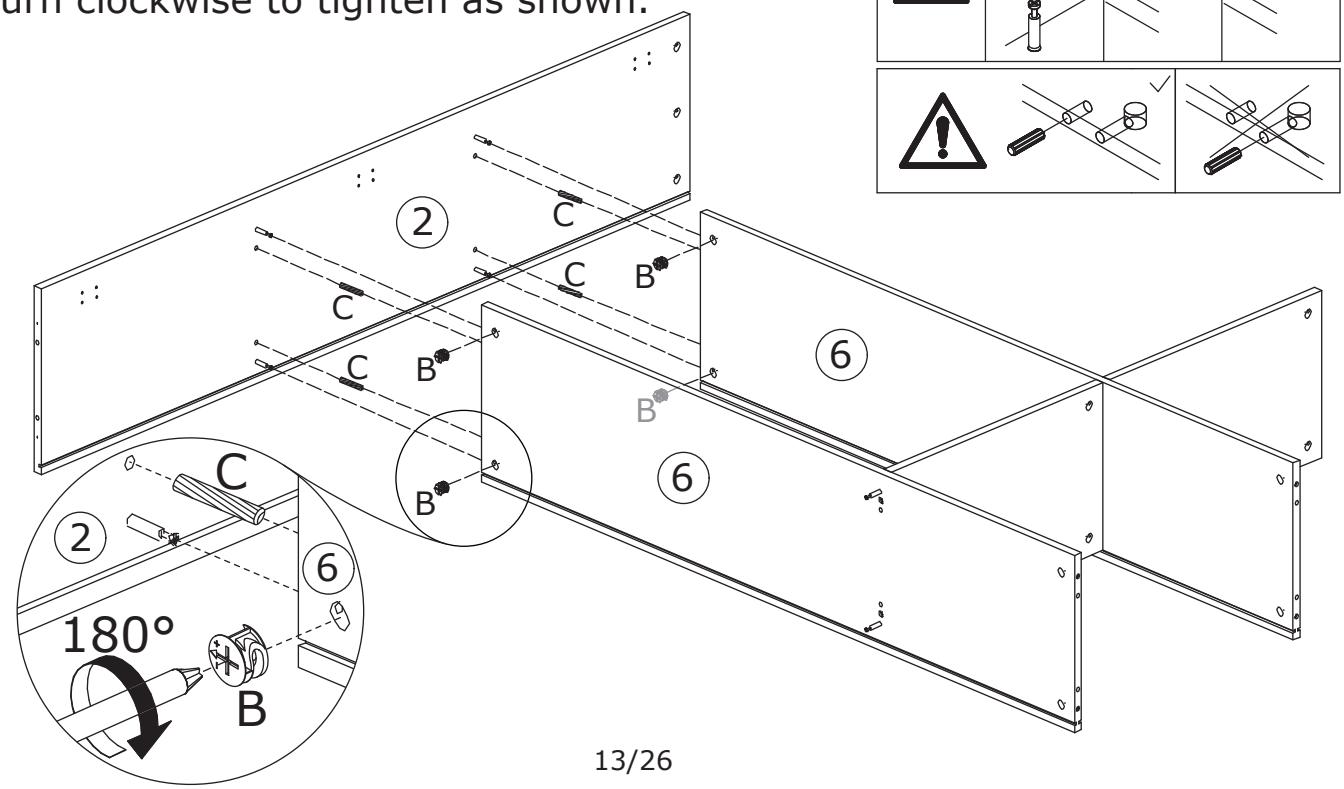

16

B x 4	C x 4	
	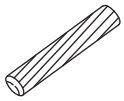	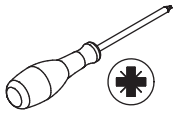
∅15 x 9.6 mm	∅6 x 30 mm	

Slide plate #19 into available grooves at first. Attach plate #3 to two plate #6 with wooden dowel(C), put cam lock(B) into plate #6 and turn clockwise to tighten as shown.

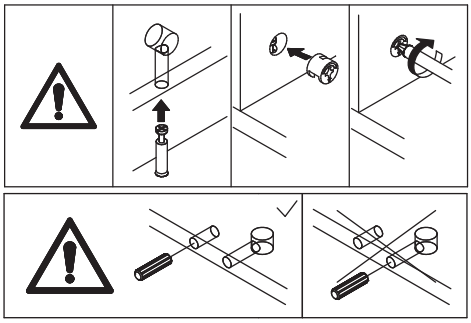

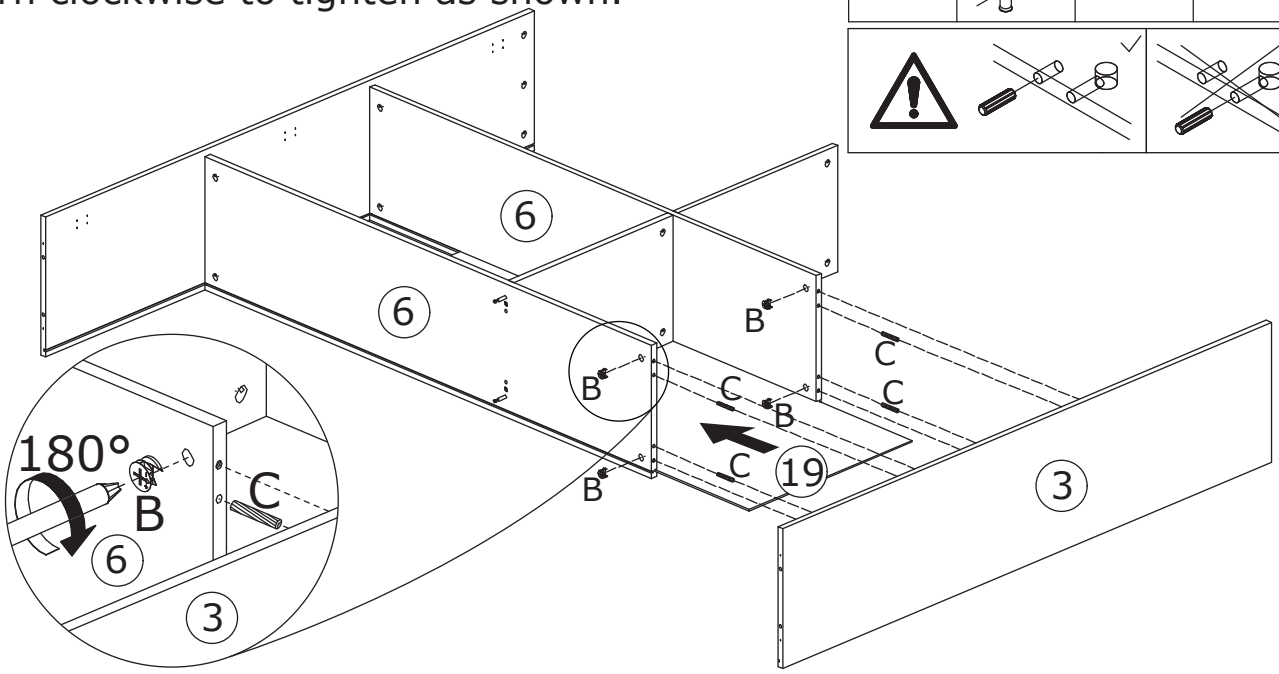

17

A x 8	
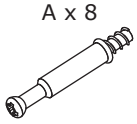	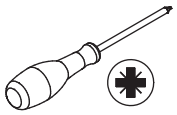
∅6 x 35 mm	

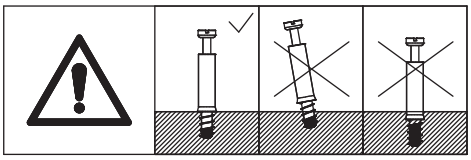

Insert quickfit screw(A) into corresponding holes in plate #1 as shown.

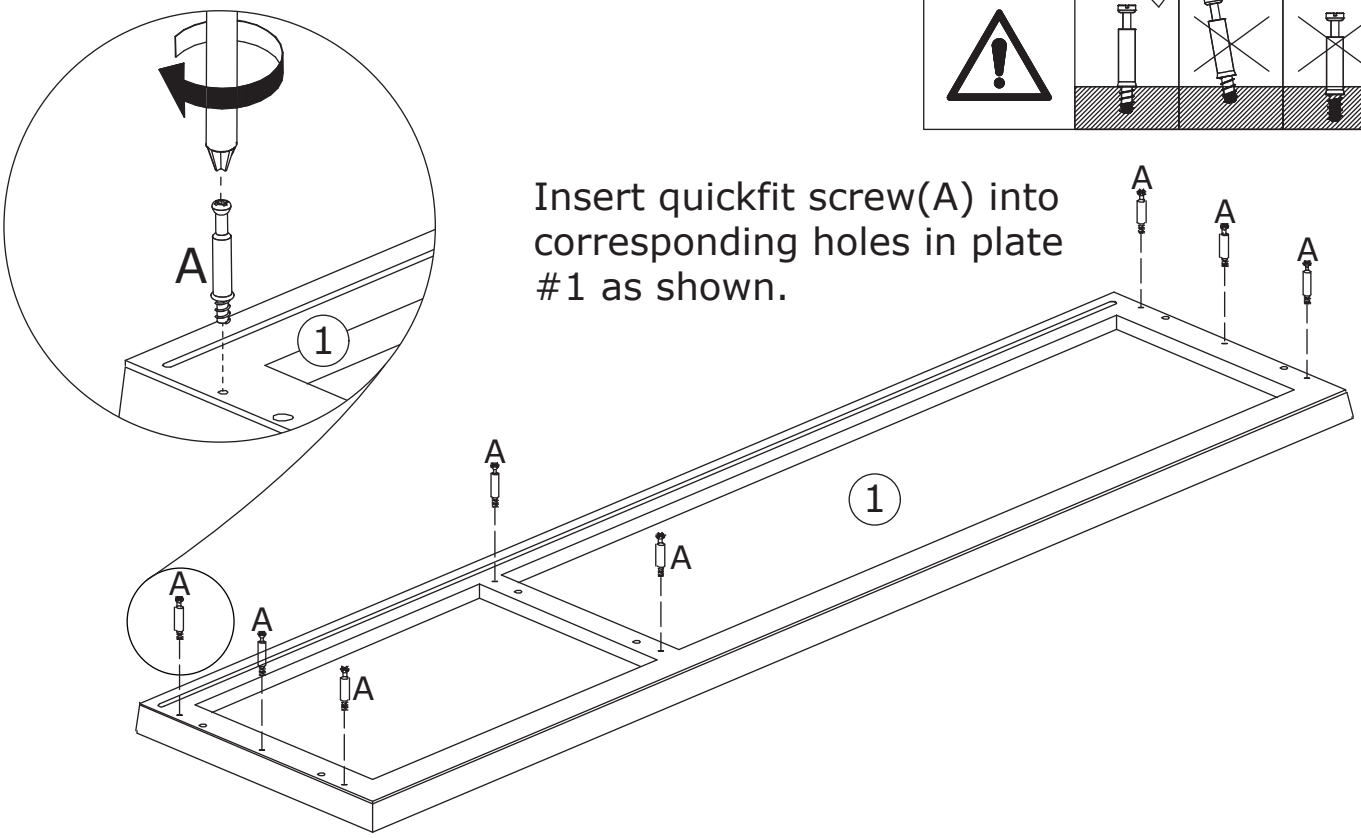

18

B x 8	C x 6	
	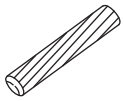	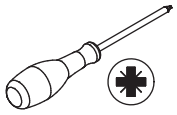
∅15 x 9.6 mm	∅6 x 30 mm	

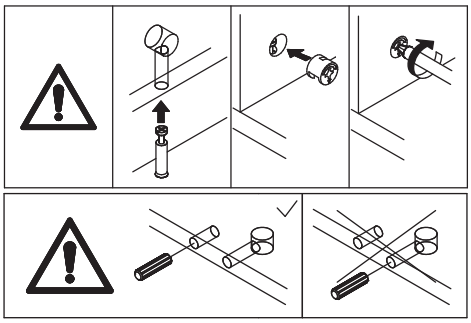

Slide plate #19 into available grooves at first. Cover plate #1 to the top of the component with wooden dowel(C), put cam lock(B) into plate #2,#13,#3, and turn clockwise to tighten as shown.

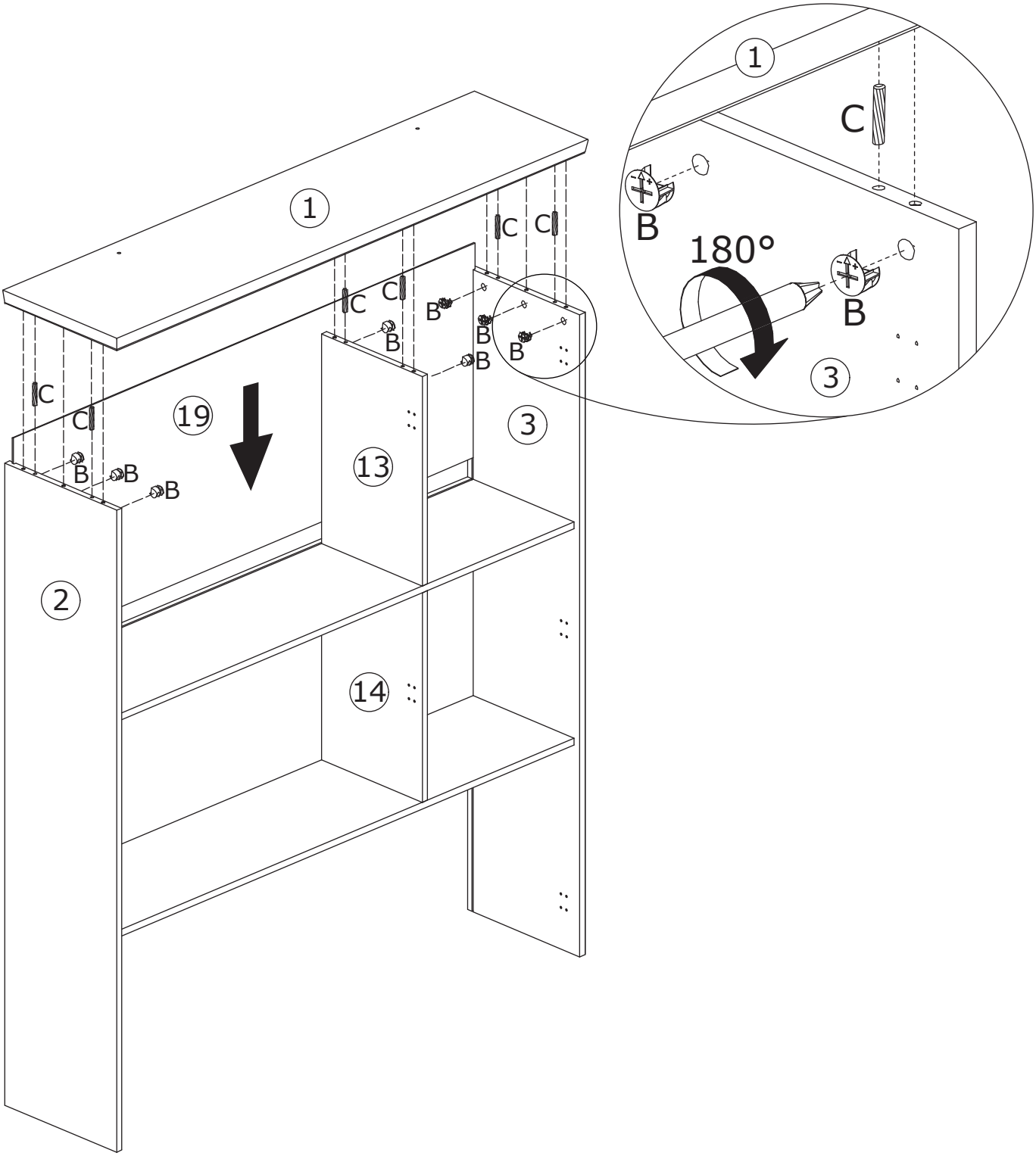

19

B x 2	C x 2
	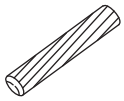
∅15 x 9.6 mm	∅6 x 30 mm

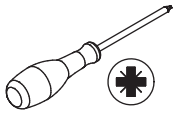

Attach plate #15 to plate #6 with wooden dowel(C), put cam lock(B) into plate #15 and turn clockwise to tighten as shown.

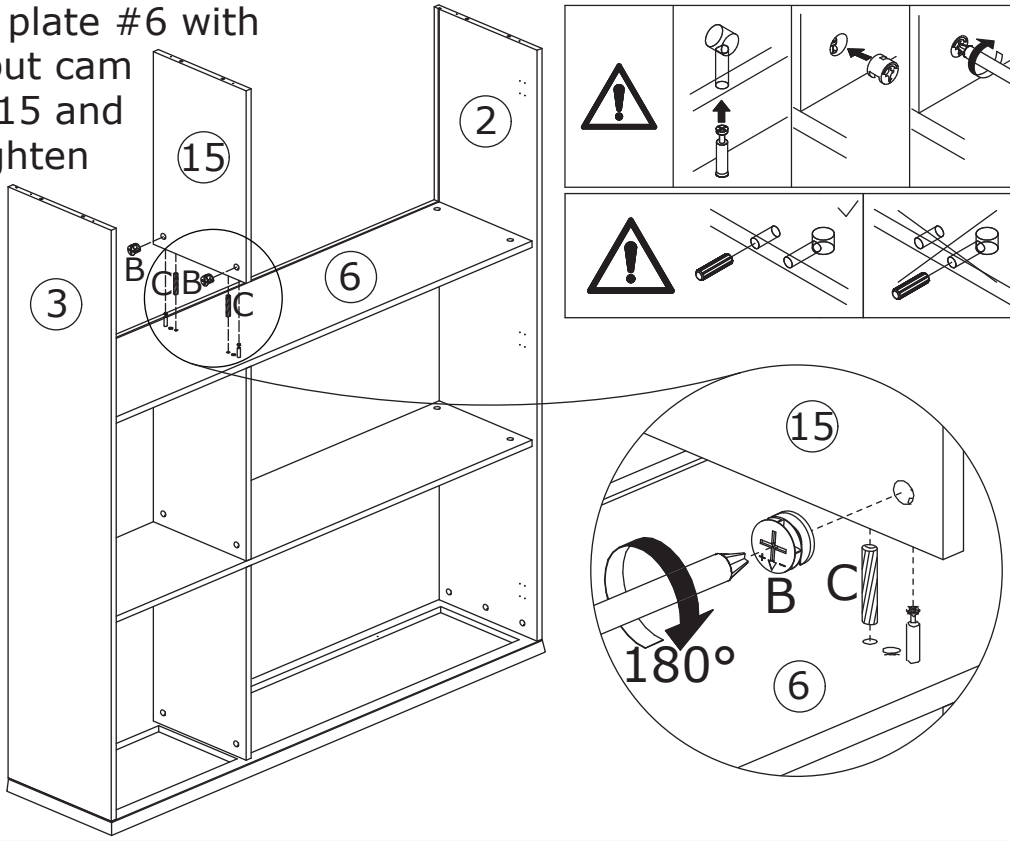

20

A x 8
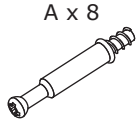
∅6 x 35 mm

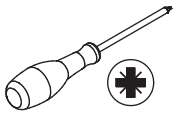

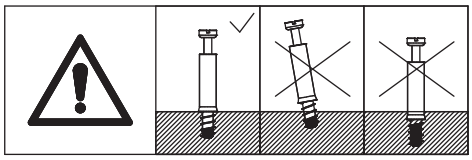

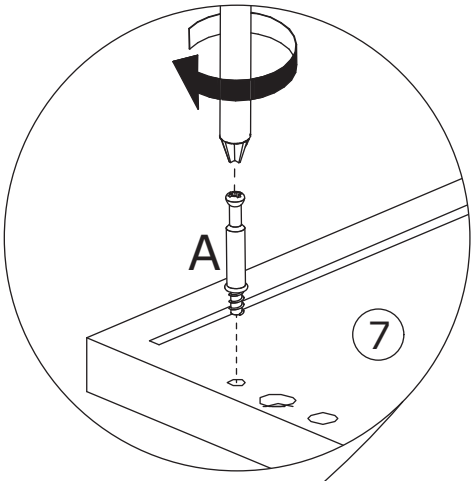

Insert quickfit screw(A) into corresponding holes in plate #7 as shown.

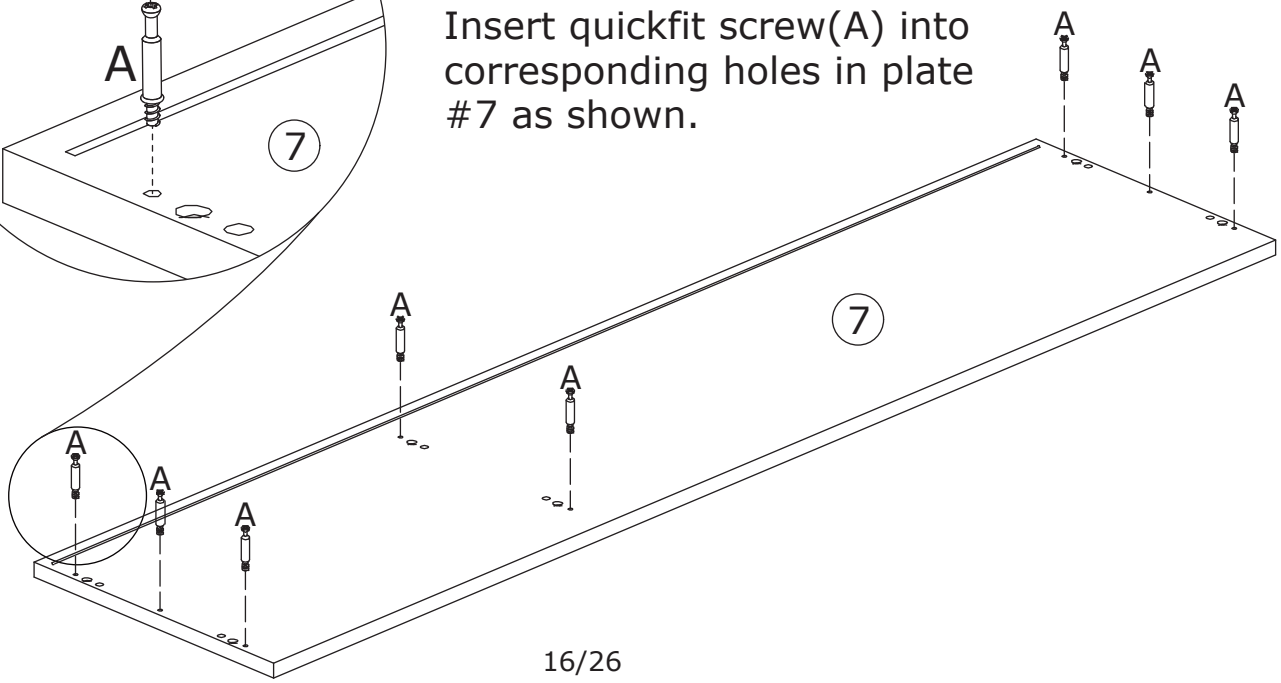

21

C x 6	H x 6	
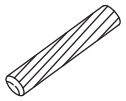		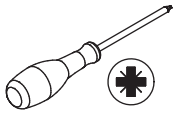
∅6 x 30 mm	∅4 x 35 mm	

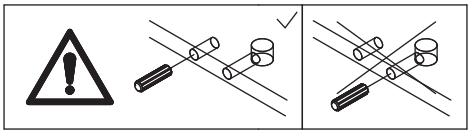

Slide plate #19 into available grooves at first. Cover plate #7 to the bottom of the component with wooden dowel(C), and fix using screw(H) as shown.

22

J x 2	K x 2	
∅4 x 12 mm	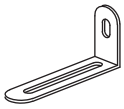	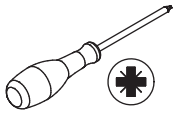

Fix part(K) to plate #1 with screw(J) as shown.

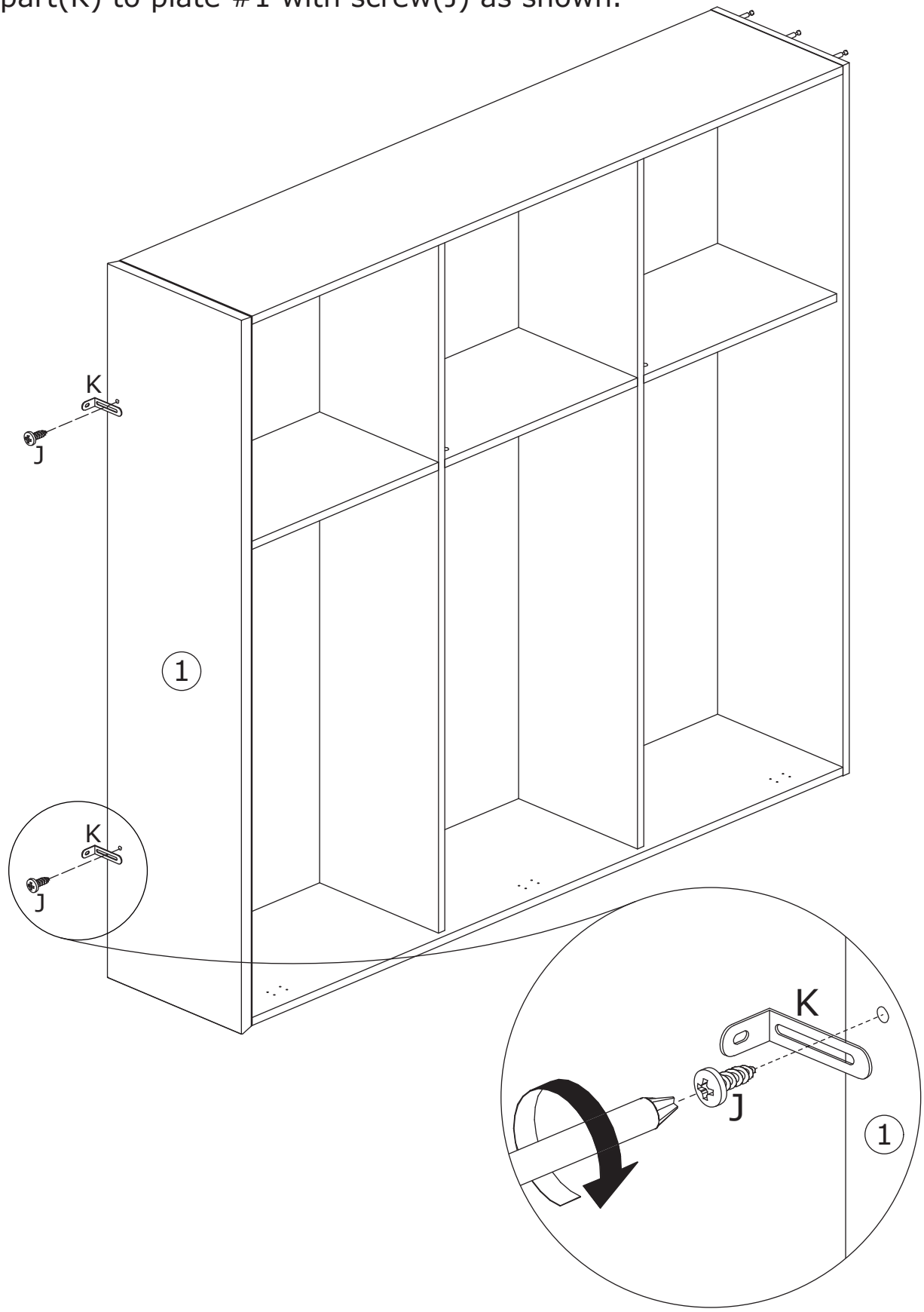

23

B x 8	C x 6	
	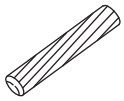	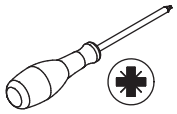
∅15 x 9.6 mm	∅6 x 30 mm	

Connect the two components(assembled in step 8 and 22) with wooden dowel(C), put cam lock(B) into plate #4,#16,#5, and turn clockwise to tighten as shown. Requires more than two people to assemble.

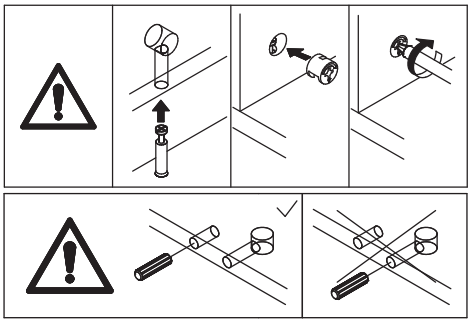

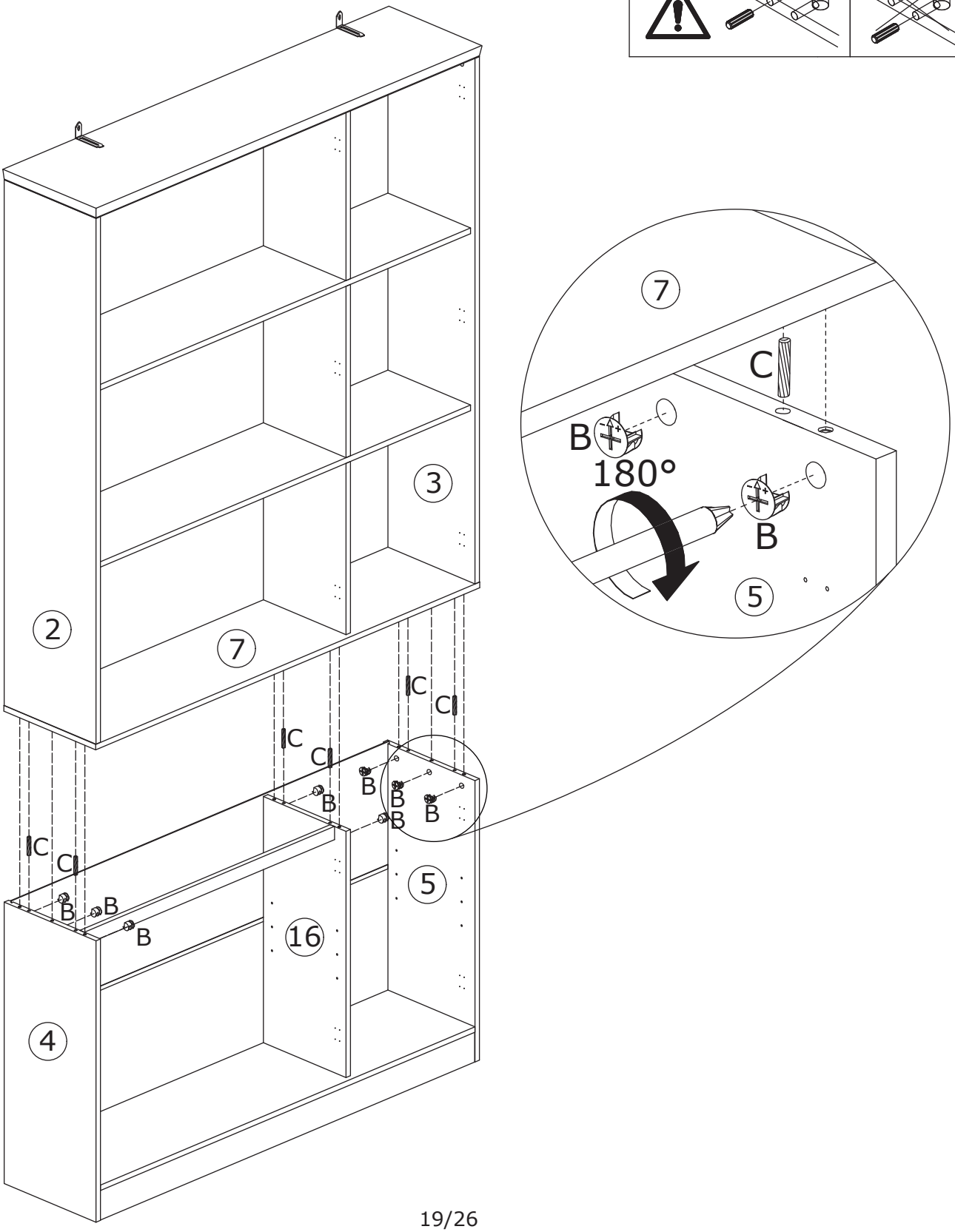

24

N x 12	P x 12	
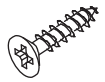 ∅3 x 14 mm		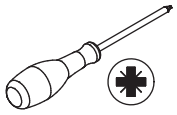

Reinforce back plate using
part(P) with screw(N) as shown.

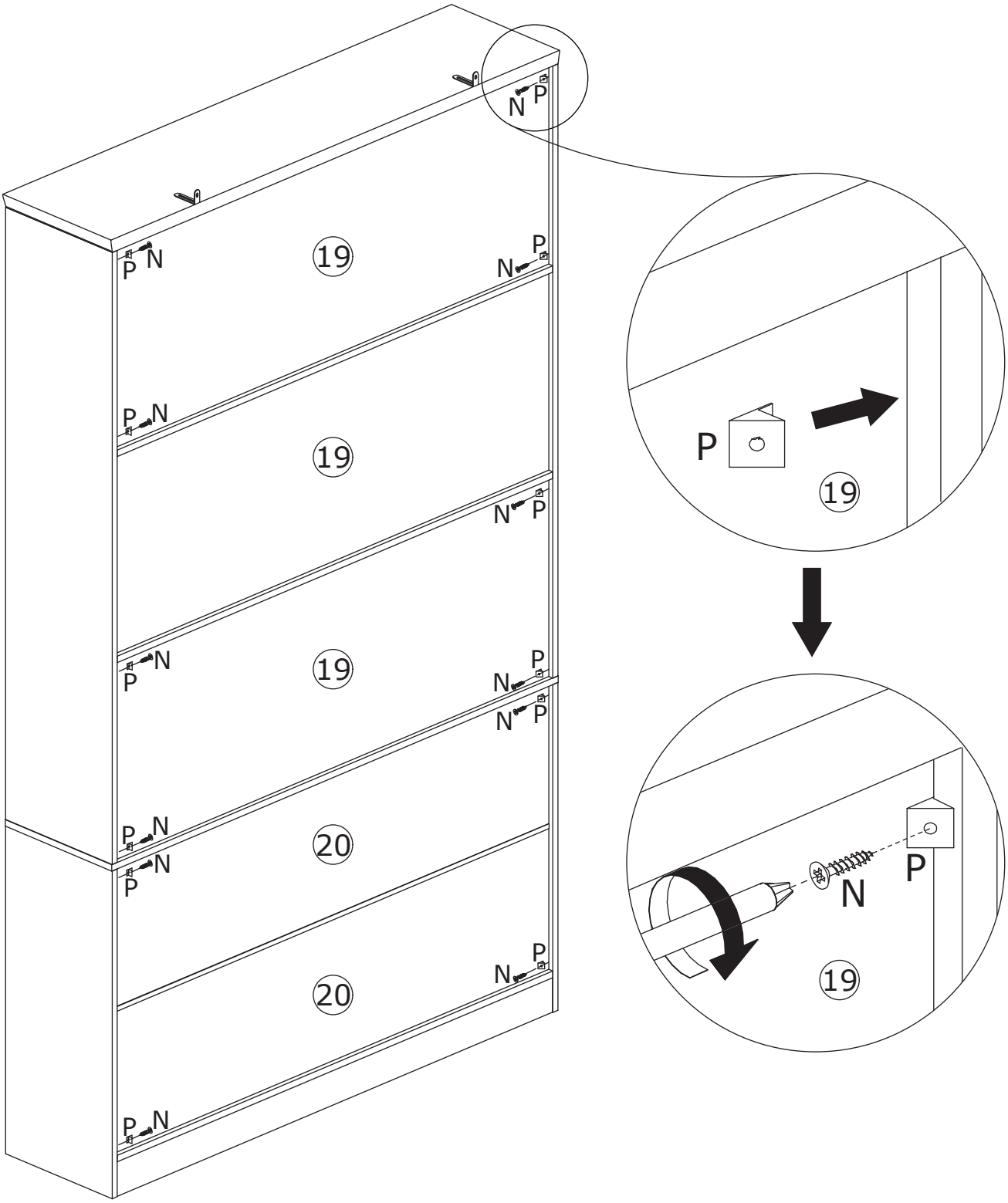

25

Q x 8

Insert part(Q) into corresponding holes in plate #4,#16 and #5, then place plate #9 and #10 in as shown.

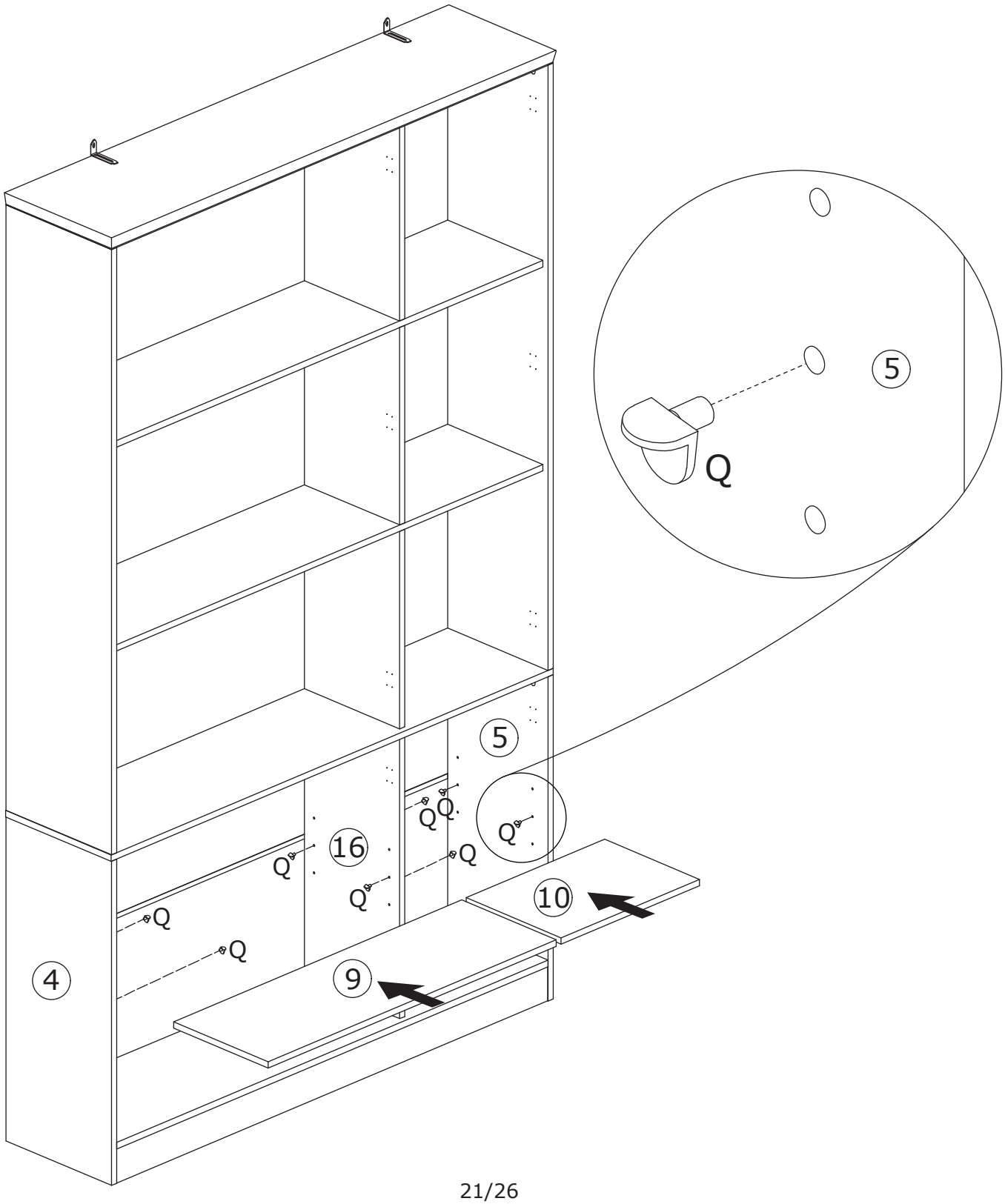

26

D x 15	E x 30	F x 6	G x 12	
	∅4 x 12 mm	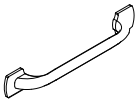	∅4 x 16 mm	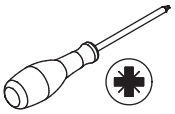

Fix hinge(D) to plate #17 and #18 using screw(E) as shown.
Fix handle(F) to plate #17 and #18 using screw(G) as shown.

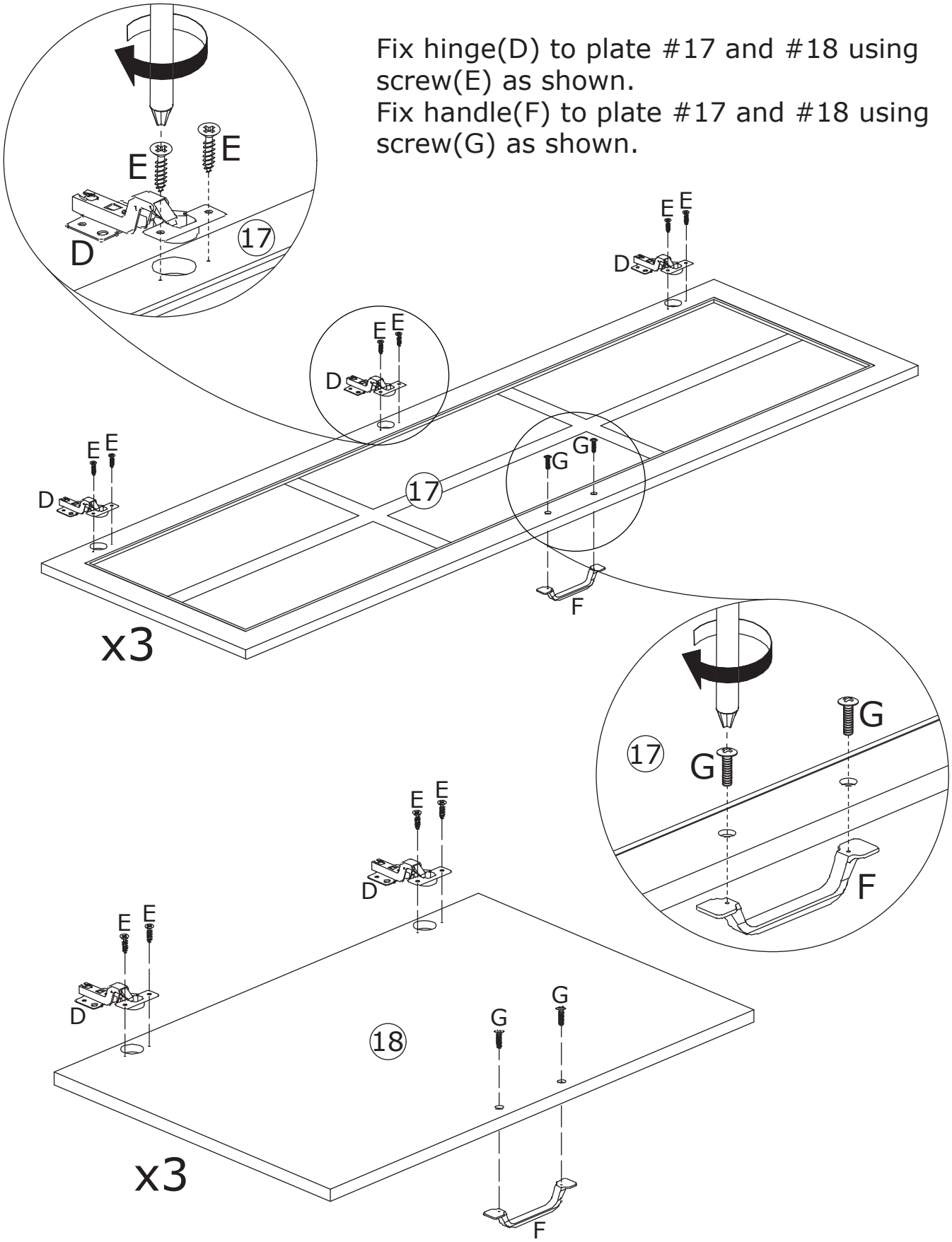

27

E x 24

∅4 x 12 mm

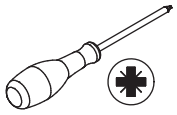

Fix door plate #18 to lower cabinet by fixing hinge with screw(E) as shown.

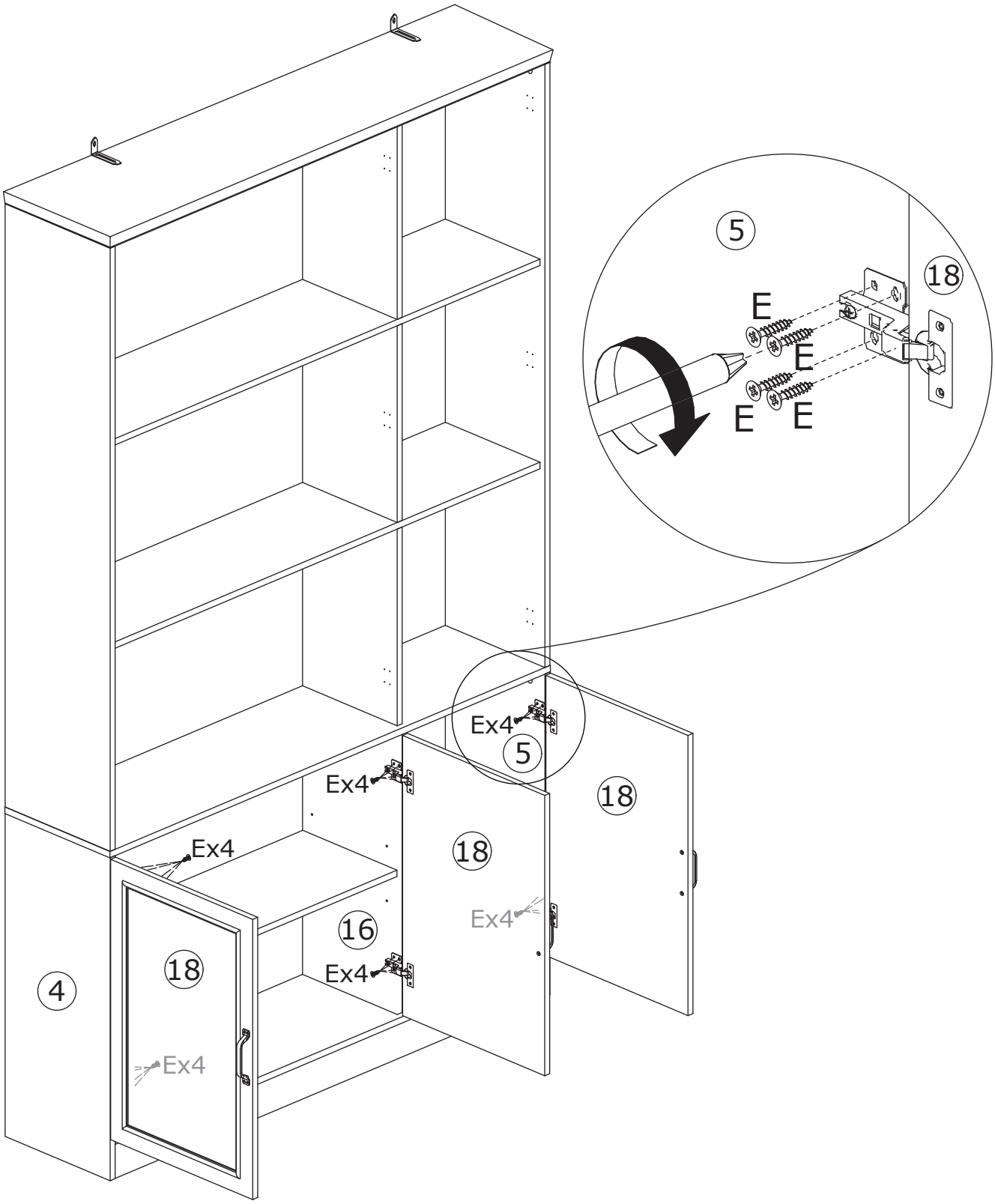

28

E x 36

∅4 x 12 mm

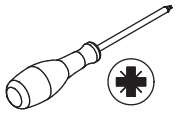

Fix door plate #17 to upper cabinet by fixing hinge with screw(E) as shown.

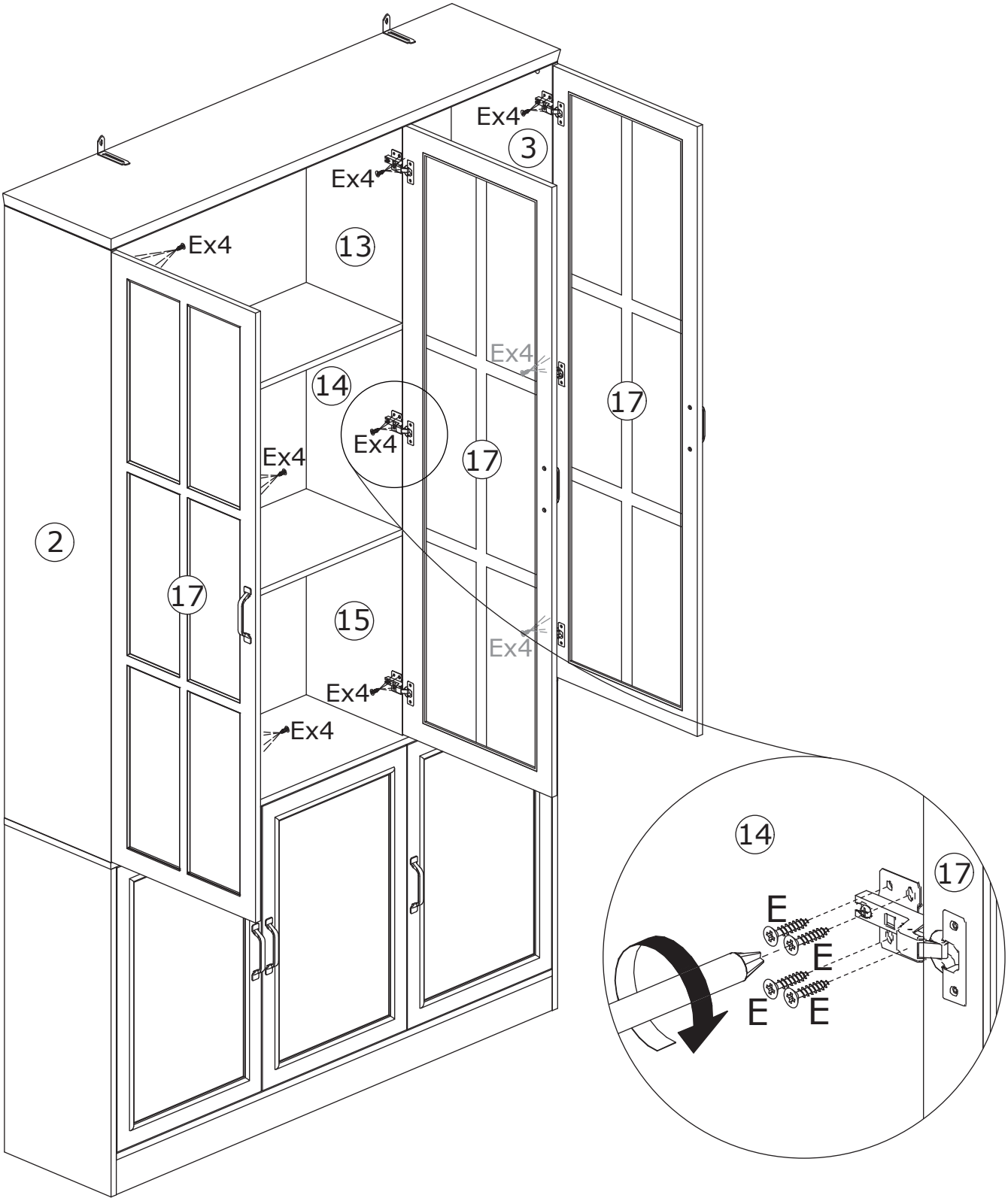

29

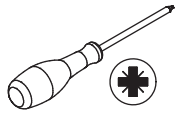

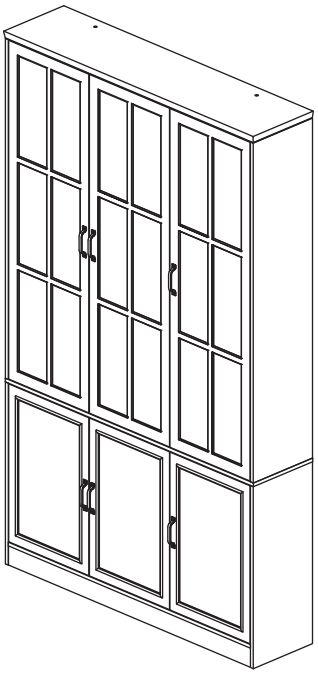

If doors are still not aligned if the hinges are properly correctly, please watch the video.

If there is misalignment after you install, adjust the screw to the best condition

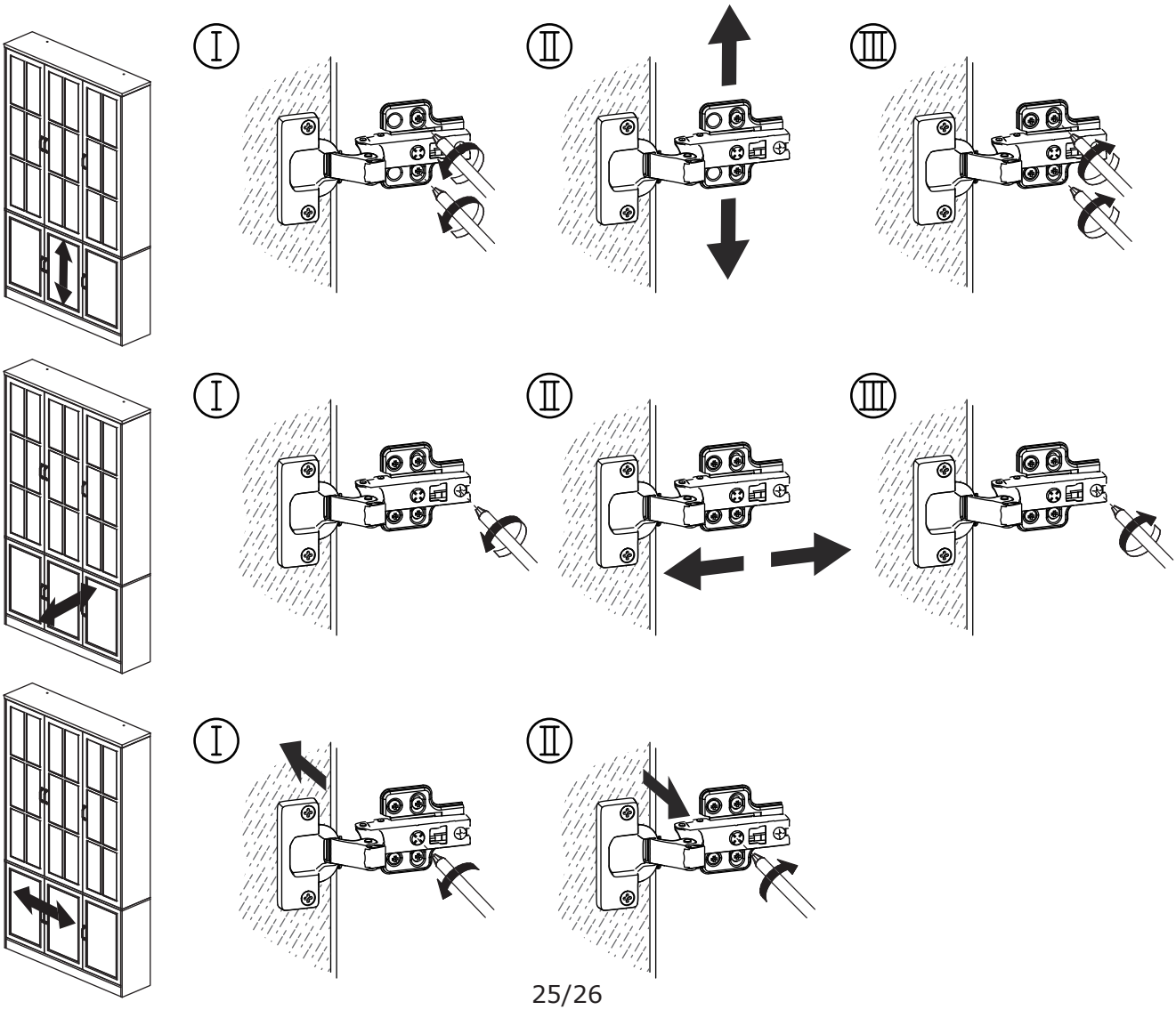

30

H x 2	L x 2	
∅4 x 35 mm	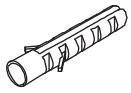	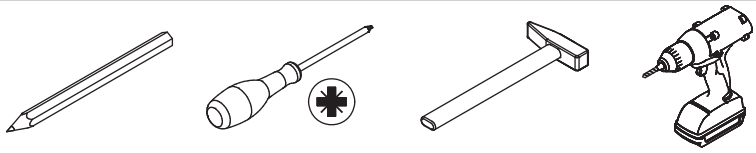

Drill holes on your wall, and install anti-tipping device as shown.

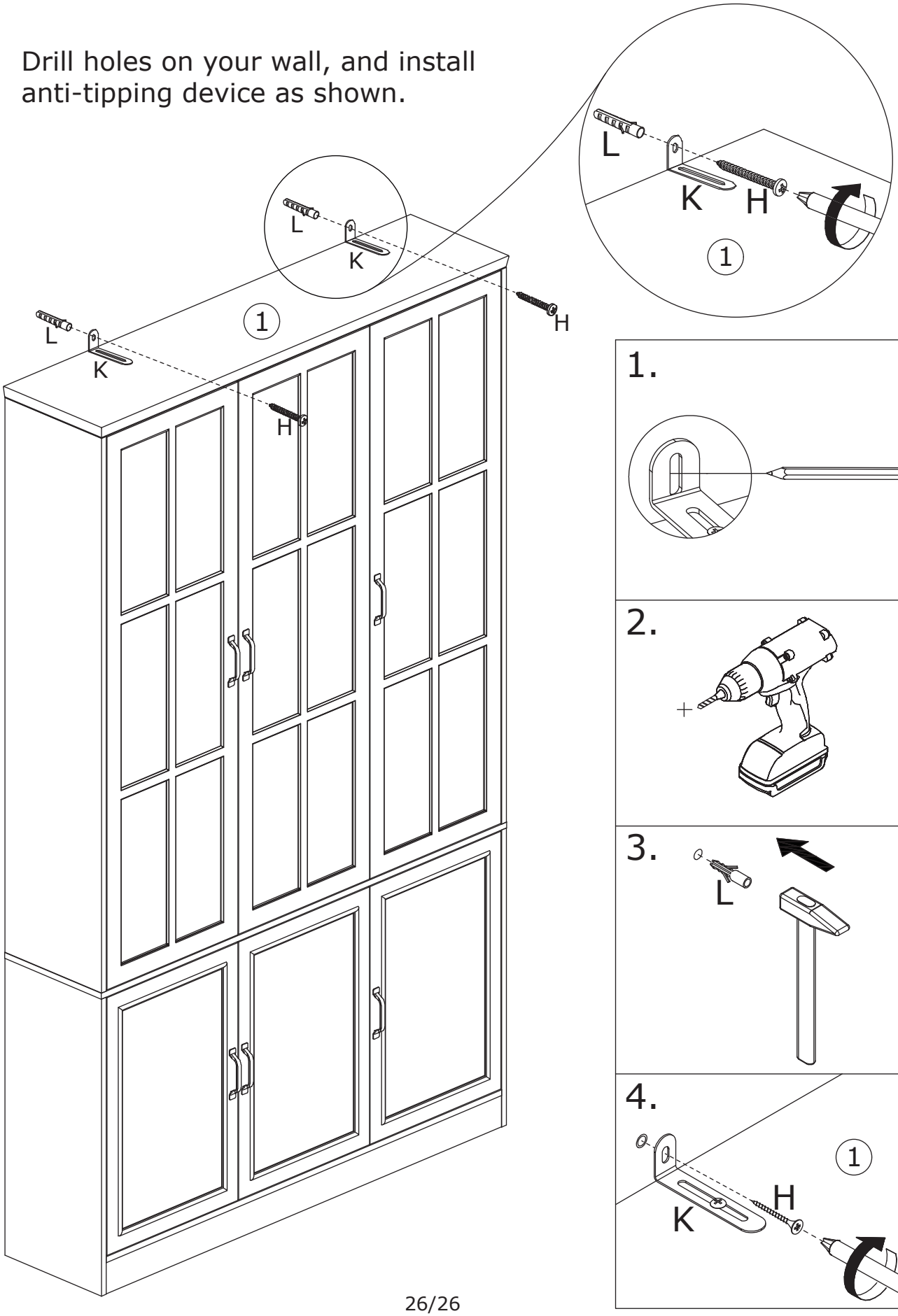

WARRANTY

WARRANTY CLAIMS

•There is a 30-day warranty for broken furniture or any other problems that do not work properly. The warranty will start from the date of purchase which must be verified by proof of purchase.

•Before making a claim, we may be able to answer your query, simply call us. Please leave your purchase order number, along with some details of the problem, if you want a replacement part. We will arrange within 48 hours. If there is out of stock, we will reply with a shipping date.

•The product must be used in accordance with the instructions provided. For health reasons.

•For other reasons, if the furniture needs to be returned, it must be cleaned and dried and operated within 30 days of receipt.

Type of Warranty Claim

•Failure to follow the furniture instructions will invalidate the warranty. Attention please.

•Does not include damage during installation, but includes damage during transportation.

Scope of responsibility

•Shall not bear any responsibility for misuse or user damage and / or loss of parts during the installation of furniture.

•After using, the damage and scratches of the furniture are not covered by the warranty.

The Warranty Relates to All Bought in The Us and Covers The Following Areas

•Sheet parts: 1 month from the date of purchase.

•Electrical parts: 1 month from the date of purchase.