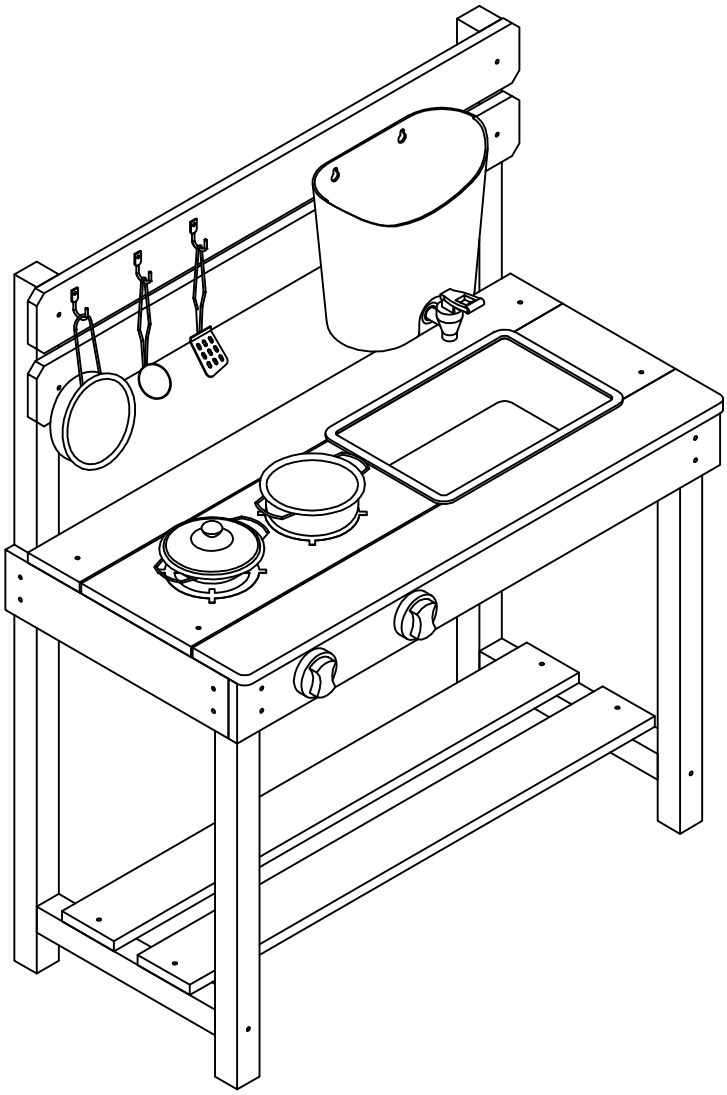



⚠ WARNING:

CHOKING HAZARD-Smallparts
Not for children under 3 yrs

⚠ WARNING:

Adult assembly required, Product includes small parts with potentially hazardous sharp points and sharp edges in the unassembled state. Keep unassembled parts away from children.

INSTRUCTION MANUAL

Kids Muddy Play Kitchen

PLEASE READ THIS BEFORE STARTING ASSEMBLY

WARNING

- Please do not exceed the weight limitations of this item.
- Do not stand on or use any part of this item as a step ladder.
- Firmly secure all bolts, screws and knobs before use.
- Reconfirm that all bolts, screws, and knobs are secure every 90 days.
- Fasten screws loosely during initial assembly.
- Do not firmly tighten the screws until the item is completely assembled.
- Do not use or store this item in the proximity of open flame or flammable/combustible chemicals.
- Be aware that some parts are heavy and have sharp edges.
- If any parts are missing, broken, damaged, or worn, stop using this product until repairs are made and/or factory replacement parts are installed.
- Do not use this item in a way inconsistent with the manufacturer's instructions as this could void the product warranty.

Please Contact Us if You Need Any Helps:
Regarding any assemble issue : Parts Replacement and Quality Comments .

patioseat@gmail.com

We Will Reply at Very First Time During Mon.~Fri.

Warranty covers any manufacturing defect with 90 days

About Solid Wood

Our products uses only premium lumber, ensuring the safest product for your use. Although we take great care in selecting the best quality lumber available,wood is still a product of nature and susceptible to weathering which can change the appearance of your set.

What causes weathering? Does it affect the strength of my Chair?

One of the main reasons for weathering is the effects of water (moisture); the moisture content of the wood at the surface is diferent than the interior of the wood. As the climate changes, moisture moves in or out of the wood, causing tension which can result in checking and or warping. You can expect the following due to weathering. These changes will not affect the strength of the product:

1. **Checking** is surface cracks in the wood along the grain.

2. **Warping** results from any distortion (twisting, cupping) from the original plane of the board and often happens from rapid wetting and drying of the wood.

3. **Fading** happens as a natural change in the wood color as it is exposed to sun-light and will turn a grey over time.

How can I reduce the amount of weathering to my chair ?
Sunlight will break down the wood or coating, applying a water repellant or stain on a yearly basis is important maintenance. (see your local stain and paint supplier for a recommended product)

TOOLS RECOMMENDED	
 SCREWDRIVER	 X 2 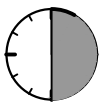 30 min

PARTS

1

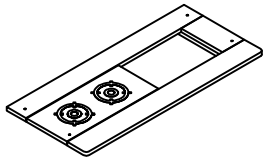

1 PC

2

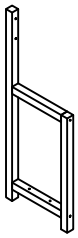

2 PCS

3

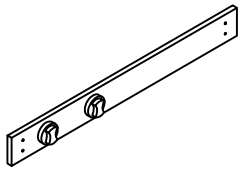

1 PC

4

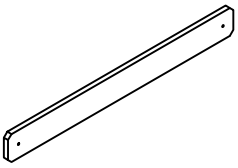

2 PCS

5

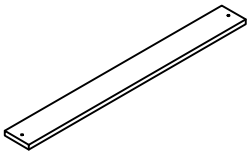

2 PCS

6

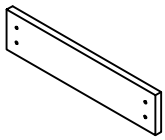

2 PCS

HARDWARE

a

M3x12mm SCREW



3 PCS

b

M3x16mm SCREW



2 PCS

c

M4x30mm SCREW



24 PCS

d

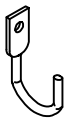

3 PCS

e

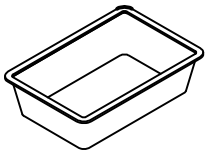

1 PC

f



1 PC

g

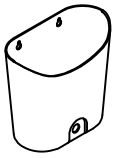

1 PC

h



1 PC

Note:To Save installation time,It's Reconmend to identify Compoments before assembly!

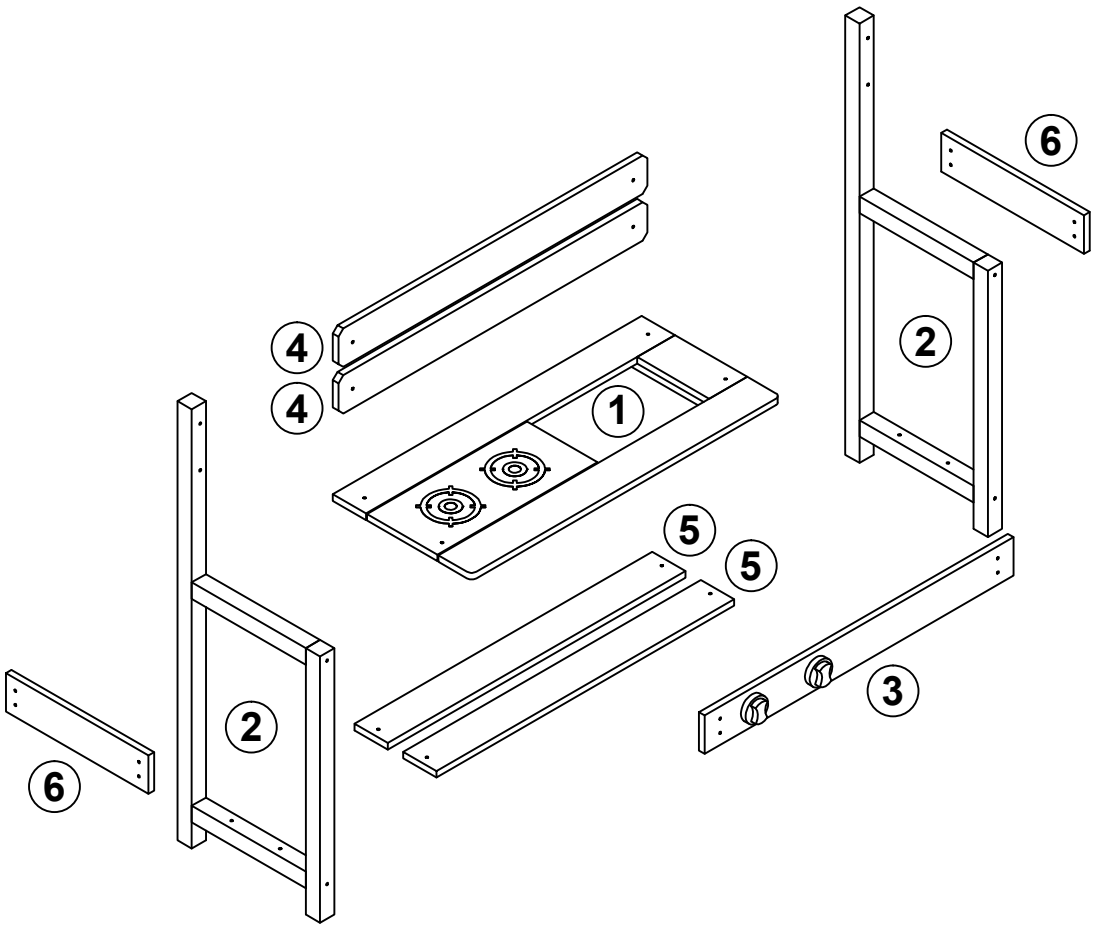

1

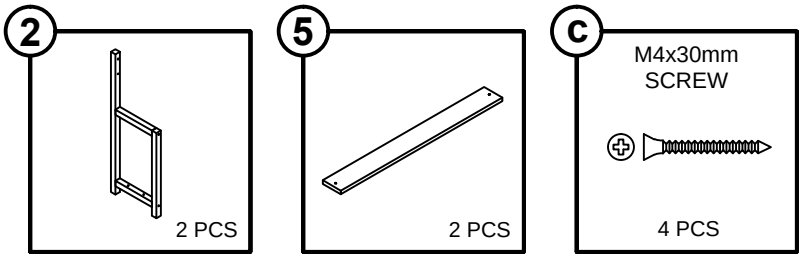

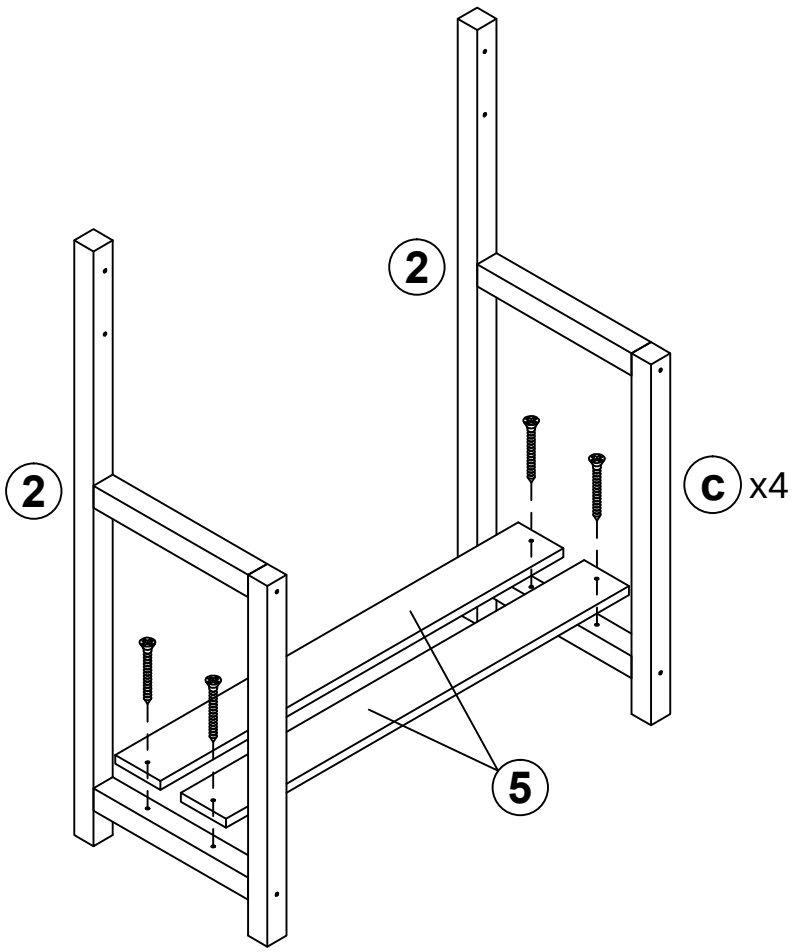

2

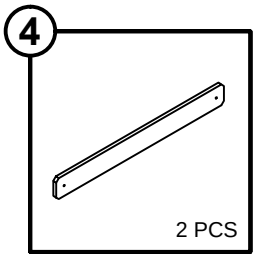

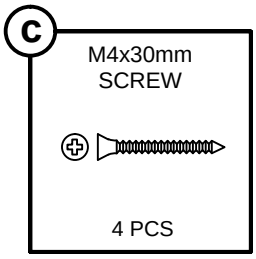

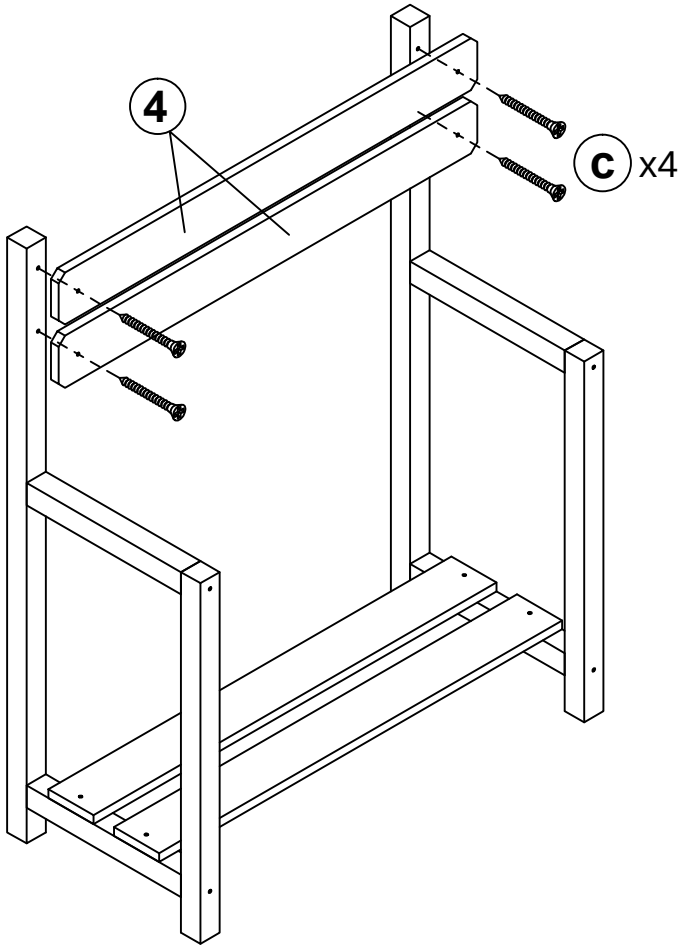

3

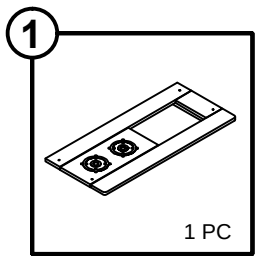

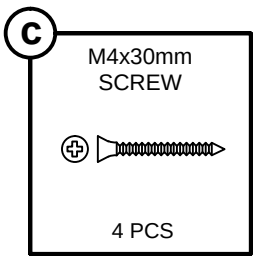

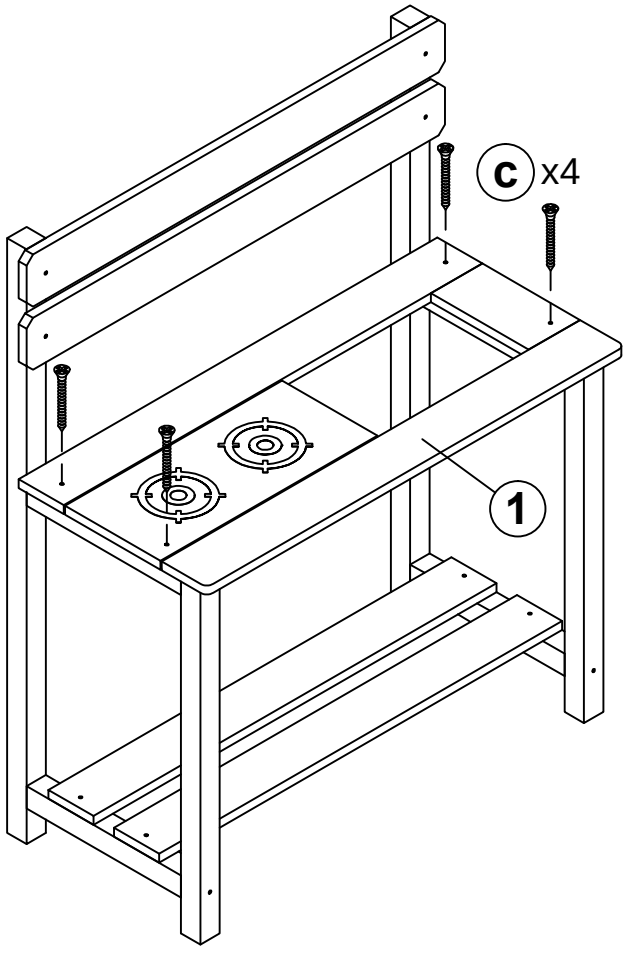

4

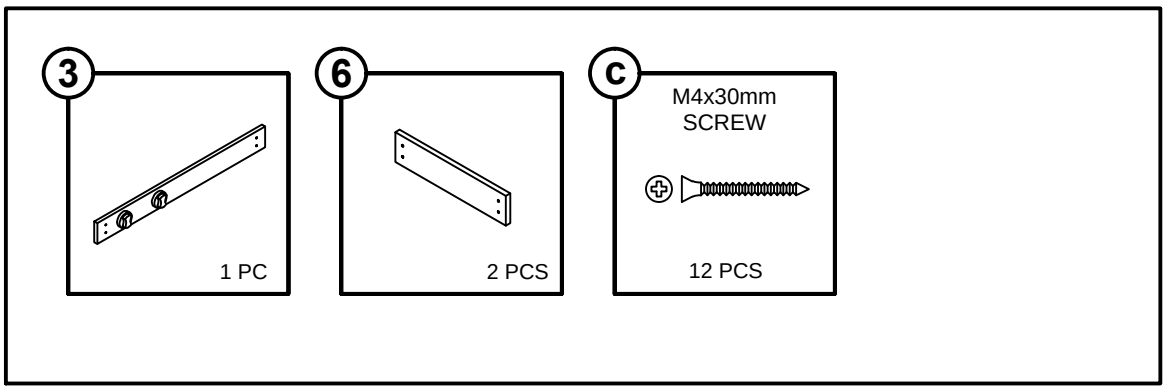

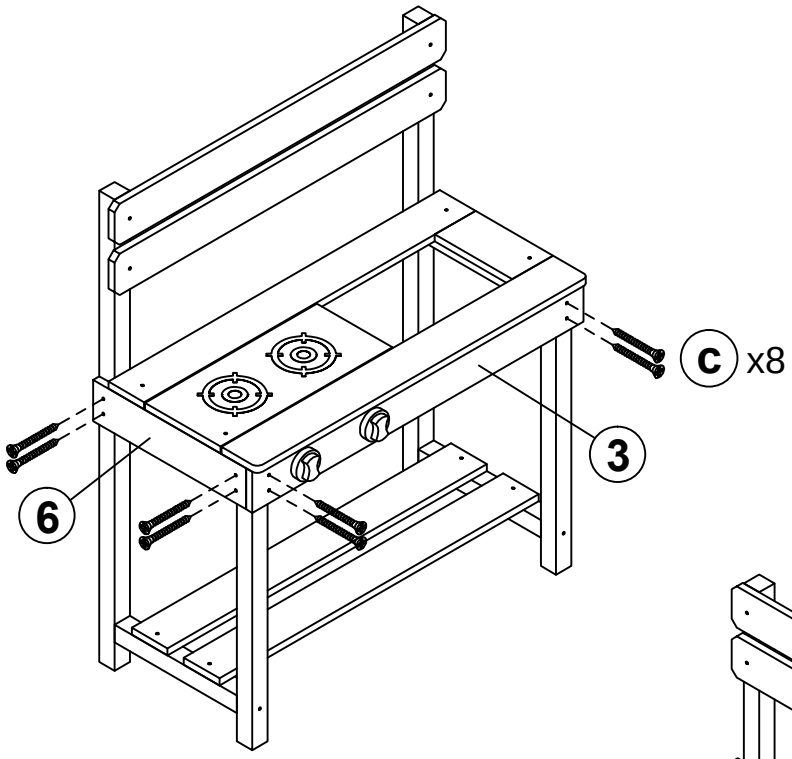

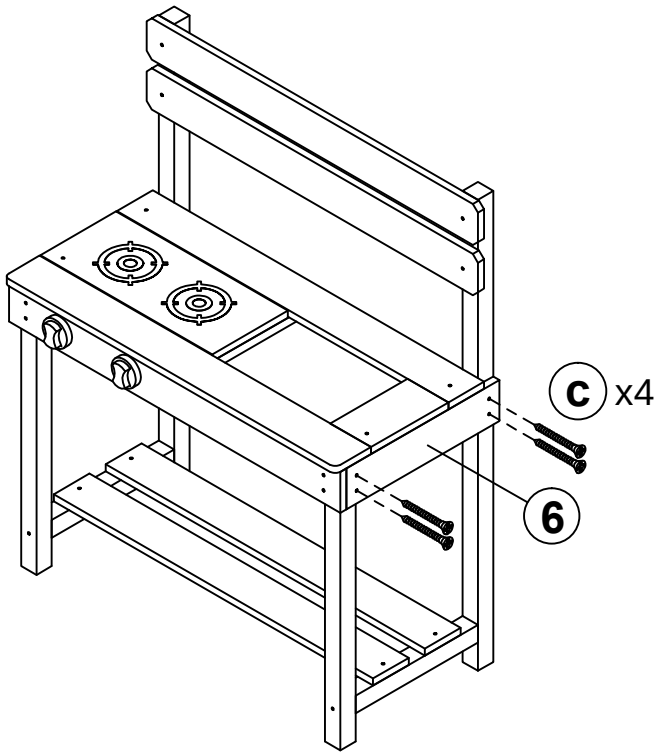

5

a
M3x12mm SCREW
3 PCS

b
M3x16mm SCREW
2 PCS

d
3 PCS

e
1 PC

f
1 PC

g
1 PC

h
1 PC

