| | |
|---|---|
| Ax1 | Bx1 |
| Cx2 | Dx1 |
| Ex1 | Fx 2 20cm |
| Gx26 (8*20) | Hx10 (8*50) |
| Ix2 | Jx12 |
| Kx24 | Lx24 |
| Mx4 | Nx2 |
| Ox2 | Px4 12cm |
| Qx16 (3. 5*30) | |

1

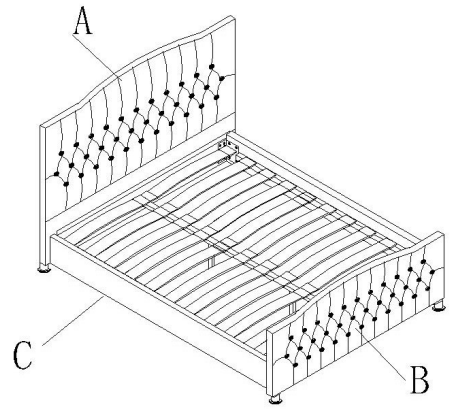


2

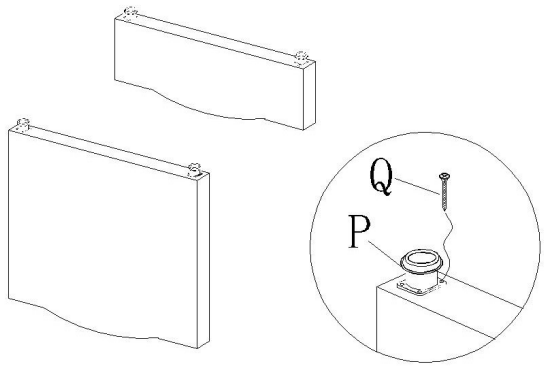


3

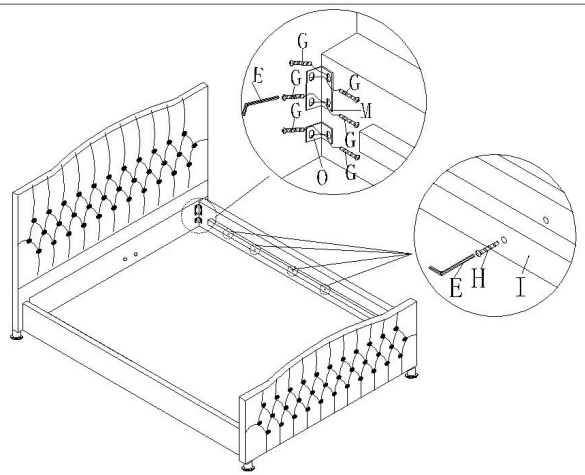


4

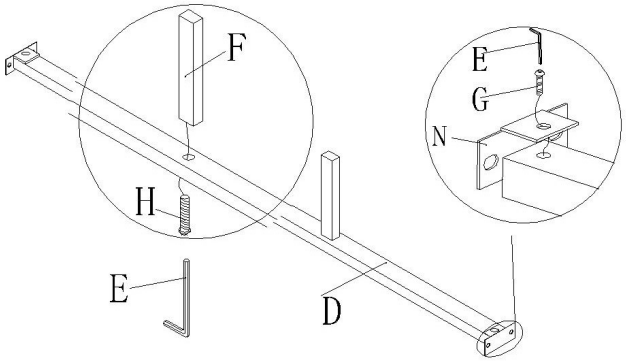


5

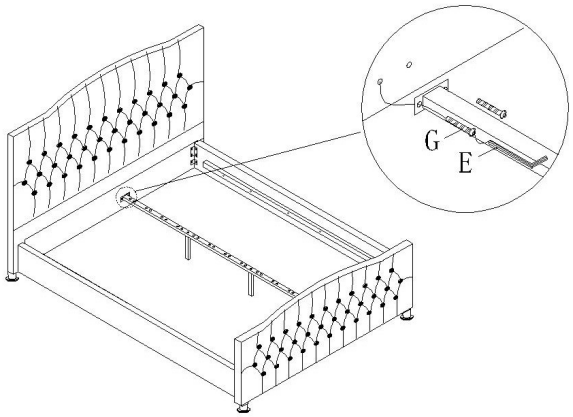

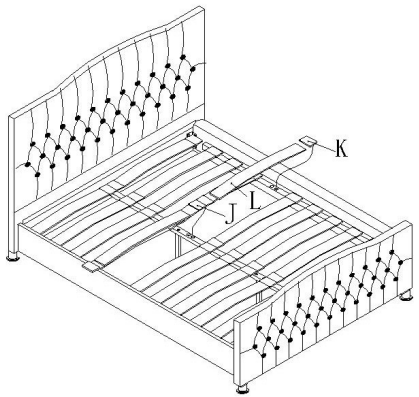
6