BRAND-MAN GRILLS
MAKE YOUR MARK

OWNER'S MANUAL

Badlands Series
2 Burner Gas Griddle

GAS CERTIFIED SGS C US 802706

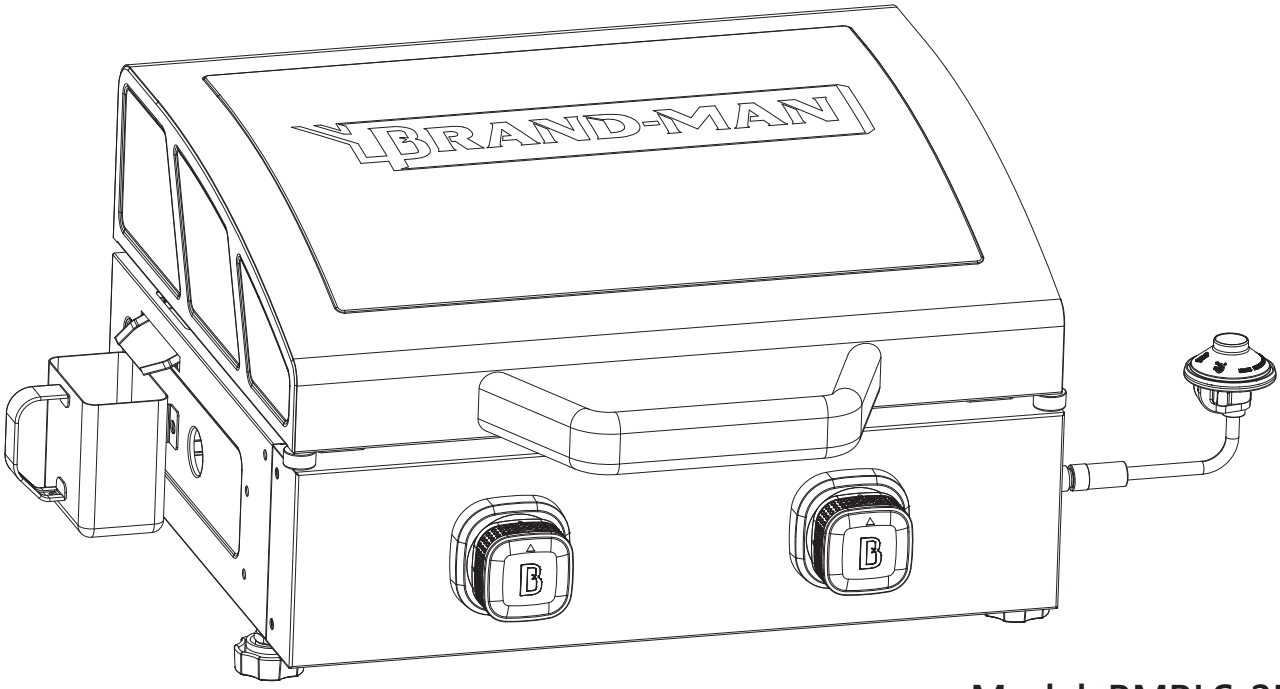

Model: BMBLS-2B
Item: BG2458A2

Important: Keep this Owner's Manual for convenient reference and for part replacement.

Read this Owner's manual carefully and be sure your gas grill is properly assembled, installed and maintained. Failure to follow these instructions could result in serious injury and/or property damage.

Please make sure the cylinder valve connection device shall properly and safely connected with the connection device attached to the inlet of the pressure regulator.

For Outdoor Use Only

Captivate Brands USA, Inc.
25541 Arctic Ocean Drive,
Lake Forest, CA.92630

If you have any questions or problems, you can contact our customer service at 1-855-200-8445 ext 102 or help@supportandspare.com from 9:00 AM - 5:00 PM Monday to Friday. (Pacific). All emails and voice-mail calls will be answered within 24 hours.

SAFETY PRECAUTIONS

READ ALL INSTRUCTIONS BEFORE INSTALLING AND USING THE APPLIANCE
SAVE THESE INSTRUCTIONS

WARNING

1. **Do not store or use gasoline or other flammable liquids or vapors in the vicinity of this or any other appliance.**
2. **An LP gas cylinder not connected for use shall not be stored in the vicinity of this or any other appliance.**

DANGER

If you smell gas:

1. **Shut off gas to the appliance.**
2. **Extinguish any open flame.**
3. **Open hood.**
4. **If odor continues, keep away from the appliance and immediately call your fire department.**

WARNING:

If the outdoor cooking gas appliance is not in use, the gas must be turned off at the supply cylinder(s). Storage of an outdoor cooking gas appliance indoors is permissible only if the cylinder(s) is (are) disconnected and removed from the outdoor cooking gas appliance. Cylinders must be stored outdoors out of the reach of children and must not be stored in a building, garage or any other enclosed area.

WARNING

Combustion by products produced when using this product contain chemicals known to the State of California to cause cancer, birth defects, or other reproductive harm.

WARNING

Failure to comply with these instructions could result in a fire or explosion that could cause serious body injury, death, or property damage.

WARNING

Your grill will get very hot. Never lean over the cooking area while using your grill. Do not touch cooking surfaces, grill housing, hood or any other grill parts while the grill is in operation, or until the gas grill has cooled down after use.
Failure to comply with these instructions may result in serious bodily injury.

WARNING
CALIFORNIA PROPOSITION 65 WARNING:

This product can expose you to chemicals, including carbon monoxide, which are known to the State of California to cause cancer and birth defects or other reproductive harm.
For more information go to: www.P65Warnings.ca.gov

⚠ WARNING

- Cylinders must be stored outdoors out of the reach of children and must not be stored in a building, garage or any other enclosed area.
- The use of alcohol, prescription or non-prescription drugs may impair an individual's ability to properly assemble or safety operate this appliance.
- Always open the barbecue lid carefully and slowly as heat and steam trapped within the barbecue could cause severe burns.
- Always place your barbecue on a hard and level surface far away from combustible materials and structures.
- An asphalt or blacktop surface may not be acceptable for this purpose.
- Do not leave a lit barbecue unattended.
- Keep children and pets away from the barbecue at all times.
- Do not use the barbecue in high winds.
- This barbecue must be used with propane gas only (propane gas cylinder not included).
- Do not attempt to attach this barbecue to the self-contained propane system of a camper, trailer, motor home or house.
- Do not use charcoal or lighter fluid.
- Do not use gasoline, kerosene or alcohol for lighting. The LP-gas supply cylinder must be constructed and make in accordance with the specification for LP-gas cylinders of the US Department of Transportation (DOT) or the Standard for Cylinders, Spheres and Tubes for the Transportation of Dangerous Goods, CAN/CSA-B339.
- This outdoor gas appliance is not intended to be installed in or on recreation vehicles and/or boats.
- Do not attempt to move the barbecue while it is lit.
- Do not use the barbecue unless it is COMPLETELY assembled and all parts are securely fastened and tightened.
- Keep combustible items and surface at least 24" (61 cm) away from the barbecue at all times. DO NOT use this gas barbecue or any gas product under any overhead enclosure or near any unprotected combustible constructions.
- Do not use in an explosive atmosphere. Keep barbecue area clear and free from combustible materials, gasoline and other flammable vapors and liquids.
- Do not attempt to use or assemble with missing or damaged parts. Contact customer service for replacement parts.
- Storage of an appliance indoors is permissible only if the cylinder is disconnected and removed from the appliance.
- This appliance is not intended for and should never be used as a heater.
- Do not place empty cooking vessel on the appliance while in operation. Use caution when placing anything in cooking vessel while the appliance is in operation.

This appliance shall not be used in a building, garage, or any other enclosed area.

This appliance is not intended to be installed in or on a boat.

- When cooking with oil or grease, have a type BC or ABC fire extinguisher readily available.
- In the event of an oil or grease fire do not attempt to extinguish with water. Immediately call the fire department.
- In the event of rain, snow, hail, sleet, or other forms of precipitation while cooking with oil or grease, cover the cooking vessel immediately and turn off the appliance burners and gas supply. Do not move the appliance or cooking vessel.

WARNING

Do not use this appliance under overhead combustible surface or covered area (e.g., awnings, umbrellas, porches or gazebos). Always confirm that this barbecue is not positioned under the overhang of a house, a garage or other structure before lighting it. An overhang will serve to deflect flare-ups and radiated heat into the structure itself, which could result in a fire.

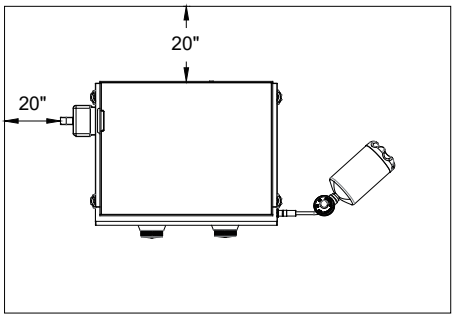

Always confirm that this barbecue is positioned more than 20″ (610mm) away from any combustible materials or surface before lighting it, and that no gasoline or other volatile substances are stored in the vicinity of this barbecue (see diagram to right).

The temperature of a grease fire or of the radiated heat might be sufficient to ignite nearby combustible or volatile substances.
Always locate this barbecue where there will be ample combustion and ventilation air. Do not obstruct the flow of combustion and ventilation air but never position it in the direct path of a strong wind. Never allow the barbecue to operate while unattended to prevent uncontrolled grease fires from erupting. Never attempt to move this barbecue while it is in operation or while it is still hot to prevent possible personal injury. Never store or use gasoline or other flammable or volatile substances in the vicinity of this barbecue or in the vicinity of any other heat-generating appliance because of the danger of starting a fire. Always confirm that installation of this barbecue conforms with the requirements of all local codes or, in the absence of applicable local codes, with either the National Fuel Gas Code, ANSI Z223.1/NFPA 54, Storage and Handling of Liquefied Petroleum Gases, ANSI/NFPA 58, Natural Gas and Propane Installation Code, CSA B149.1, Propane Storage and Handling, CSA B149.2.

DANGER-GAS SAFETY

Liquid propane (LP) gas is flammable and hazardous if handled improperly. Become aware of its characteristics before using any propane product.

- Propane Characteristics: flammable explosive under pressure heavier than air and pools in low areas.
- In its natural state, propane has no odour. For your safety, an odourant has been added.
- Contact with propane could cause freeze burns to the skin.
- This barbecue is shipped from the factory for propane gas use only.
- Never use a propane cylinder with a damaged body, valve, collar or footing.
- Dented or rusted propane cylinders may be hazardous and should be checked by your propane gas supplier.

CAUTION

It is essential to keep the barbecue's valve compartment, burners and circulating air passages clean. Inspect the barbecue before each use.

1. Inspect all connections and make certain they are secure.
2. Check and clean the burner tubes for insects and insect nests by removing the burner and inserting a bottle brush cleaner into each tube to make sure the passage is clear. A clogged tube can lead to a fire beneath the barbecue.
3. Ensure that the valve nozzle is pointing straight and completely inserted into the tube.

GENERAL INFORMATION

1. A propane gas cylinder is required for operation.
2. This gas barbecue is NOT intended for commercial use.

TABLE OF CONTENTS

Safety Precautions ----------2-4

Burner Flame Check---------- 4

Model Description---------- 6

Tools Required for Assembly---------- 6

Parts Diagram---------- 7

Parts List---------- 7

Hardware ---------- 7

Assembly Steps ----------8-11

Connecting LP Gas cylinder to LP Grill --------- 12

Operating Instructions ---------- 12-14

Cleaning and Care ---------- 15-16

Warranty ---------- 17

Customer Service---------- 17

Troubleshooting---------- 18

2 Burners Grill Description

2 burners gas griddle barbecue designed with:
2 independently controlled stainless steel burners;
The rated power of each main burner is 9,000 BTU with a total of 18,000BTU;
Push and turn ignition system for firing up;

Tools Required for Assembly

Philips Head Screwdriver (not included)

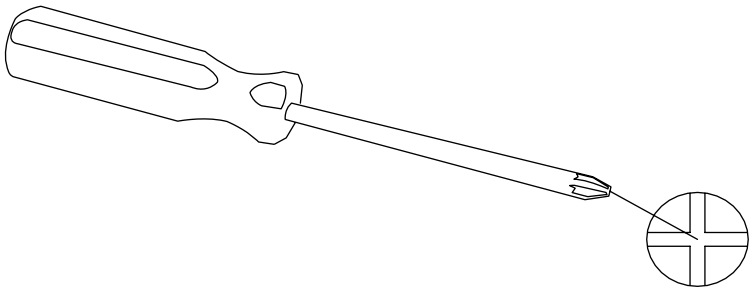

Parts Diagram

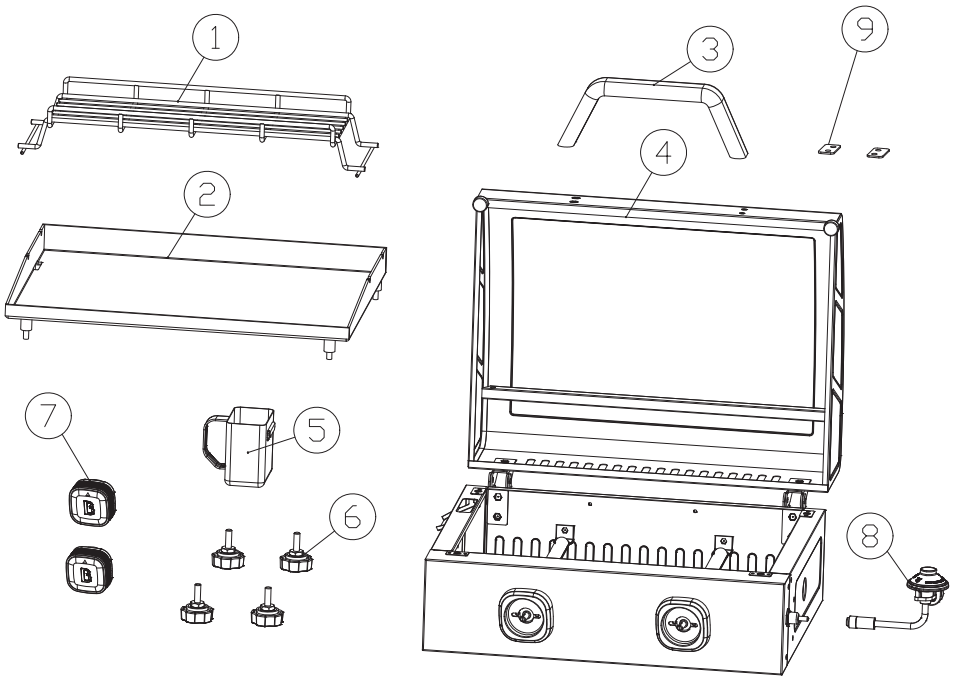

Parts List

Part #	Description	Qty
1	Warming Rack	1pc
2	Griddle	1pc
3	Hood Handle	1pc
4	Firebox Assembly	1pc
5	Grease Cup	1pc

Part #	Description	Qty
6	Foot	4pcs
7	Knob	2pcs
8	Regulator	1pc
9	Heat Separator	2pcs

Hardware List

Part#	Picture	Qty	Specification
A		4	Bolts (M6X20)
B		4	Flat Washer (Ø6.2)
C		4	Spring Washer (Ø6.2)

Assembly Steps

Step 1

• Screw on the four Foot (6) onto each base corner of the Firebox Assembly (4) as shown.

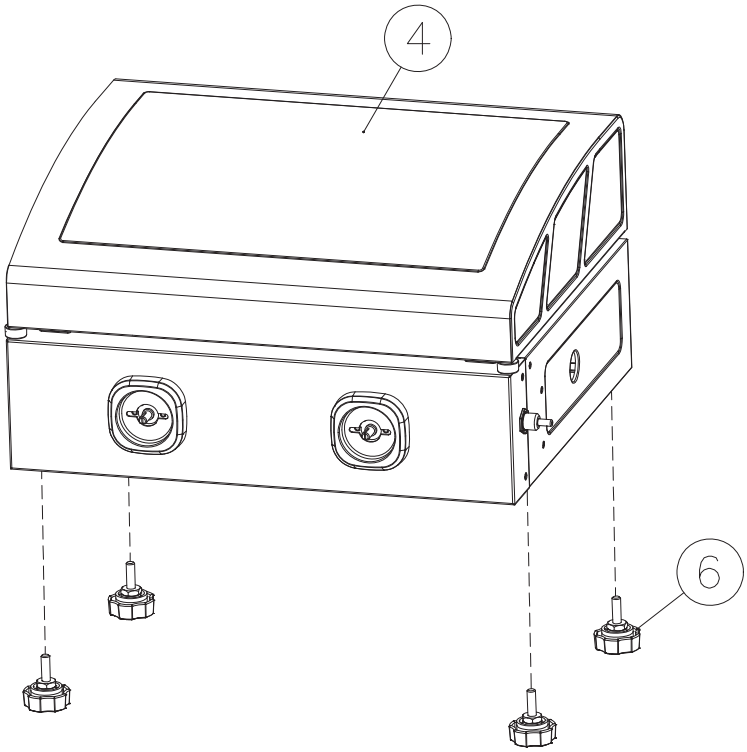

Step 2

• Attach two Knobs (7) at the front of the Firebox Assembly as shown.

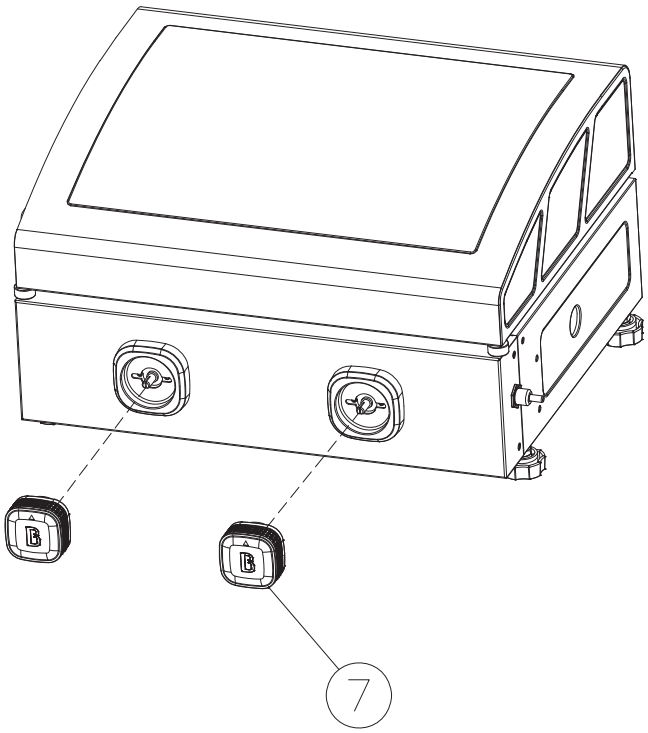

Step 3

• Install the Hood Handle (3) onto the hood with two Heat Separators (9), four screws (A), four flat washers (B) and four lock nut (C).

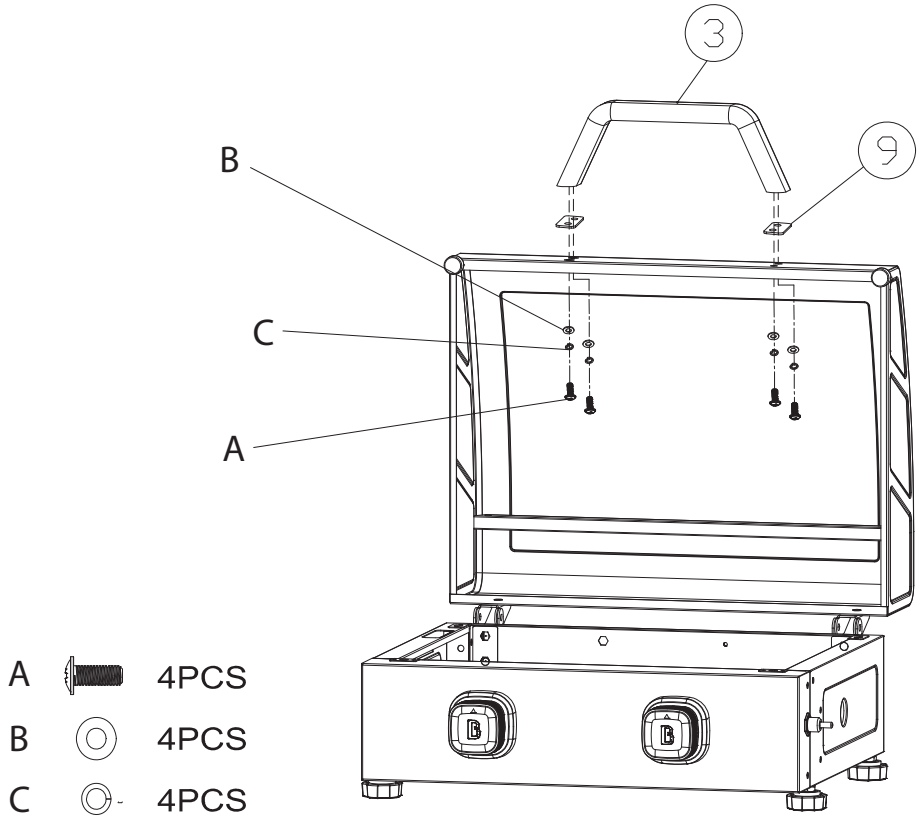

Step 4

• Open the hood and put on the Griddle (2) into the firebox as shown.

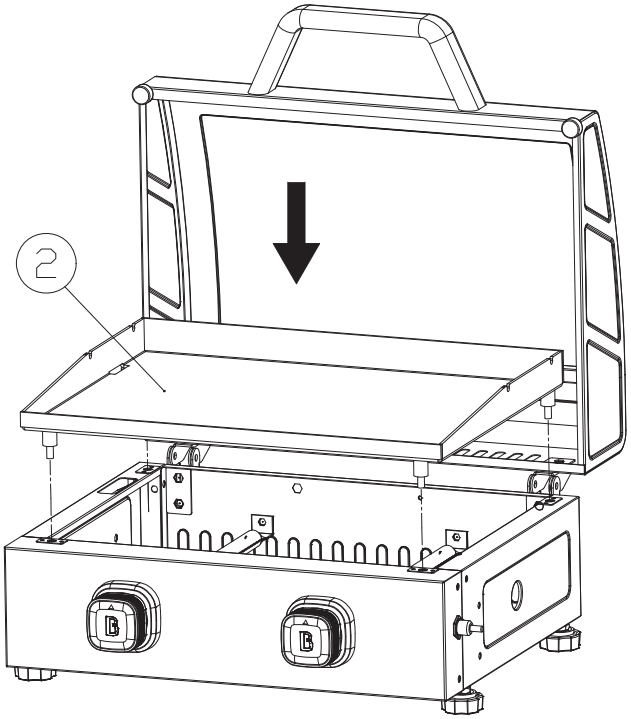

Step 5

• Put on the Warming rack onto the back of the griddle as shown below.

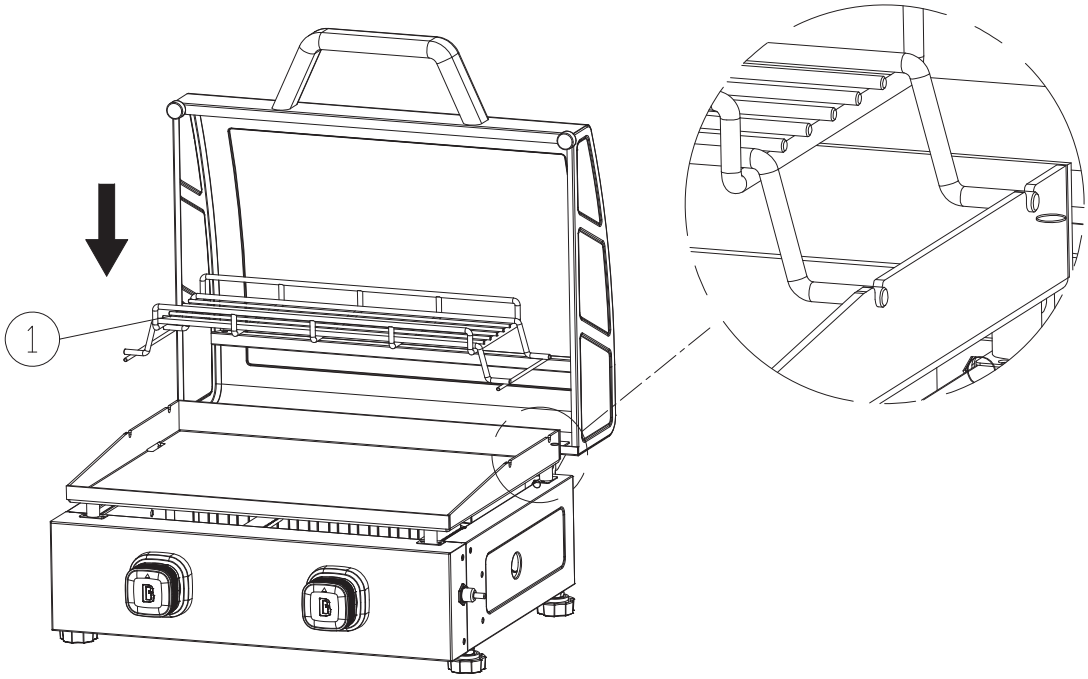

Step 6

• Hook on the Greas Cup (5) as the side of the firebox.

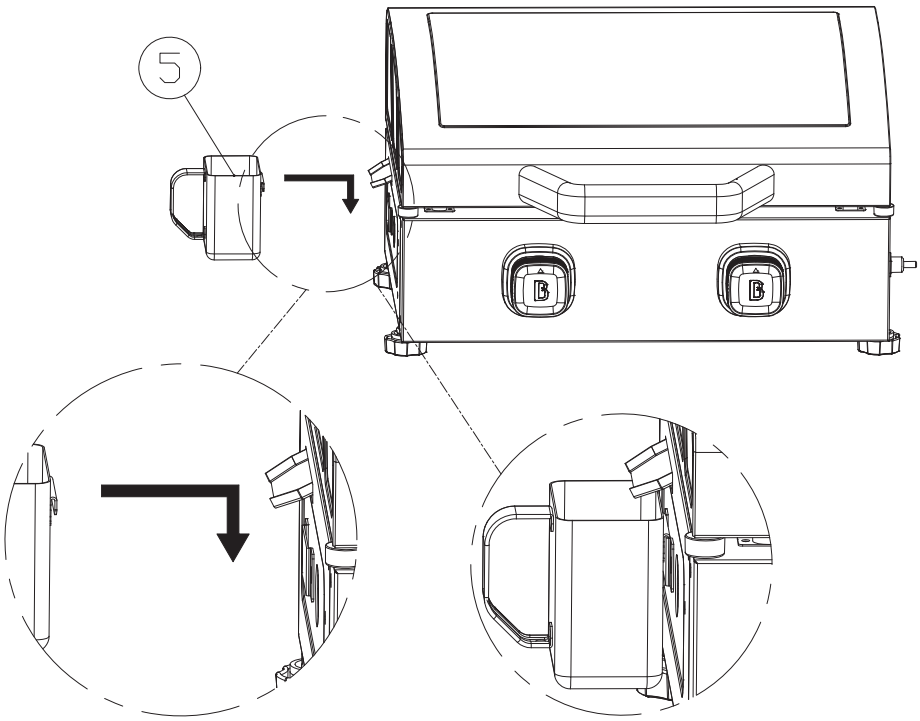

Step 7

- Attach the regulator (8) onto the connection as the side of the firebox by turning it in clockwise direction.

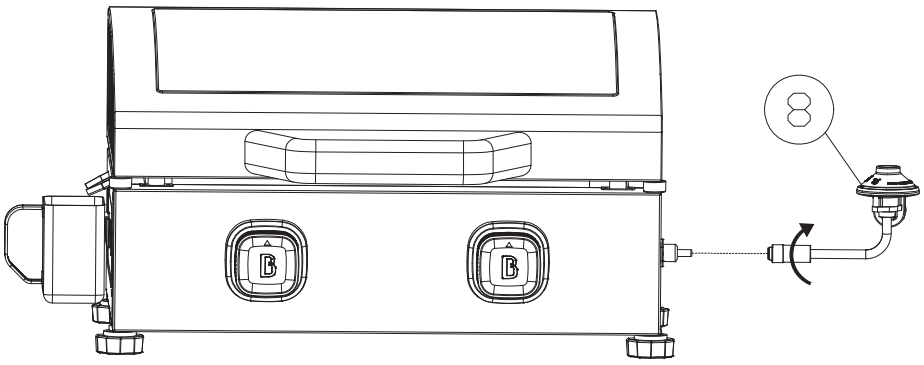

CONNECTING TO A GAS SUPPLY

GAS CYLINDER REQUIREMENTS

The griddle is set and tested with liquid propane gas only. When purchasing a gas cylinder for use with this unit, ensure it meets the following requirements: 0.45 kg (1 lb) / 19.6 cm (7.75 in) capacity, marked “PROPANE", constructed and marked in accordance with Specifications for LP Gas Cylinders of the U.S. Department of Transportation (DOT) or the National Standard of Canada, CAN\CSA-B339, Cylinders, Spheres and Tubes for Transportation of Dangerous Goods; and Commission, as applicable (see label for marking). This griddle has been provided with a cylinder connection device that is compatible with the griddle’s regulator port.

CAUTION: It is important to inspect the cylinder connection device. Check the propane tank valve rubber seal for cracks, wear or deterioration prior to use. A damaged rubber seal can cause a gas leak, possibly resulting in an explosion, fire, or severe bodily harm. Do not use a propane tank with a damaged rubber seal.

INSTALLING A GAS CYLINDER

1. Make sure burner control knob is turned to “O” by pushing it in and turning it clockwise to the “O” position.
2. While holding carrying handle closest to propane cylinder with one hand, push propane cylinder into regulator and turn clockwise until tight.
3. For optimum performance, allow cylinder to hang vertically off the edge of the table or sits stable on a table (clean, level surface) where there is no danger of being bumped or disturbed. Note proper positioning shown. The cylinder angle to the horizontal plane should not be less than 35 degrees.
4. Gas cylinder is now installed.

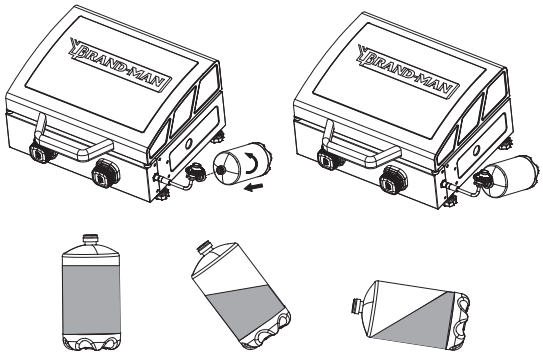

The cylinder supply system must be arranged for vapor withdrawal

The outdoor grill, when installed, must be electrically grounded in accordance with local codes or, in the absence of local codes with the National Electrical Code ANSI/NFPA 70, or Canadian Electrical Code, CSA C22.1.

1. Do not store a spare LP gas tank under or near this appliance.
2. Never fill the tank beyond 80 percent full.
3. If the information in 1) and 2) is not followed exactly a fire causing death or serious injury may occur.

DISCONNECTING A GAS CYLINDER

1. Ensure the control knob on the griddle is completely closed by turning to the “O” position. Turn LP gas tank valve to the CLOSED position, and allow the regulator knob to pop out.
2. Turn the cylinder counter-clockwise (by hand) to disconnect from the regulator valve opening. Replace the protective caps on the regulator valve opening and the top of the gas cylinder for storage (if not empty).

NOTE: If storing the griddle indoors, leave the gas cylinder outdoors.

WARNING: Do not transport griddle with gas cylinder attached. The cylinder may loosen off the valve, and cause a gas leak, possibly resulting in an explosion, fire, or severe bodily harm. Disconnect gas cylinder first before travel or storage.

OPERATING INSTRUCTIONS

⚠ DANGER

To prevent fire or explosion hazard when testing for a leak:

1. Always perform the leak test on page 13 before lighting the barbecue and each time the cylinder is connected.
2. Do not smoke or allow other sources of ignition in the area while conducting a leak test.
3. Conduct the leak test outdoors in a well- ventilated area.
4. Do not use matches, lighters or a flame to check for leaks.
5. Do not use barbecue until all leaks have been stopped. If you are unable to stop a leak, disconnect the propane supply, call for gas appliance service or your local propane gas supplier.

CHECKING FOR LEAKS

1. Make two to three oz. of leak solution by mixing one part liquid dish washing soap with three parts water.
2. Make sure control knobs are in the "O" position.
3. Spray some solution on the tank valve up to the regulator connection.
4. Inspect the solution at the connections for bubbles. If no bubbles appear, the connection is secure.
5. If bubbles appear, you have a leak. Go to step 6.
6. Disconnect the regulator from the tank and reconnect. Make sure the connection is secured.
7. Retest with solution.
8. If you continue to see bubbles, replace the cylinder.

LIGHTING YOUR BARBECUE

⚠ **DANGER: Failure to open lid while igniting the barbecue's burners or not waiting five minutes to allow gas to clear if the barbecue does not light, may result in an explosion, which could cause serious bodily injury or death.**

⚠ **WARNING: To prevent possible bodily injury, never stand with your head directly over the barbecue when preparing to light the main burners.**

Before using your griddle for the first time with food, it is important to complete a burn-off. Start the griddle and operate for a minimum of 15 minutes on HIGH to burn-off the unit. This will "heat clean" the internal components, dissipate odors and rid it of any foreign matter.

LIGHTING PROCEDURE

1. Verify that all control knobs are turned to the "O" position.
2. Connect LP gas cylinder as per instructions. Turn LP gas tank valve to OPEN.
3. Note the indicator marker on the control knob. Push and hold down the control knob on the griddle and turn 90 degrees (or 1/4) counter-clockwise SLOWLY (2 to 3 seconds) to "🔥" . You should hear a "click" sound to indicate a spark from the igniter, and look for flame to ensure the burner is lit. If it does not, repeat up to three times.
4. If ignition does not occur in 5 seconds, turn the control knob to "O", wait 5 minutes and repeat lighting procedure. If the above points do not work, follow Manual Lighting Procedure instructions.
5. After the burner has caught fire, you are ready to enjoy your griddle at your desired temperature!

If the burner goes out during operation, turn the control knobs to the "O" position. Wait five minutes before attempting relight to allow any accumulated gas to dissipate.

IGNITER FAILURE PROCEDURE

If for any reason your igniter fails after three of four attempts, check the following steps, or start your griddle using the manual method.

1. Ensure the control knobs are turned to the "O" position. Allow any accumulated gas to dissipate.
2. After five minutes, check the following:
   - Visually confirm that the igniter is working by pushing the igniter button and looking at the igniter tip for a spark. If no spark, adjust the distance between the igniter (electrode) tip and burner to 4.5mm (3/16 in).
   - Visually confirm that the burner tube and portholes are not obstructed. If blocked, follow Care & Maintenance instructions.

MANUAL LIGHTING PROCEDURE

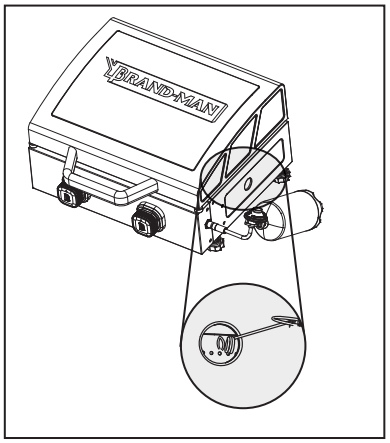

1. Verify that the control knob is turned to the "O" position.
2. Connect LP gas cylinder as per instructions. Turn LP gas tank valve to OPEN.
3. Note the indicator marker on the control knob. Push in the regulator knob and turn 90 degrees (or 1/4) counter-clockwise to " 🔥 " .
4. Quickly and carefully, use a lit match secured with the lighting rod (included with the grill) to light burners. Access the burners through the cooking grid and hot plate. Position lit match near side of burner.
   Do not attempt to light another area of the burner. This can cause injury.

NOTE: Do not use spirit, lighter-fluid or kerosene for lighting or refreshing a fire in your griddle.

5. After the burner has caught fire, you are ready to enjoy your griddle at your desired temperature!

   Flare-ups:
   "Flare-ups" sometimes occur when food drippings fall onto the hotplate, or burner and ignite. Some flaring is normal and desirable as it helps impart the unique flavors associated with barbecue foods. Controlling the intensity of the flare-ups is necessary, however, in order to avoid burned or unevenly cooked foods and to prevent possibility of accidental fire.

⚠ **WARNING: Always monitor the barbecue closely when cooking and turn the flame level down " 🔥 " or "O" if flare-ups intensity.**

SHUTTING OFF YOUR GRIDDLE

1. When finished cooking, turn LP gas cylinder valve to the **"CLOSED"** position, and allow the regulator knob to pop out.
   This safety feature locks the regulator knob to ensure that the gas is no longer flowing.
2. Turn control knobs to the "O" position.

NOTE: A "poof" sound is normal as the last of the LP gas is burned.

3. Disconnect LP gas tank by following the Disconnecting A Gas Cylinder instructions.

WARNING: Allow the griddle to cool completely, and remove the gas cylinder, before moving, travel, or for storage.

CLEANING AND CARE

⚠ CAUTION:

1. All cleaning and maintenance should be done when Barbecue is cool and with the fuel supply disconnected.
2. DO NOT clean any barbecue part in self-cleaning oven. The extreme heat will damage the finish.
3. DO NOT enlarge valve orifices or burner ports when cleaning the valves or burners.

Notices

1. This Barbecue should be thoroughly cleaned and inspected on a regular basis.
2. Abrasive cleaners will damage this product.
3. Never use oven cleaner to clean any part of Barbecue.

Before Each Use

1. Keep the barbecue area clean and free from any combustible materials, gasoline, and other flammable vapors and liquids.
2. DO NOT obstruct the flow of the combustion of LP gas and the ventilation of air.
3. Keep the ventilation opening(s) of the LP gas tank area free and clear from debris.
4. Visually check the burner flames to make sure your barbecue is working properly (Figure E).
5. See sections below for proper cleaning and seasoning instructions.
6. Check for obstruction of airflow to the burners. Spiders, insects and webs can clog the burner/venturi tube. A clogged burner tube can lead to a fire.

Cleaning Surfaces

1. Wipe surfaces clean with mild dish washing detergent or baking soda mixed with water.
2. For stubborn surfaces, use a citrus-based degreaser and a nylon scrubbing brush.
3. Rinse clean with water.
4. Allow to air dry.

Cleaning Main Burners

1. Turn the regulator valve to to “LOCK OFF” position.
2. Turn valve clockwise to the “OFF” position.

Note: A “poof” sound is normal as the last of the gas is burned.

3. Disconnect LP gas tank per “Disconnecting LP Gas Tank” section.
4. Remove cooking grid.
5. Remove burners by removing the fasteners, which secure the burners to the barbecue.
6. Unscrew the regulator from the burner and lift burners up.
7. Disconnect wire from spark electrode.

Figure E

Burner Flame Conditions
Use this chart to see if your burners need to be cleaned

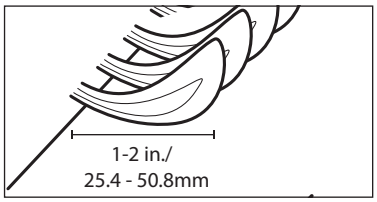

Normal: Soft blue flames with yellow tips between 1 in- 2 in. height.

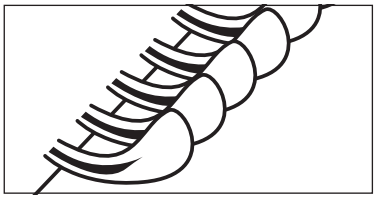

Needs cleaning: Noisy with hard blue flames.

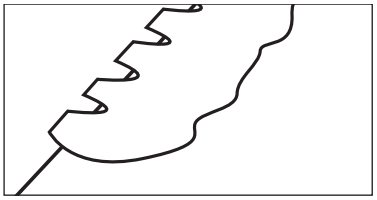

Has to be replaced: Wavy with yellow flames.

CLEANING AND CARE

CLEANING FREQUENCY

Follow these cleaning and maintenance tips to service your griddle:

1. BURNER COMPONENTS

- Clean the burner whenever heavy build-up is found, to ensure that there are no signs of blockage (debris, insects) on the burner tube or in the burner portholes. After periods of storage, spiders or small insects can build nests, webs, and lay eggs in the burner tube, obstructing the flow of gas to the burner. If storing the griddle or before an extended period of non-use, remove the burner and wrap with aluminum foil to reduce the risk of insects entering the burner holes.
- The burner has been preset for optimal flame performance. A blue flame, possibly with a small yellow tip, is the result of the optimal air and gas mixture. If flames are excessively yellow, orange or irregular, clean the oil and food deposits on the burner surface and the burner portholes to increase airflow.
- Re-install the burner. Checking to ensure the gas valve orifice is correctly positioned inside the burner/ venturi tube. Also connect wire to spark electrode.

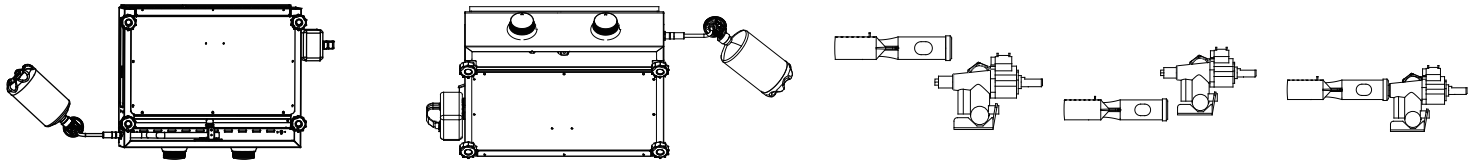

View the correct position from are bottom of the firebox

Wrong

Wrong

Correct

2. GRIDDLE SURFACE

- Your griddle comes preseasoned from the factory, but it is important to clean and season your griddle after each use to prevent rust, extend the life of your griddle, and create a non-stick cooking surface. The seasoning of your griddle is a continuous process that must be repeated over the life of your griddle to ensure the best cooking experience and longest life for your griddle.

  1. Clean the griddle after each use, using a spatula or scraper to remove all food and debris from cooking surface.
  2. Liberally apply an even coat of cooking oil to the cooking surface. Vegetable, olive, peanut, coconut, and sesame oils are all suitable for seasoning your griddle.
  3. Turn the griddle off, and allow to cool in a cool, dry location.

⚠ CAUTION: Do NOT use corn oil as it contains a high level of sugar, which can caramelize and burn onto the surface.

- Remove any food or build-up from the cooking surface. Best practice is to do this while it is still warm from a previous cook. Grease fires are caused by too much fallen debris on the cooking components of the griddle. Clean the inside of your griddle on a consistent basis. In the event you experience a grease fire, carefully remove the food, turn the griddle off. Lightly sprinkle baking soda, if available.
- Check your grease cup often, and clean out as necessary. Keep in mind the type of foods that are cooked.
- Use a grill cover to protect your griddle for complete protection! A cover is your best protection against weather and outside pollutants. When not in use or for long-term storage, keep the unit under a cover in a garage or shed, with the gas cylinder removed (must be stored outdoors).

CLEANING TIME TABLE (NORMAL USE)

ITEM	CLEANING FREQUENCY	CLEANING METHOD
Cooking surface	After each use	Burn off excess, scrub pad & soapy water, season with cooking oil
Grease cup	After each use	Empty, scrub pad & soapy water
Burner tube, portholes	Every 5-6 uses	Dust, scrub pad & soapy water
Flame tamers	Every 5-6 uses	Scrub pad & soapy water
Burners	Every 5-6 uses	Scrub pad & soapy water

Warranty

Two-Year Limited Warranty

This warranty is non-transferable and does not cover failures due to misuse of improper installation or maintenance.

This warranty is for replacement of defective parts only. We are not responsible for incidental or consequential damage.

This warranty does not cover corrosion or discoloration after the grill is used, or lack of maintenance, hostile environment, accidents, alterations, abuse or neglect.

This warranty does not cover damage caused by heat, abrasive and chemical cleaners, or any damage to other components used in the installation or operation of the grill. And paint is not warranted and may require touch-up.

This warranty is void if this grill is ever used for commercial or rental purposes.

All warranty coverage applies only if this grill is used in the United States.

Some states do not allow the limitation or exclusion of incidental or consequential damages, so the above limitations or exclusions may not apply to you. This warranty gives you specific legal rights, and you may also have other rights that vary from state to state.

Customer Service

Please do not return the grill to store.
If you have any questions or if you need replacement parts, please contact our customer service:

1-855-200-8445

help@supportandspare.com

We are pleased to help you with any question concerning replacement parts or your warranty.
Proof of purchase in the form of an original receipt with date of purchase is required.
DO NOT ship parts or units without a return authorization number. Upon receipt of an authorization number, the product must be shipped prepaid.

TROUBLESHOOTING

WARNING: Always ensure the griddle is completely cooled to avoid injury.

PROBLEM	CAUSE	SOLUTION
Burner Will Not Light	The ignition wire is broken	Contact Customer Service for assistance or a replacement part.
	No igniter spark on electrode	Adjust the electrode. Contact Customer Service for assistance or a replacement part.
	No gas supplied	Check the regulator valve. Check connection for leak.
Grease Fire / Frequent Flare-Ups	Grilling fatty meats	Grill fatty meats when the cooking surface is cold, and the knobs are on the "LOW" setting.
	Cooking temperature	Attempt cooking at a lower temperature. Grease does have a flash point. Keep the temperature under 176°C / 350°F when cooking highly greasy food.
	Water sprayed on gas flames	Do not spray water on gas flames.
Burner blows out	No Gas Flow	Check gas fuel connection, and ensure it is open. Replace gas cylinder if empty.
	Gusting Or High Winds	Turn front of grill away from wind or increase flame height.
Low heat on "HIGH"	Ports blocked	Clear ports of any obstructions.
	Gas tank empty	Refill the gas tank.
Gas Leakage	Improper Installation	Turn the regulator knob to the OFF position, and allow the regulator knob to pop out. Remove the gas cylinder. Re-install and tighten. Perform leak test to ensure proper seal. Replace gas cylinder if damaged.
	Seal Failure	Gas cylinder has corroded, rusted, or has been mishandled. Replace gas cylinder.
	Regulator Failure	Regulator needs to be replaced. Contact Customer Service for a replacement part.
Burner Flames Are Yellow Or Orange	Poor Air Flow	Check burner tube and burner ports for spider webs or other obstructions. *Follow Cleaning and Care* instructions to clean the burner tube.
	Burner Obstruction	
	Grease Cup Is Full, Spilling	Empty grease cup and re-install. Follow *Cleaning and Care* instructions.
	Regulator Valve Is Off	Check the regulator valve connection to the gas cylinder. Remove, then reinstall. Perform leak test.
	Burner Is Dirty	Turn regulator knob to HIGH for five minutes, and burn-off the unit. Follow *Cleaning and Care instructions.*
Griddle surface is rusty	With use,the griddle is no longer seasoned	Follow Cleaning and Care instructions to season the griddle surface.

Captivate Brands USA, Inc.
25541 Arctic Ocean Drive,
Lake Forest, CA.92630
If you have any questions or problems,
you can contact our customer service at
1-855-200-8445 ext 102 or
help@supportandspare.com
from 9:00 AM - 5:00 PM Monday to Friday.
(Pacific). All emails and voice-mail calls
will be answered within 24 hours.