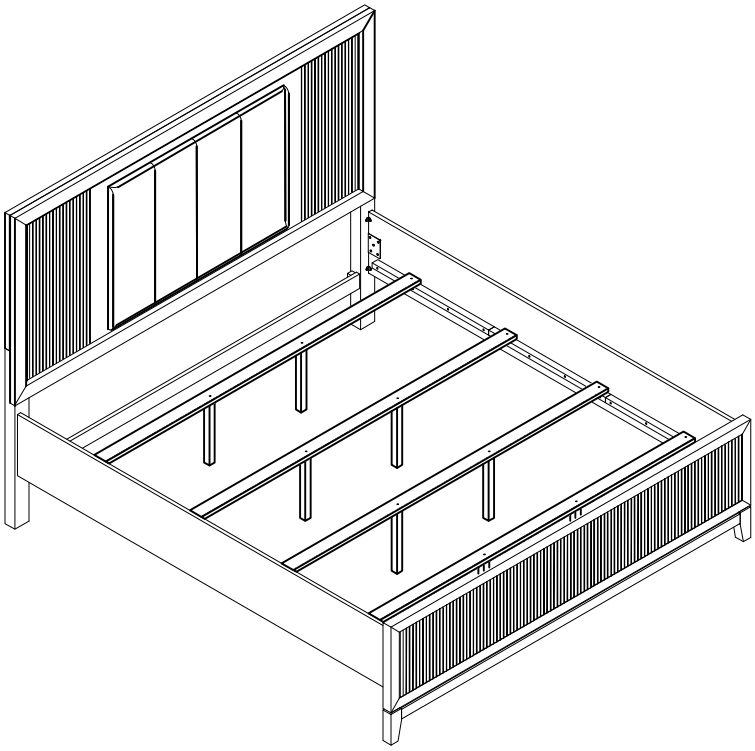

TOOLS REQUIRED

Allen Wrench

(Included)

Phillips Screwdriver

(Not Included)

2 - People Recommended

ASSEMBLY RATING

EASY ———— DIFFICULT

The Assembly Rating is a 5-point system showing the level of effort needed to assemble a specific product.

PRE ASSEMBLY INTRODUCTION

We understand building ready-to-assemble furniture can be a challenging experience for some. To help avoid confusion, we have provided some helpful tips that may speed up the process.

Teamwork

ALWAYS have at least two people to help with transporting and assembling the product to avoid potential injury and/or damage.

Suitable Location

Assembling near the area of the intended location is highly recommended.

Sufficient Space

Make sure you have enough space to move around during the assembly.

Avoid Scratches

Use cardboard, blankets or a carpeted area while assembling furniture to prevent scratches.

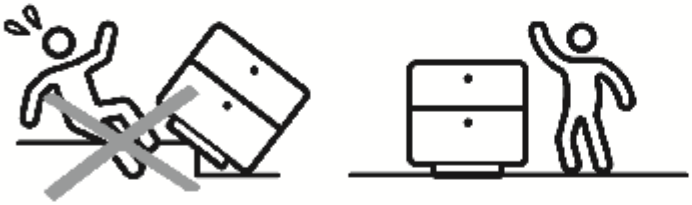

Flat Surface

Make sure the furniture rests on a flat and level surface with each leg evenly touching the floor.

ASSEMBLY AND CARE ADVICE

FAILURE TO FOLLOW THE GUIDELINES BELOW MAY RESULT IN INJURY AND/OR PROPERTY DAMAGE.

Position each part correctly and insert screws or bolts into their respective holes.

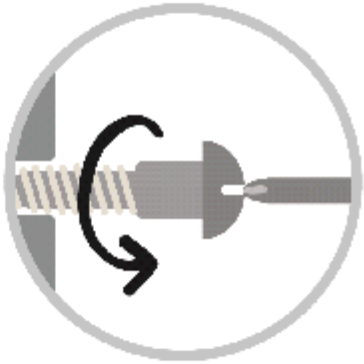

Turn clockwise to tighten and only tighten when step is completed or when instructed to do so.

Use the appropriate hand tools or power tools for assembly. Select steps, such as tightening screws and/or bolts, may require hand tools to avoid causing damage during assembly.

Save the instructions and store any supplied tools for later maintenance.

After two weeks, check and tighten any loose hardware and repeat again every six months thereafter.

IT IS THE USER'S RESPONSIBILITY TO MAINTAIN THE FURNITURE. THE HARDWARE MAY LOOSEN OVER TIME AND MAY CAUSE THE FURNITURE TO BE WOBBLY AND UNABLE TO SUPPORT ITS INTENDED WEIGHT CAPACITY. THIS MAY LEAD TO COLLAPSE AND MAY CAUSE SERIOUS INJURY.

BED

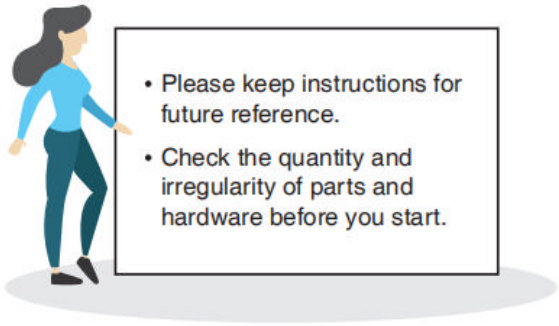

PARTS

#1 1pc

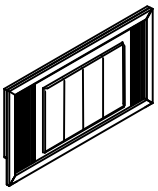

Headboard

#2 2pcs

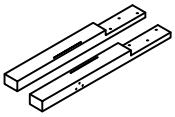

Headboard Post L/R

#3 1pc

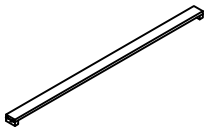

Headboard Cross Bar

#4 1pc

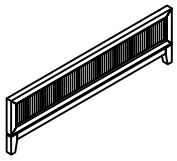

Footboard

#5 4pcs

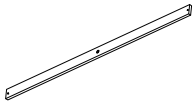

Slat

#6 8pcs

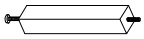

Support Leg

#7 2pcs

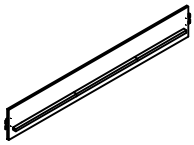

Side Rail

HARDWARE

#A 8 pcs

Bolt
5/16"X 1-3/4"

#B 8 pcs

Spring Washer
5/16"

#C 8 pcs

Flat Washer
5/16"

#D 1 pc

Allen Key 4mm

#G 8 pcs

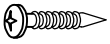

Crew 4* 1-1/8"

#H 8 pcs

Angle Iron

#I 16 pcs

Crew 4* 6/8"

packed in 3 cases

	Disignation	Part		Hardware
	Headboard Panel	#1	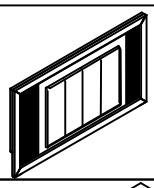	#A x 8pcs #B x 8pcs #C x 8pcs #D x 1pc
	Headboard leg (L-R)	#2	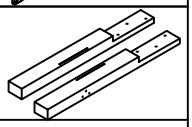	
	Headboard Cross Bar	#3		
	Footboard	#4	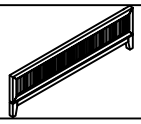	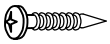 #G x 8pcs #H x 8pcs #I x 16pcs
	Slats	#5		
	Slats Surpport legs	#6	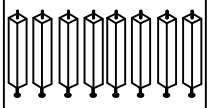	
	Side Rails	#7		

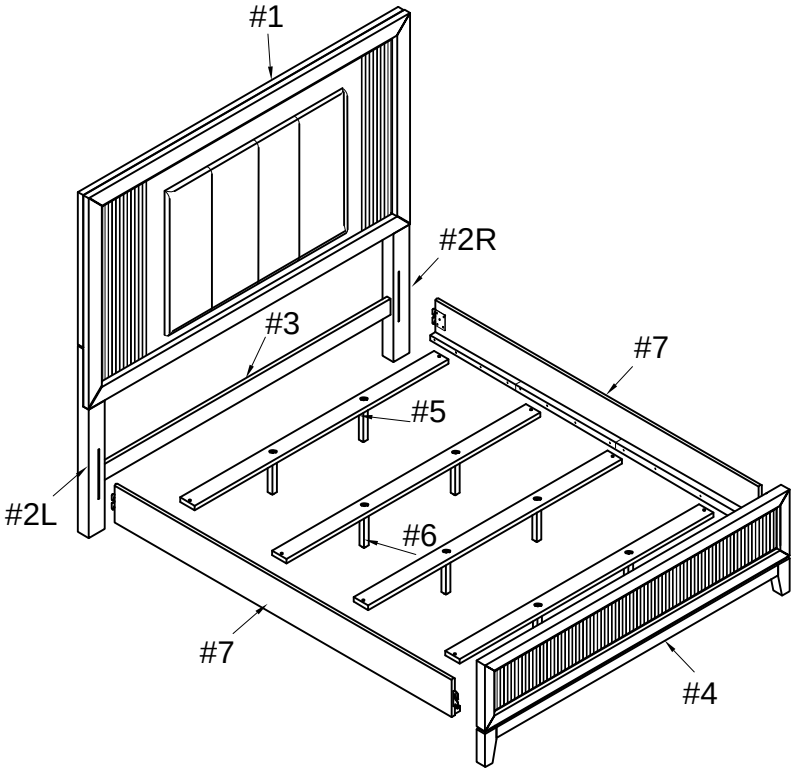

ASSEMBLY INSTRUCTIONS

1

Part #1 x1pc
#2 x2pcs
#3 x1pc

Hardware
#A X 8pcs
#B X 8pcs
#C X 8pcs
#D X 1pc

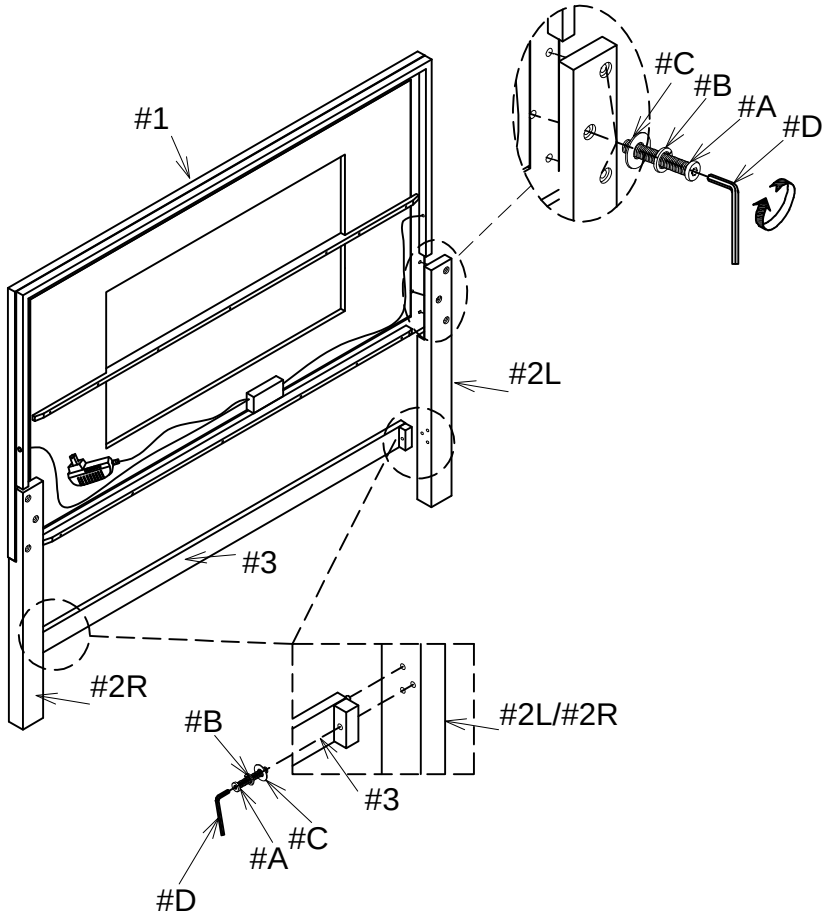

2

Part #1 x1pc
#4 x1pc
#7 x2pcs

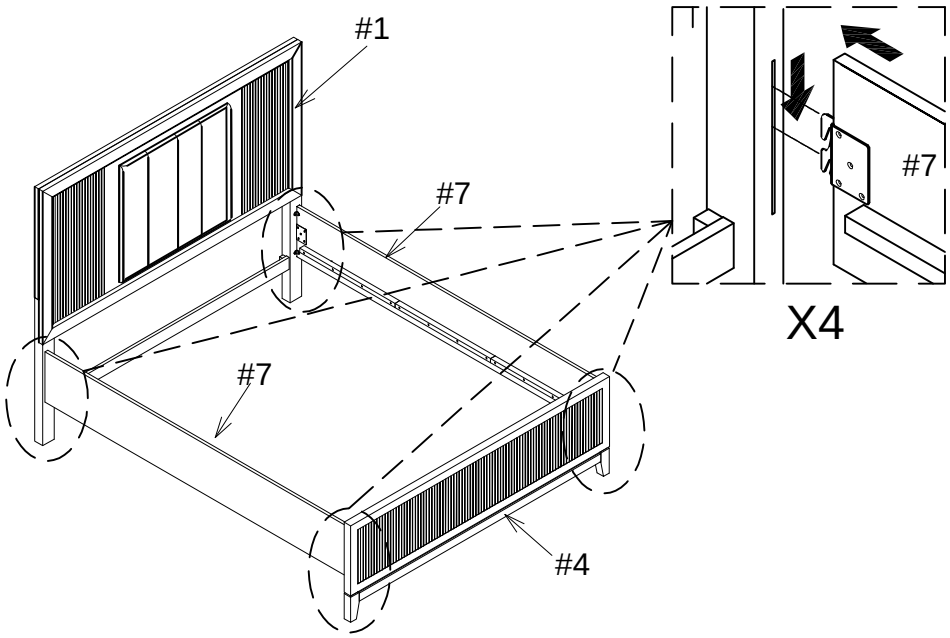

ASSEMBLY INSTRUCTIONS

3

Part #5 x4pcs
#6 x4pcs

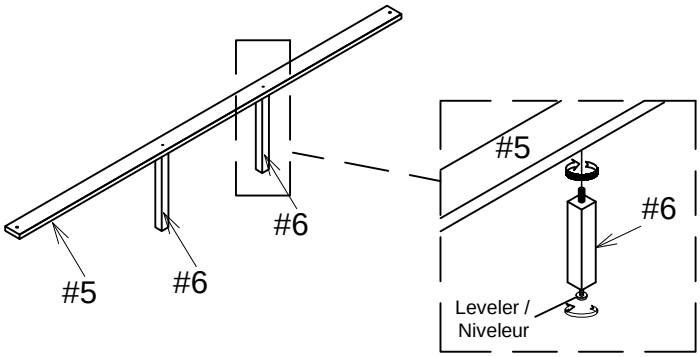

4

Hardware
#G X 8pcs
#H X 8pcs
#I X 16pcs

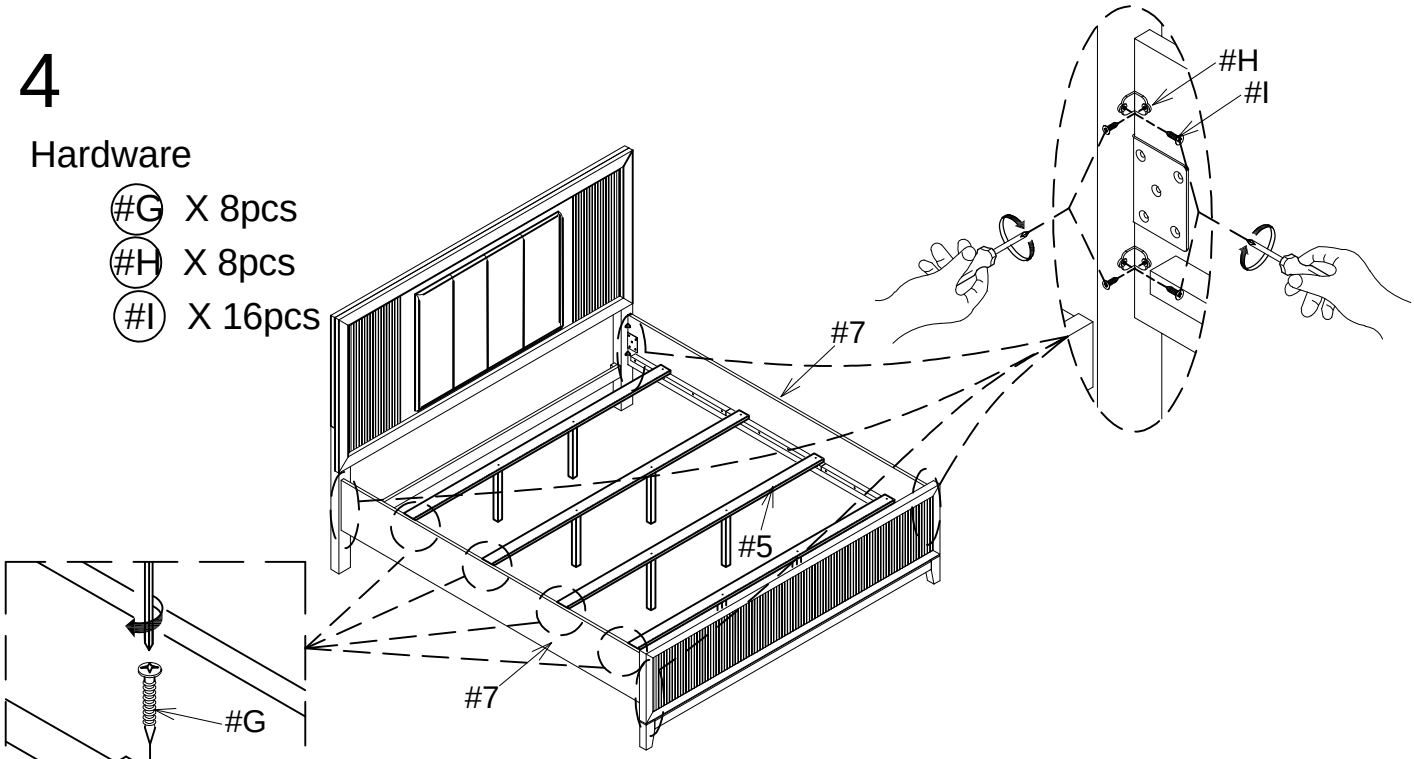

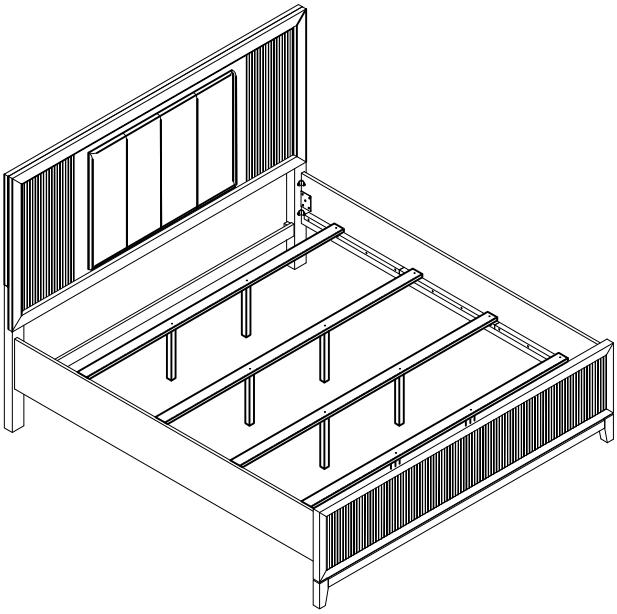

ASSEMBLY COMPLETED

Please ensure the furniture rests on an even and flat surface. If the product wobbles or feels loose, double-check all bolts and/or screws are properly tightened and secured.

Keep this handy!

Please retain this instruction manual and any order-related information for future reference.

Lift, don't drag!

To avoid damage to product please always LIFT the product when transporting of adjusting the placement.

ASSEMBLY INSTRUCTIONS

Wall Mounting and Fixing

EXPANSION WALL ANCHOR

Our provided expansion wall anchors are only suitable for masonry walls, such as drywall, plaster or concrete, and are best for holding lightweight items or for anti-tip prevention. If you are unsure of the correct wall anchor to use with the product, please request professional guidance. liability for product damage or failure due to using the incorrect anchors will fall on the installer.

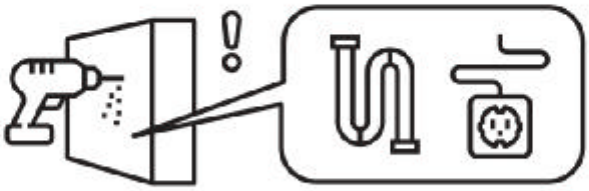

CHECK BEFORE PROCEEDING

Prior to drilling or hammering, please check for wires or pipes. We recommend using a stud finder to locate a stud, which will offer more appropriate resistance and hold more weight.

QUICK TIPS

1.If unsure of the proper size, always choose a larger screw and wall anchor.

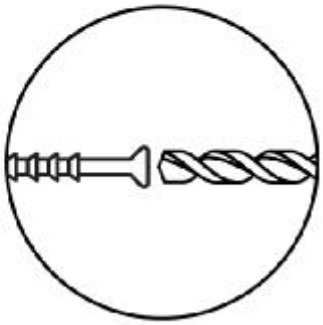

2. Match the drill bit to the wall anchor and hole size.

3. Only drill horizontally. Do not force the drill or enlarge the hole for the wall anchor.

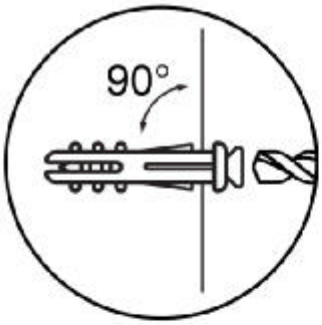

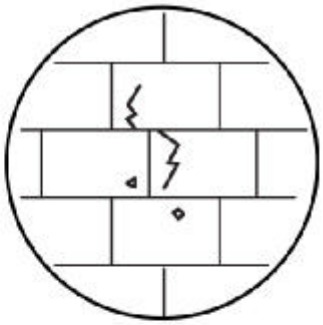

4. Take extra care when drilling into high walls or ceramic tiles. Wall anchors should be a tight fit for the hole. Never use wall anchors in ceilings.

MAINTENANCE

We recommend a yearly check to see if the wall anchor or screw has loosened. If so, please remove the existing wall anchor and screw, and use a new anchor.