ASSEMBLY INSTRUCTIONS

Please read the instructions carefully before assembly and keep it for future reference.

TWO PERSONS AND TOOLS REQUIRED

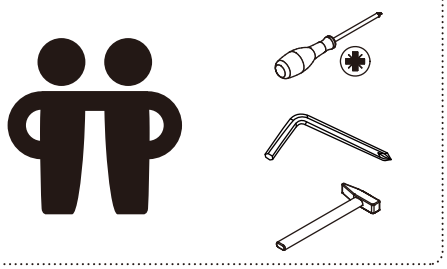

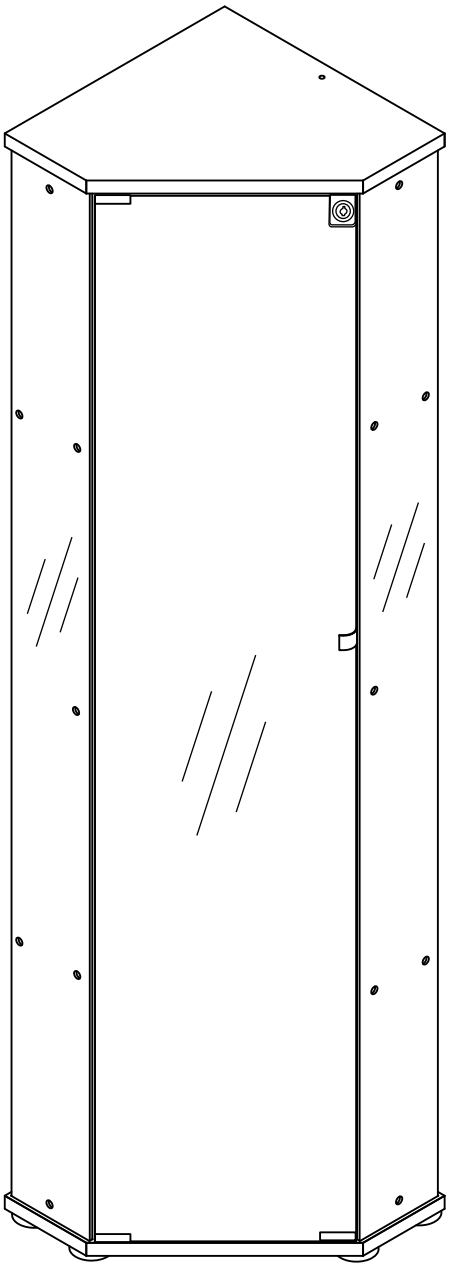

GLASS DISPLAY CABINET

Model: US-DC003

Version 1.0

Important Information

1. **Tempered glass has a 0.3% probability of self-breakages.** Please wear gloves, long sleeved shirt, trousers and proper socks and footwear during the assembly process to avoid possible injury in case of accidents.

2. **To avoid possible accidents, do not let children approach during the assembly process.** The assembly process requires two adults to carry out.

3. During the assembly process, please use cardboards or carpets as buffer layers to isolate the possibility of collision between the glass corners and hard objects such as the ground. To prevent any self-breakages of the tempered glass due to stress changes, please do not let the glass corners hit the ground during the assembly process.

4. **On completion of the cabinet assembly, be sure to install the anti-tipping kit to prevent serious or fatal injury.** In order to prevent tipping over, the cabinet must be permanently connected to the wall. (You may use the supplied anti-tipping kit or any other similar device to attach the cabinet to the wall.)

5. **The cabinet should only be used by adults.** Children should stay clear of the cabinet to avoid any accidents caused by cabinet door opening and closing, or falling objects.
   It is recommended that children should be at least 2m away from the cabinet and an anti-tipping kit and cabinet door lock be installed for added safety.

6. The maximum weight capacity of each cabinet shelf is **5kg** and the overall maximum weight capacity of the cabinet is **25kg**. Do not overload the cabinet beyond these weight capacities.



IMPORTANT INFORMATION!

please read the entire manual before starting to assemble and/or using this product.follow the manual thoroughly and keep it for further reference.

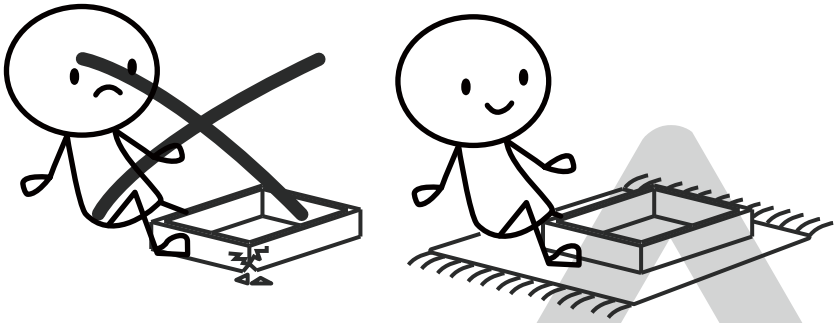

AVOID SCRATCHES!

In order to avoid scratching this furnuture should be assembled on a soft layer-could be a rug.

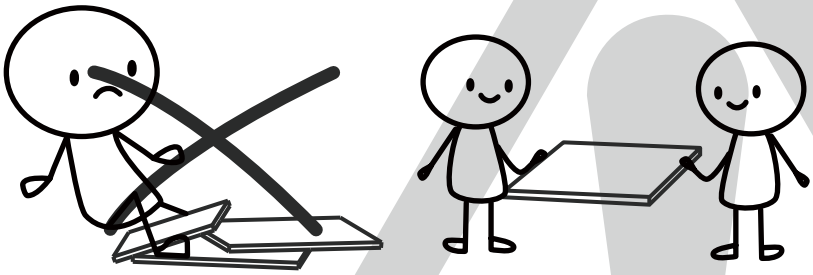

IMPROVE EFFICIENCY !

Try to find a partner to install with you, which can speed up the installation efficiency and shorten the time.

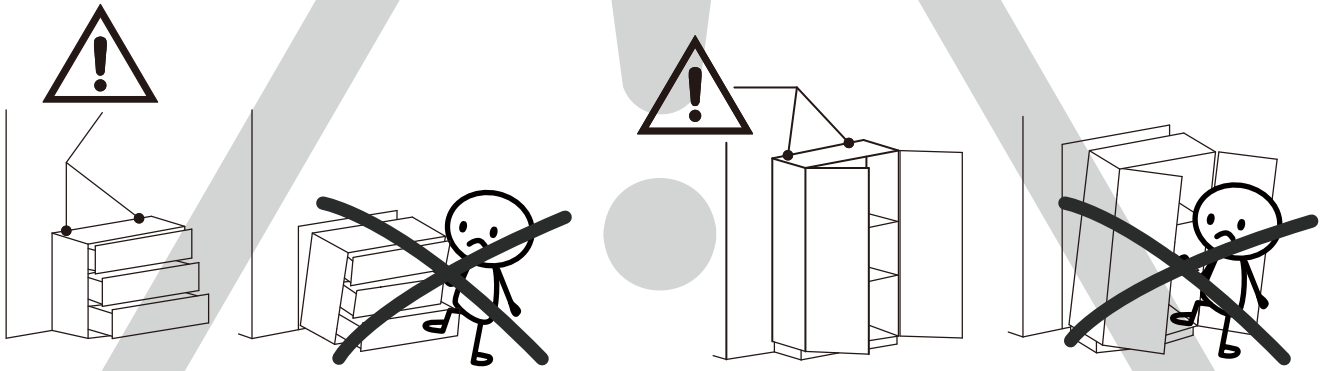

ANTI-TOPPLE WARNING !

Overturned furniture can cause serious or fatal crush injuries. To prevent tipping over, be sure to use the wall attachment, if not included with this product. Please purchase the wall attachment that fit your wall. If unsure, seek professional advice. Please read and follow each step of the instructions carefully.

IMPORTANT !

It is important that any product which is assembled using any kind of screw is re-tightened 2 weeks after assembly,and once every 3 months - in order to assure stability through-out the lifespan of the product.

For regular maintenance and cleaning of the product, for the frame, please use a rag dipped in neutral detergent to fully wipe it, and then dry it with a clean rag.For glass materials, wipe with a rag dampened with water glass cleaner, and then dry with a dry rag.

Do not use an electric screwdriver, and do not use too much force when installing, because the board is easy to break.

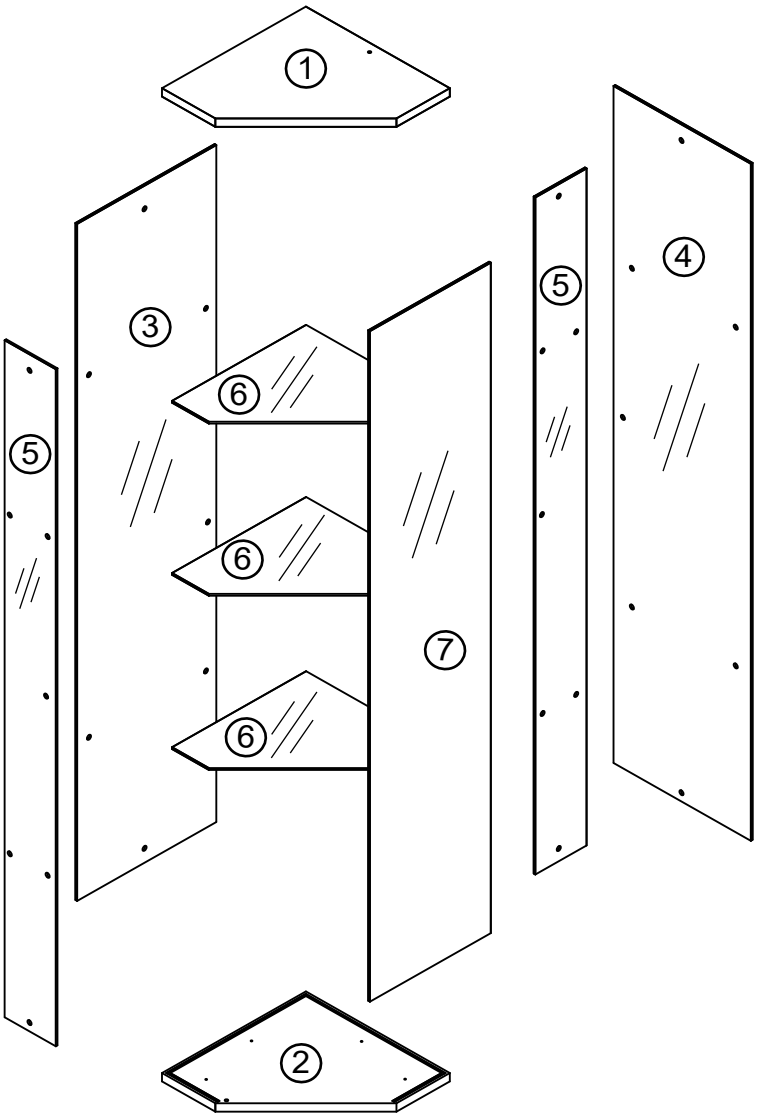

Ⓐ X18 M4x20mm	Ⓑ X12 M6x16mm	Ⓒ X16 M6x10mm	Ⓓ X15+1	Ⓔ X28	Ⓕ X1 M4
Ⓖ X12+1	Ⓗ X28	Ⓘ X1	Ⓙ X1	Ⓚ X2	Ⓛ X2
Ⓜ X1	Ⓝ X18	Ⓞ X5	Ⓟ X1	Ⓠ X1	Ⓡ X1
Ⓢ X2 M3x16mm	Ⓣ X1	Ⓤ X 1 U1 U2	Ⓥ X1		

Ⓦ

M4x16mm	Φ16x1mm		M4x40mm
W1	W2	W3x2	W4	W5

1	R x 1	S x 2	V x 1		F x 1

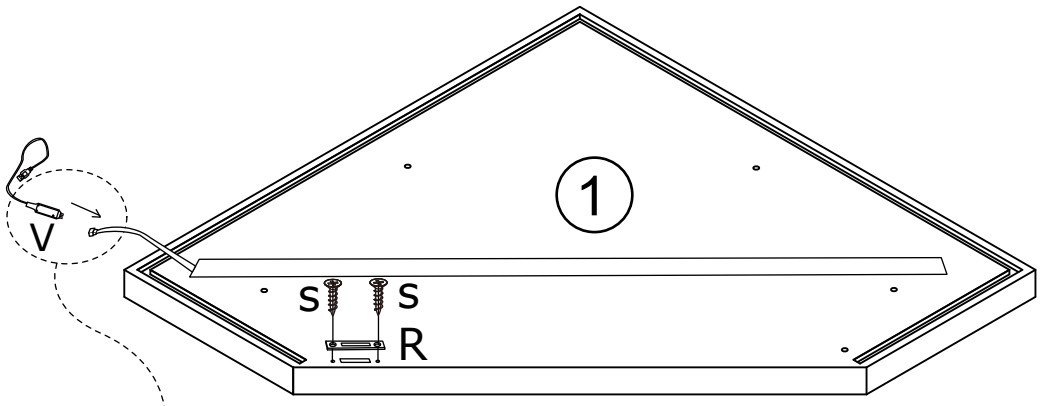

As shown in the figure, insert the port in the direction indicated by the aligned arrow.

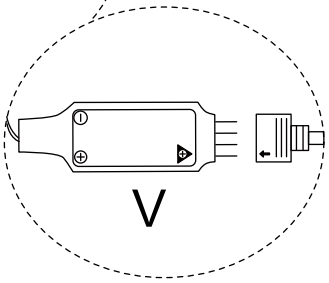

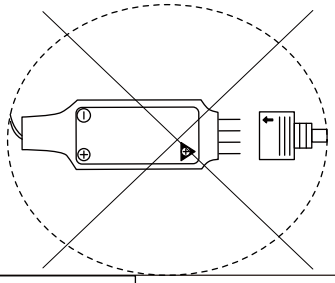

2	A x 10	O x 5	T x 1		F x 1

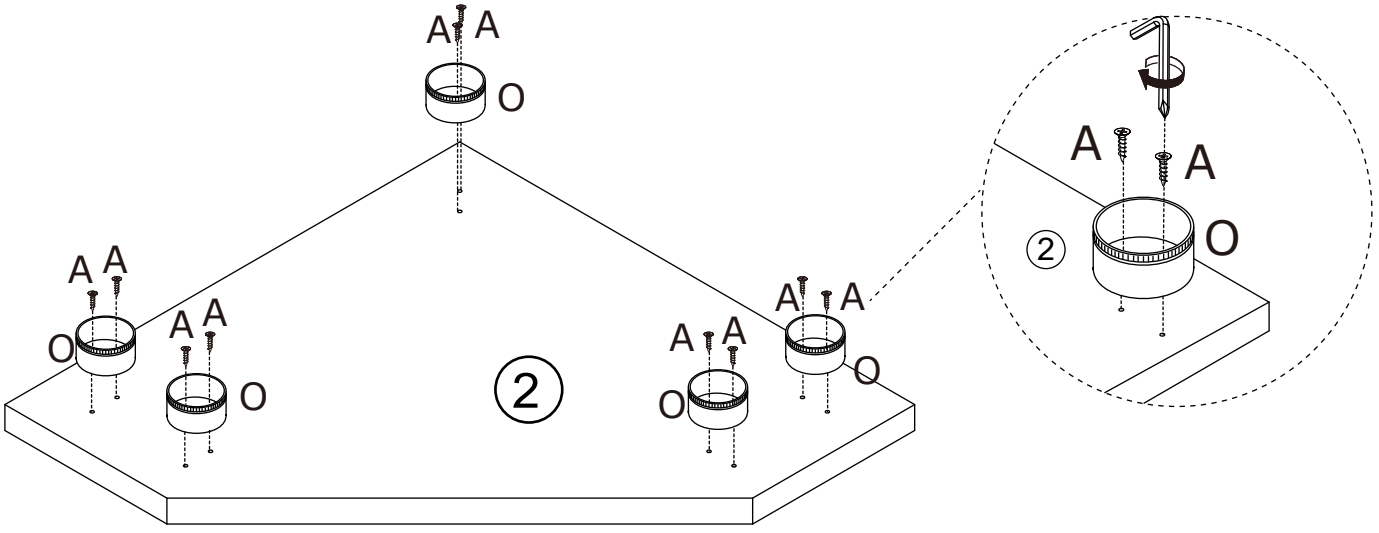

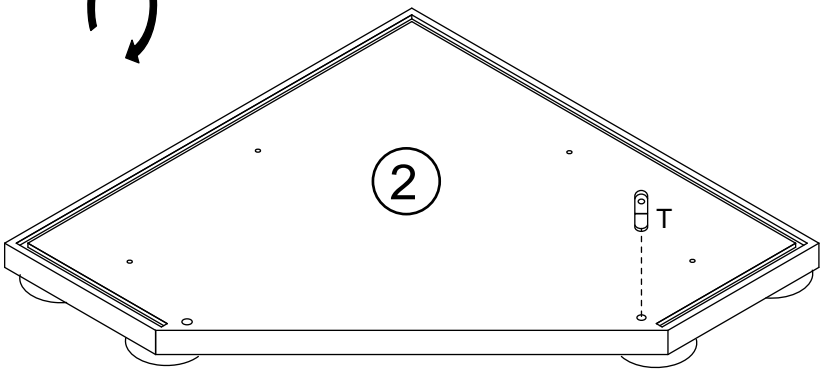

3

C x 8 | D x 8 | E x 8 | H x 8 | F x 1

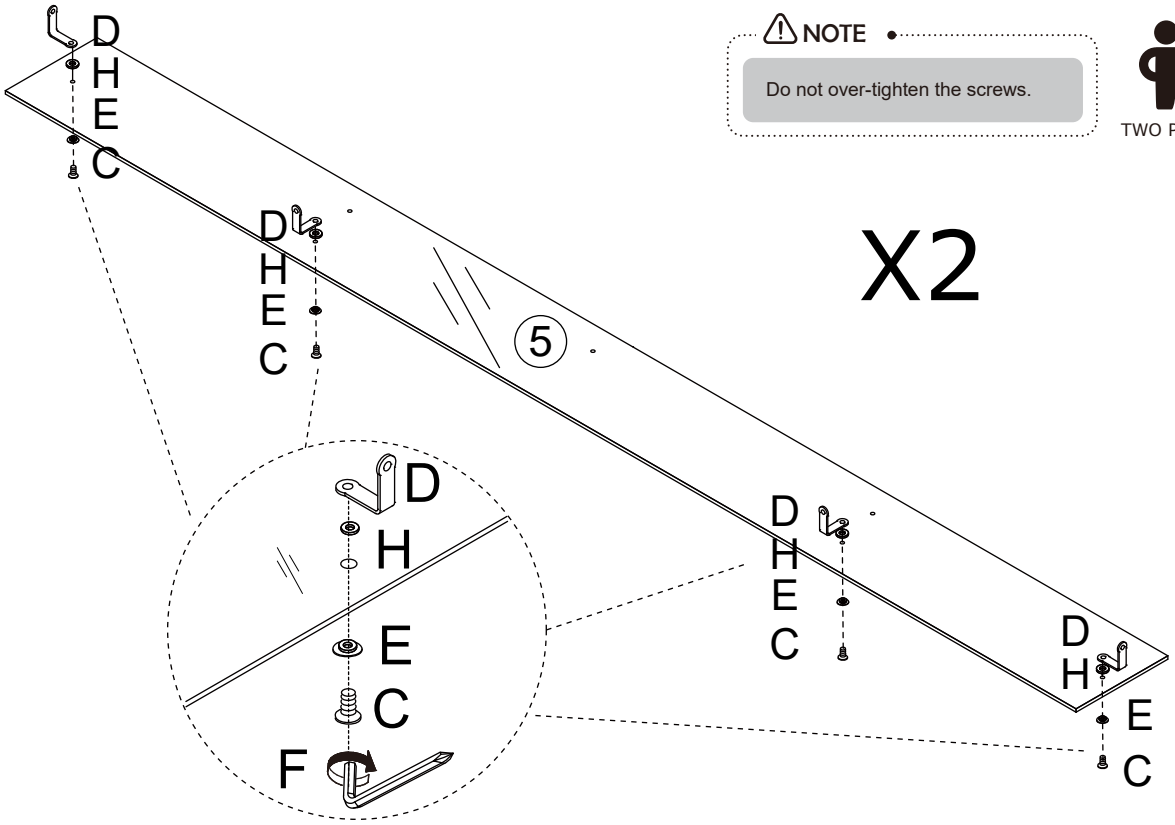

4

B x 3 | C x 2 | D x 5 | E x 5 | G x 3 | H x 5 | F x 1

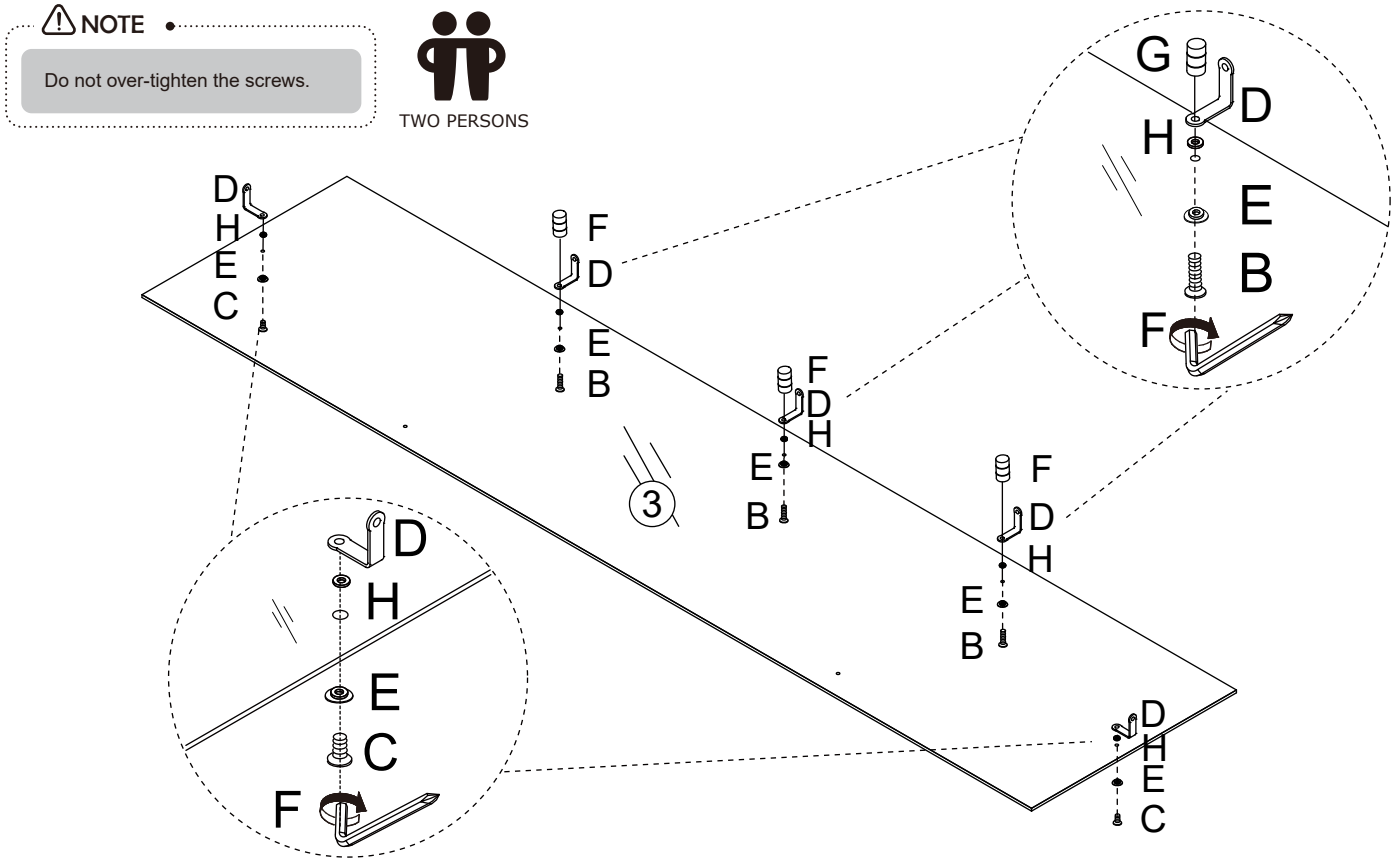

5

C x 2 

D x 2 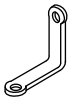

E x 2 

H x 2 

F x 1 

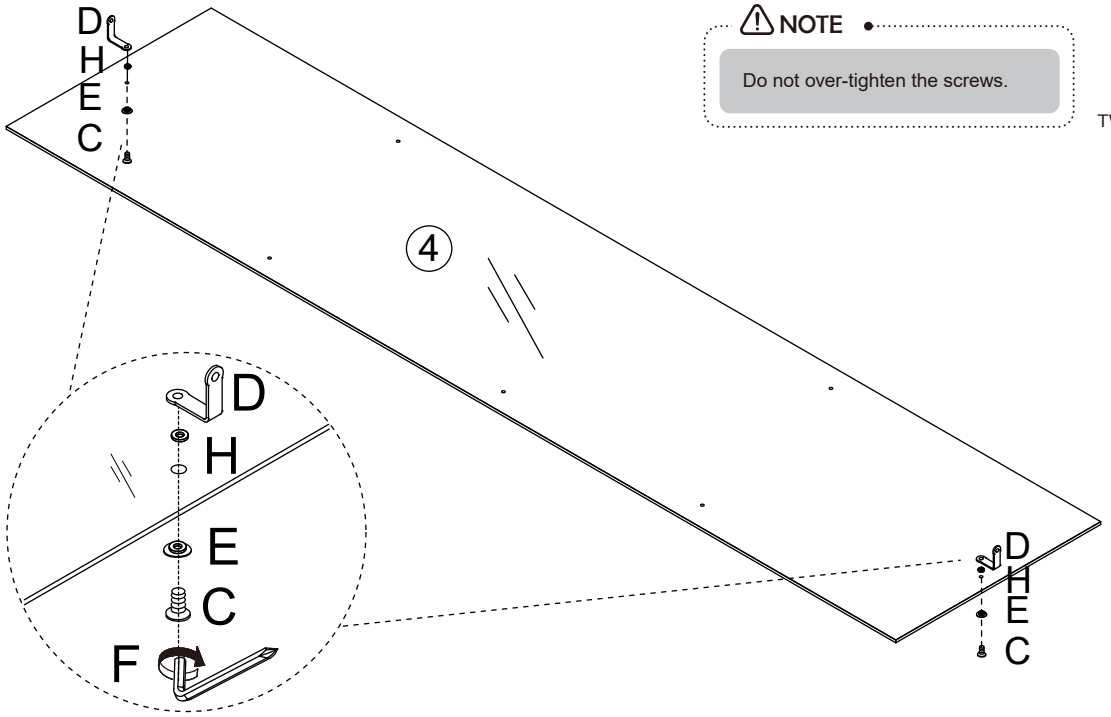

NOTE

Do not over-tighten the screws.

TWO PERSONS

6

A x 2 

F x 1 

NOTE

Do not over-tighten the screws.

TWO PERSONS

Someone needs to hold the glass **3** steady to prevent it from tipping over.

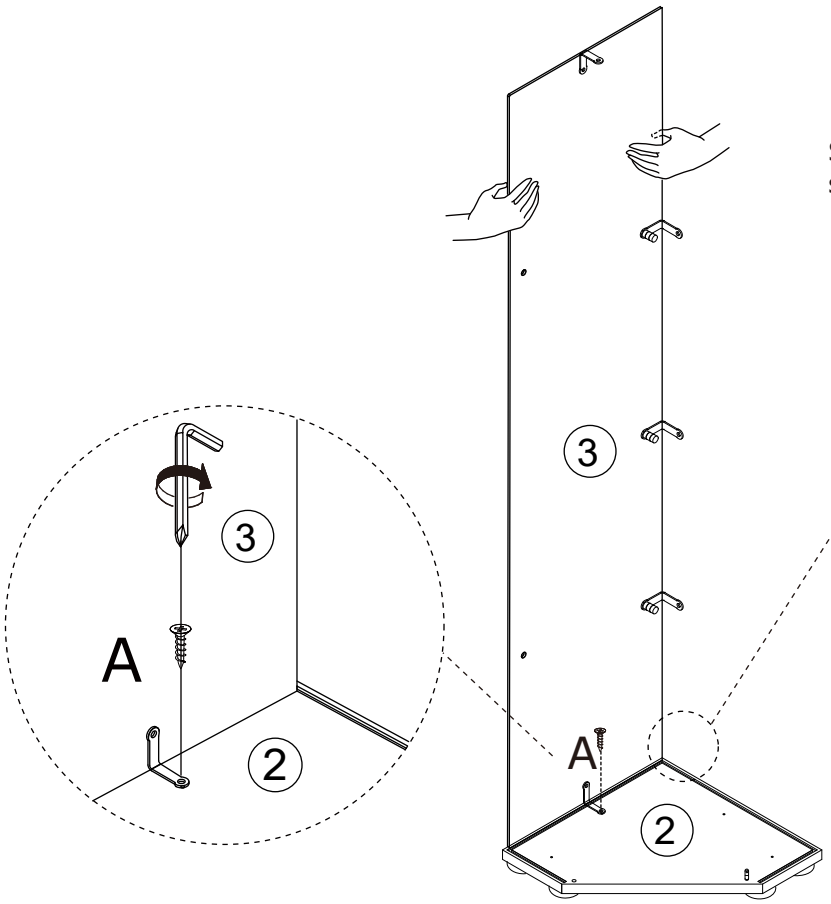

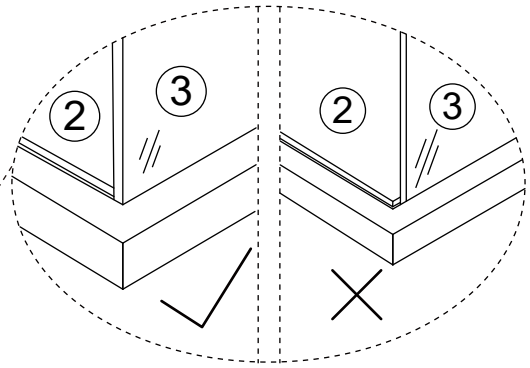

7

A x 1	B x 3	E x 3	G x 3	H x 3		F x 1
						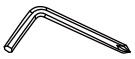

NOTE

Do not over-tighten the screws.



TWO PERSONS

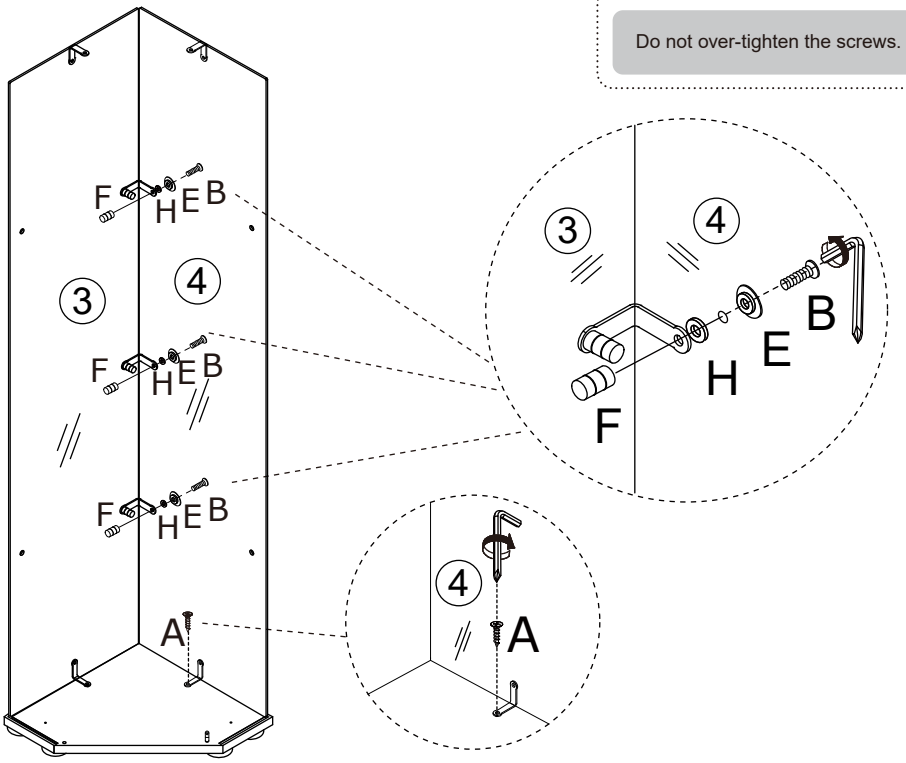

8

A x 1	C x 2	E x 2	H x 2		F x 1
					

NOTE

Do not over-tighten the screws.



TWO PERSONS

9

A x 1 

C x 2 

E x 2 

H x 2 

F x 1 

NOTE

Do not over-tighten the screws.

TWO PERSONS

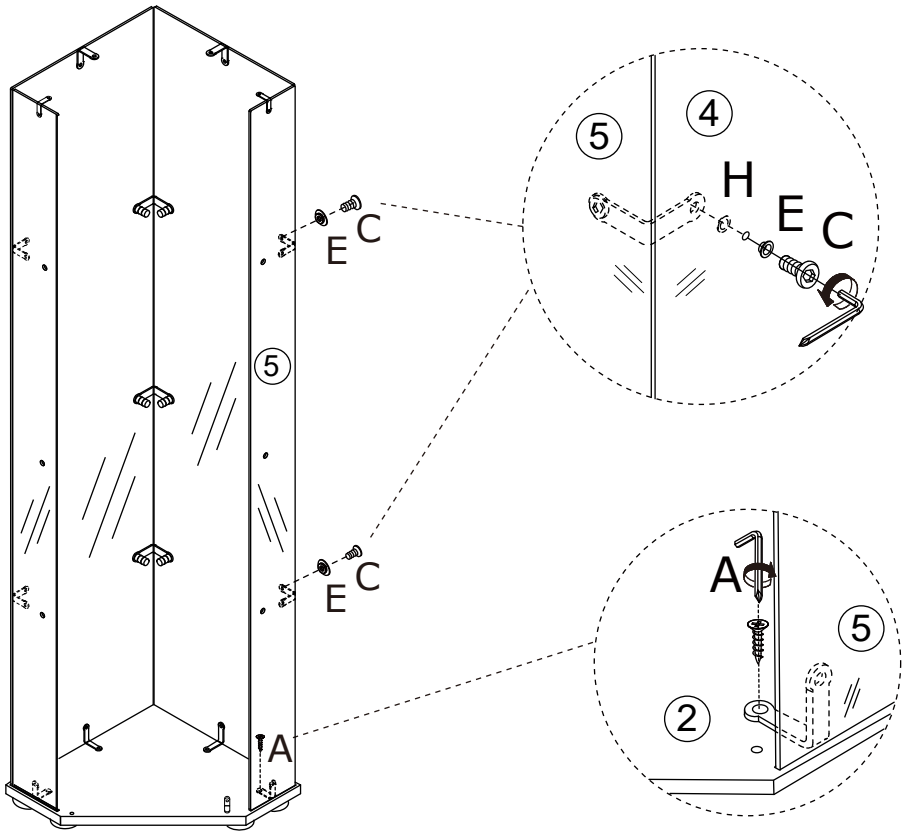

10

A x 4 

F x 1 

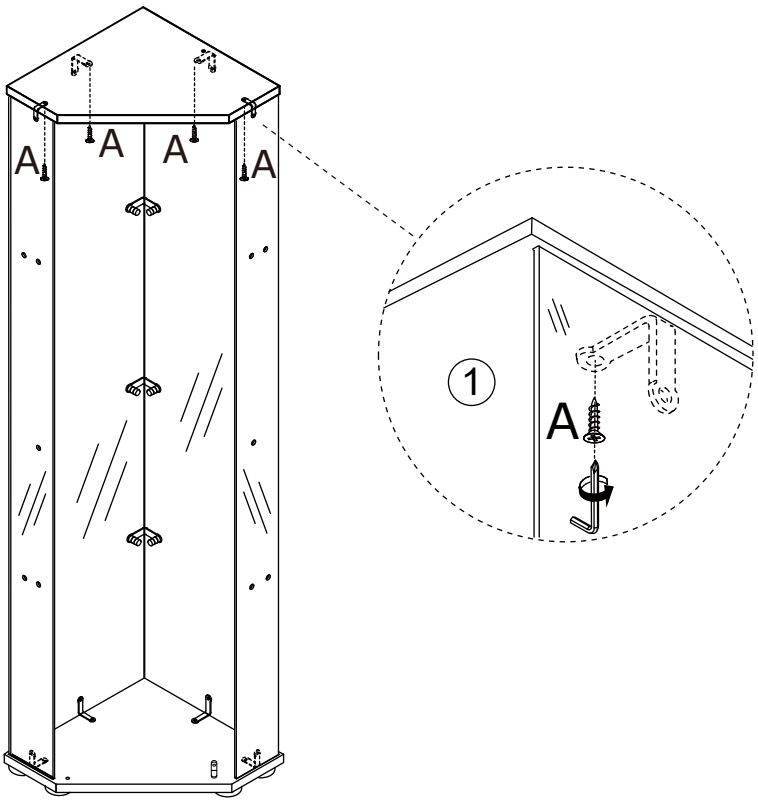

11

B x 6



E x 6

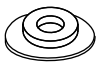

F x 6



H x 6



F x 1



NOTE

Do not over-tighten the screws.



TWO PERSONS

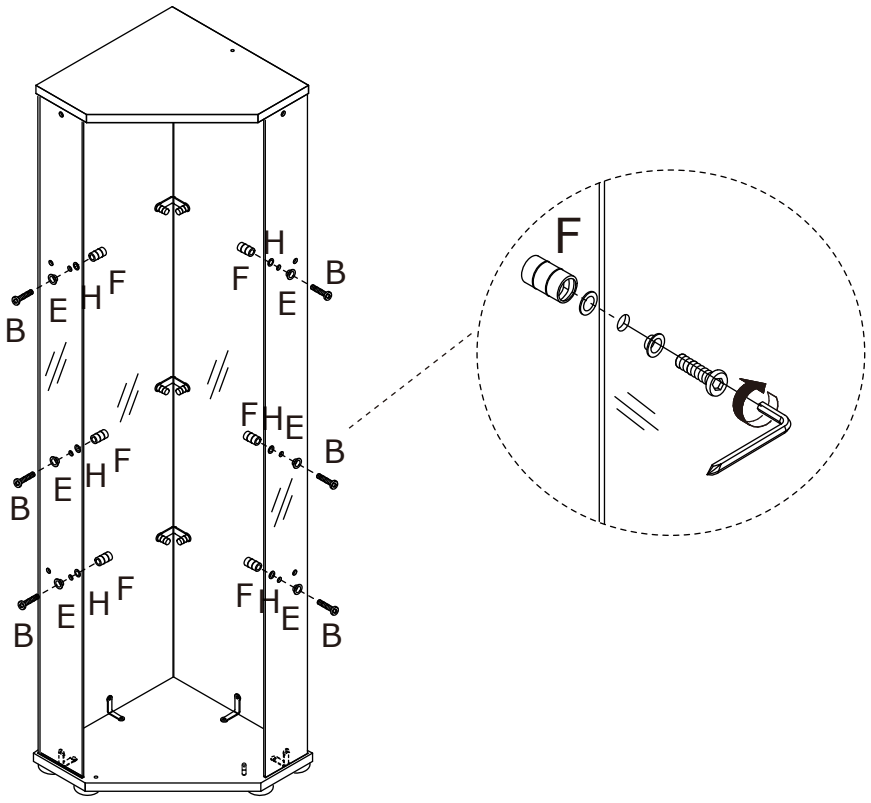

12

N x 18



F x 1



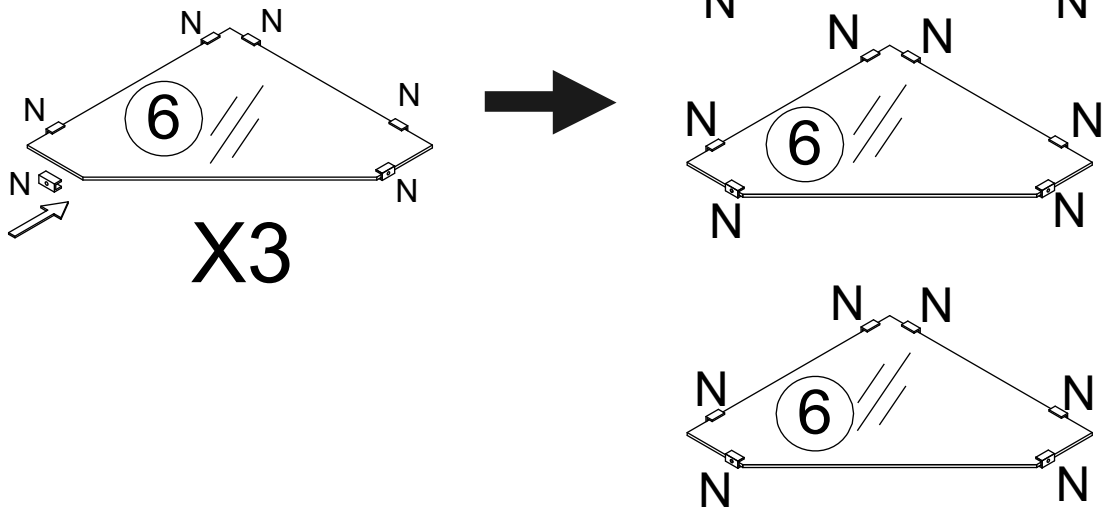

13

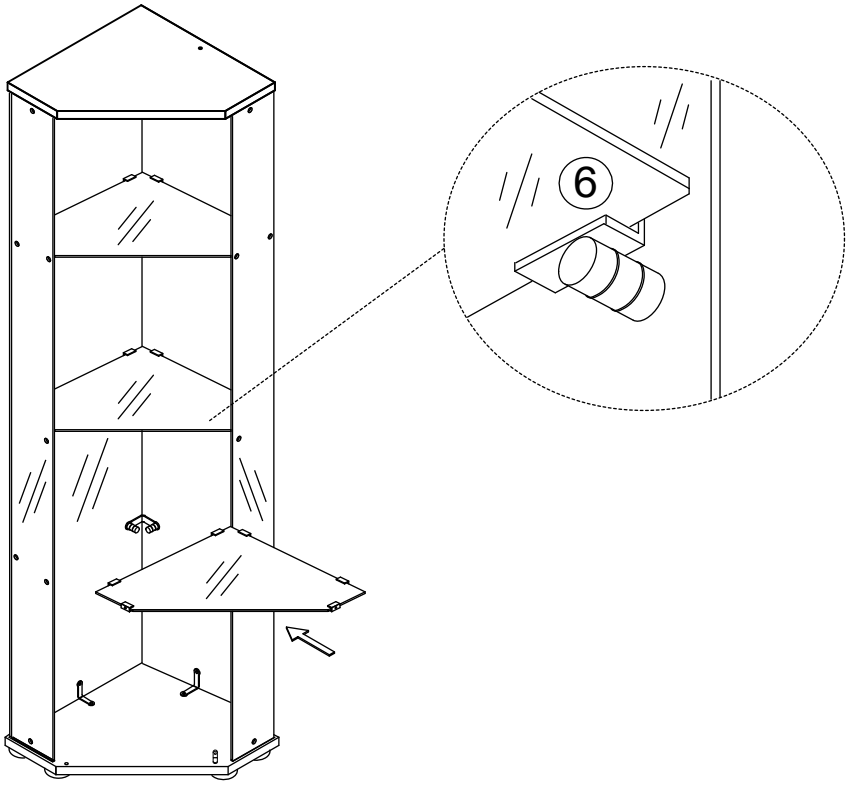

14

I x 1	L x 1	U1 x 1	U2 x 1		F x 1
					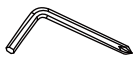

NOTE

Do not over-tighten the screws.

TWO PERSONS

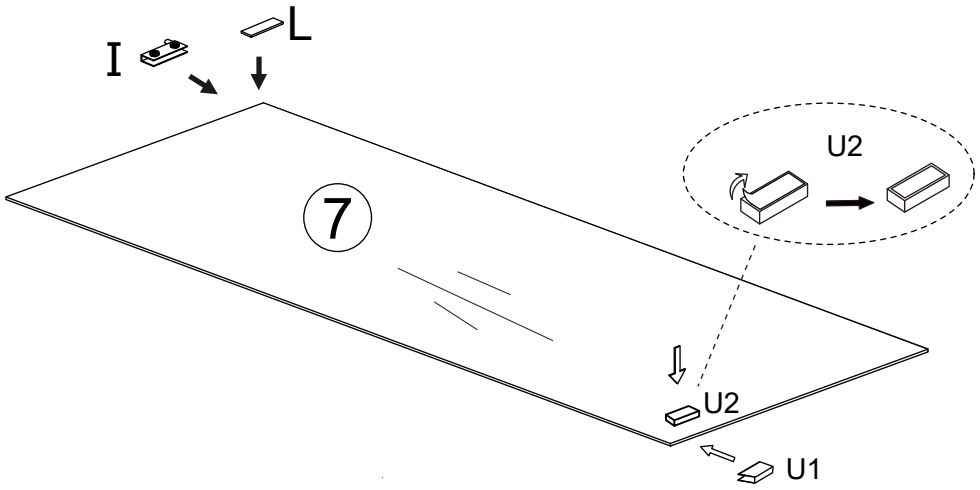

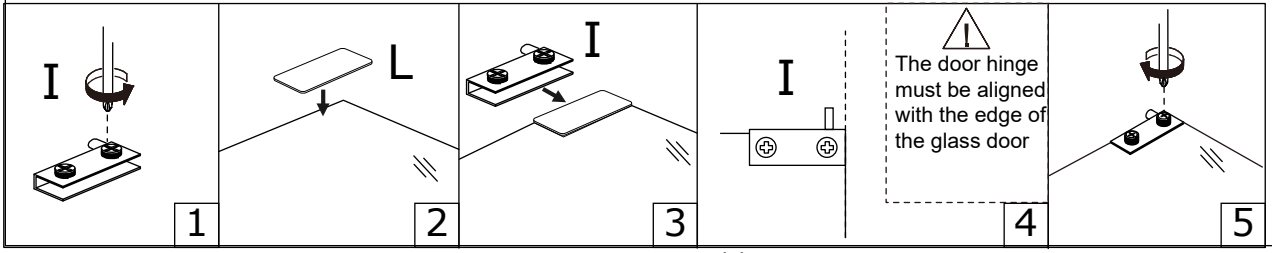

15

J x 1



K x 1



F x 1



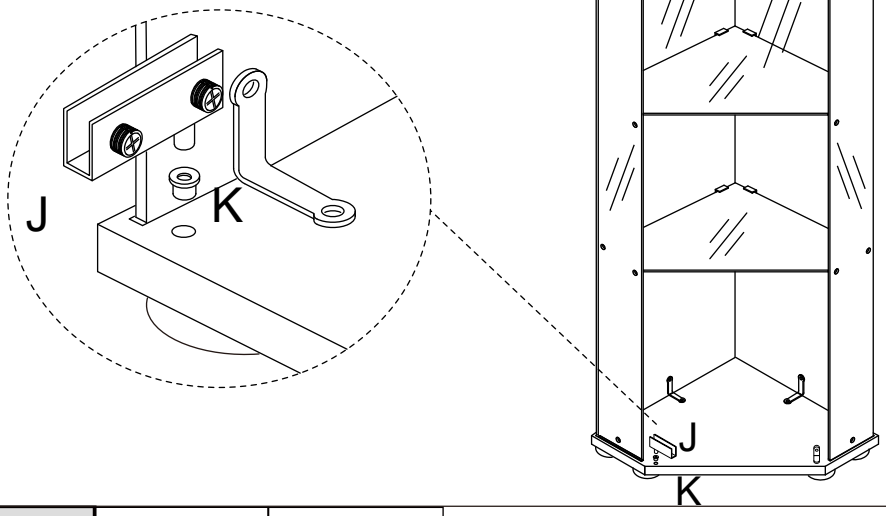

16

L x 1



K x 1



F x 1



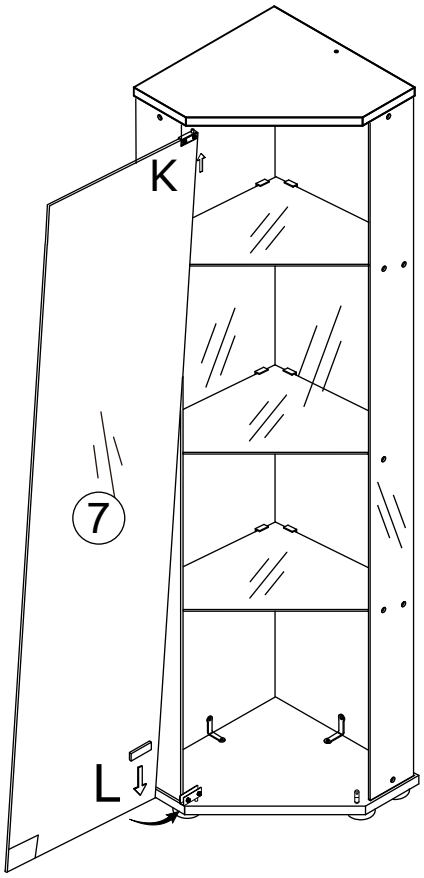

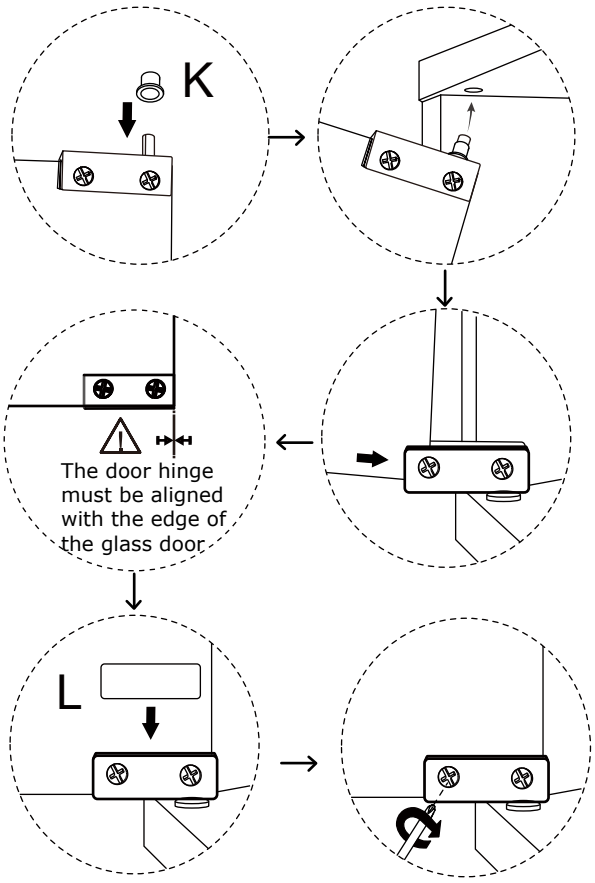

17

P x 1



Q x 1



F x 1



NOTE

Do not over-tighten the screws.

TWO PERSONS

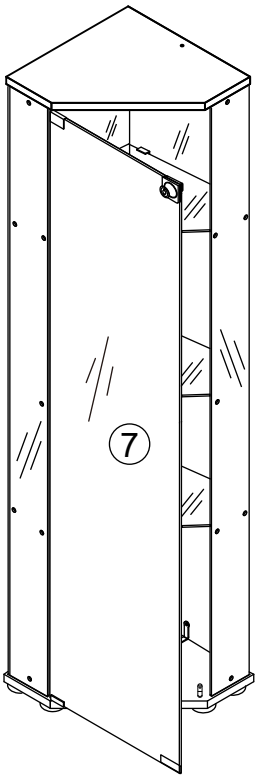

It is necessary to determine the position of the lock, and then tighten the screws for fixation.

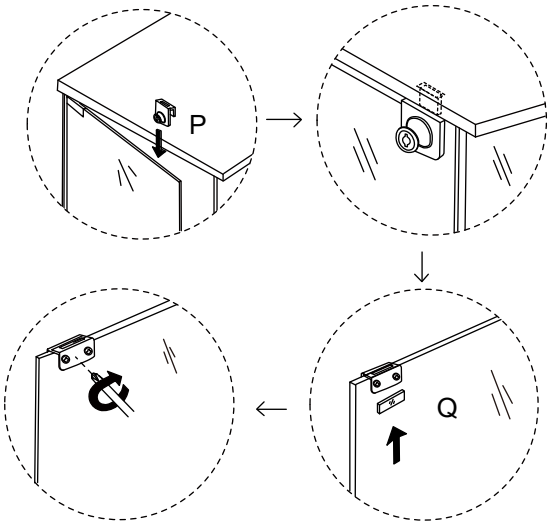

18

M x 1



F x 1



You can choose the location for installing the handle according to your needs.

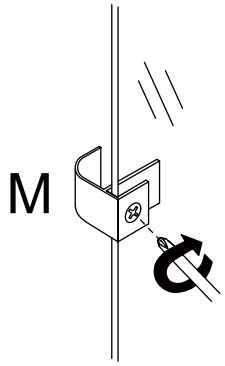

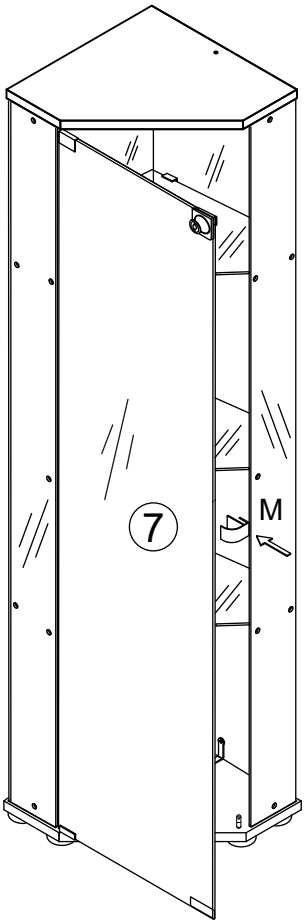

19

F x 1



Hinge Adjustments

If the door panels do not appear square or aligned, loosen or tighten the appropriate screw as illustrated

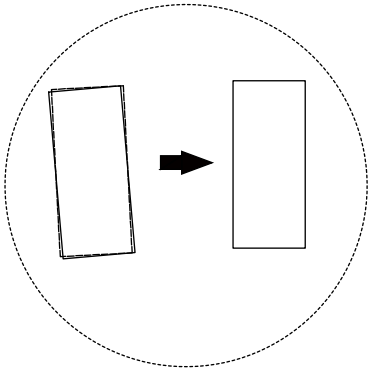

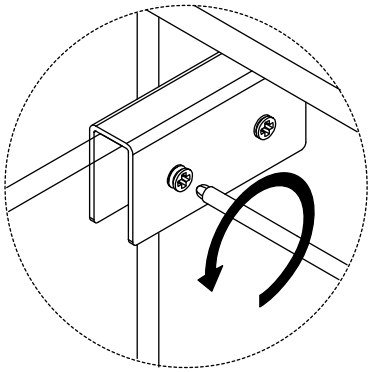

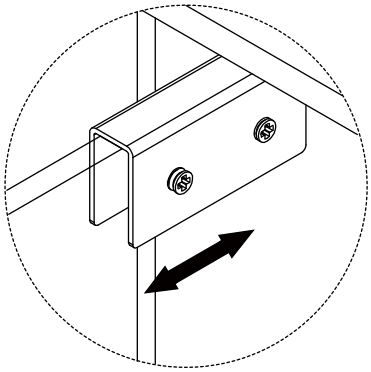

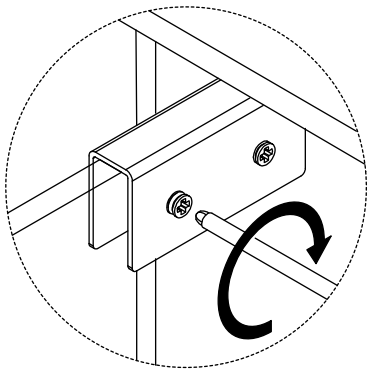



20	W1 x 1	W2 x 1	W3 x 2	W4 x 1	W5 x 1		F x 1





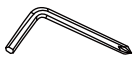

⚠ WARNING


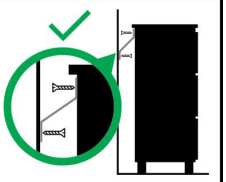

Children have died from furniture tipover.

- ALWAYS secure this furniture with an anchor device.
- NEVER allow children to stand, climb or hang on drawers, or shelves.
- ALWAYS secure your television with an anchor device.

This is a permanent label. Do not remove!

CAUTION:

For your safety when attaching the anchor fixings, please note the following:

-Check for any electrical wires or plumbing inside the wall before drilling anyholes (if you are unsure, please seek professional advice from a qualifiedtradesperson)

-Walls are constructed from different materials, for example, masonry (solidbrick) or plasterboard lined cavity walls (hollow). It is important that you use the appropriate wall fixings for your wall type.

-Your local hardware store will have the necessary drills and fixings and can offer advice if needed. If in doubt, engage the services of a qualifiedtradesperson to install and anchor the product.

Handle with care ! A damaged edge or scratched surface can cause the glass to suddenly crack and/or break.Avoid collisions from the side - this is where the glass is most vulnerable

