Vicllax

INSTALLATION INSTRUCTIONS

Assembly Instructions If you have any questions, please contact E-mail: service@vicllax.com

AL		AR		B		C		D	
*2		*2		*2		*2		*6	
H	M6*15	G		F		E		I	M6*30
*12		*4		*2		*2		*16	
M	M8	L	M6	K	M6*18	J	M8*35	N	M8
*8		*40		*12		*8		*8	
Q	M6	P	M8	O	M6	R	M6 M8		
*1		*8		*12		*2			

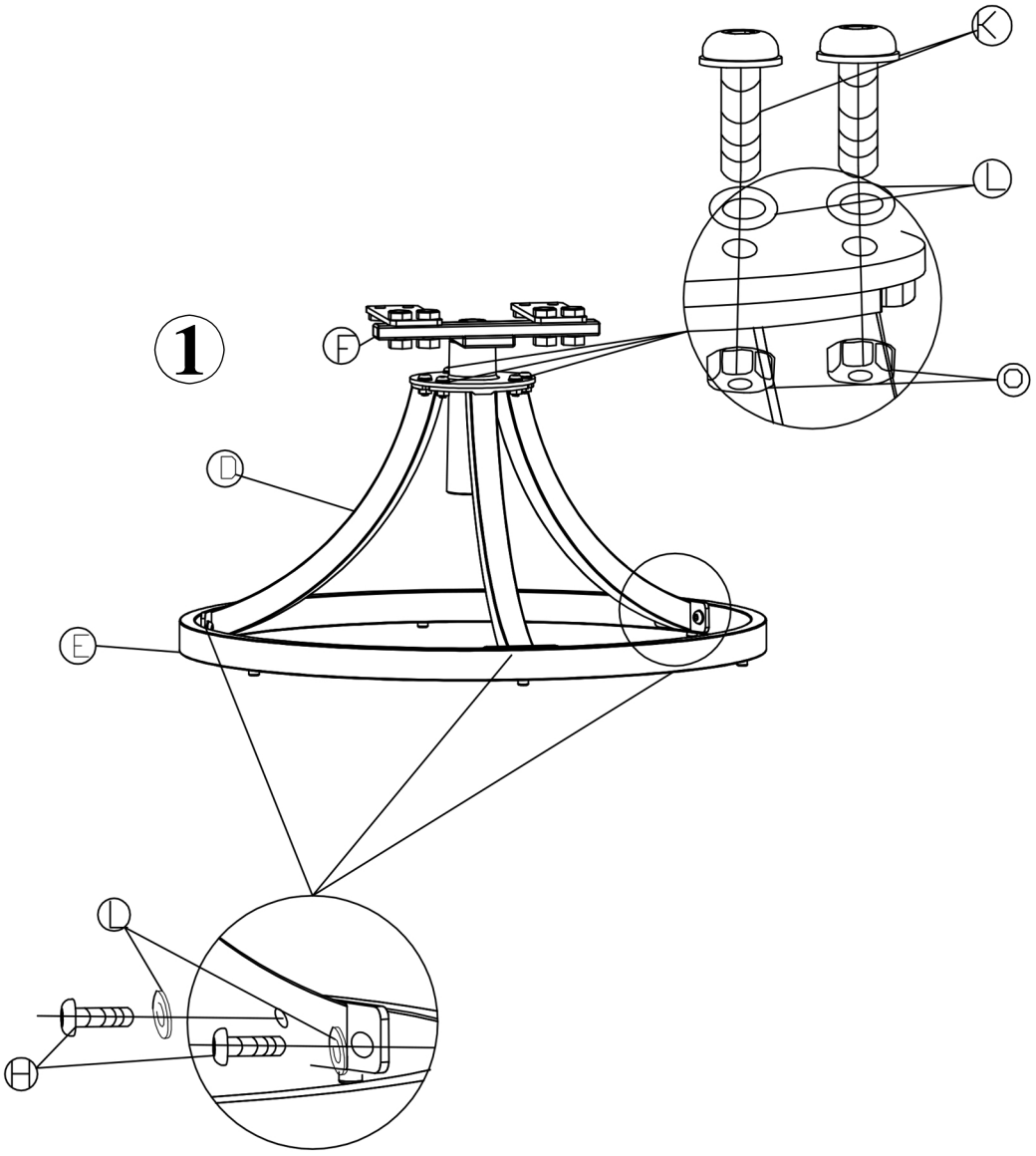

Assembly Instructions If you have any questions, please contact E-mail: service@vicllax.com

Vicllax

INSTALLATION INSTRUCTIONS

Assembly Instructions If you have any questions, please contact E-mail: service@vicllax.com

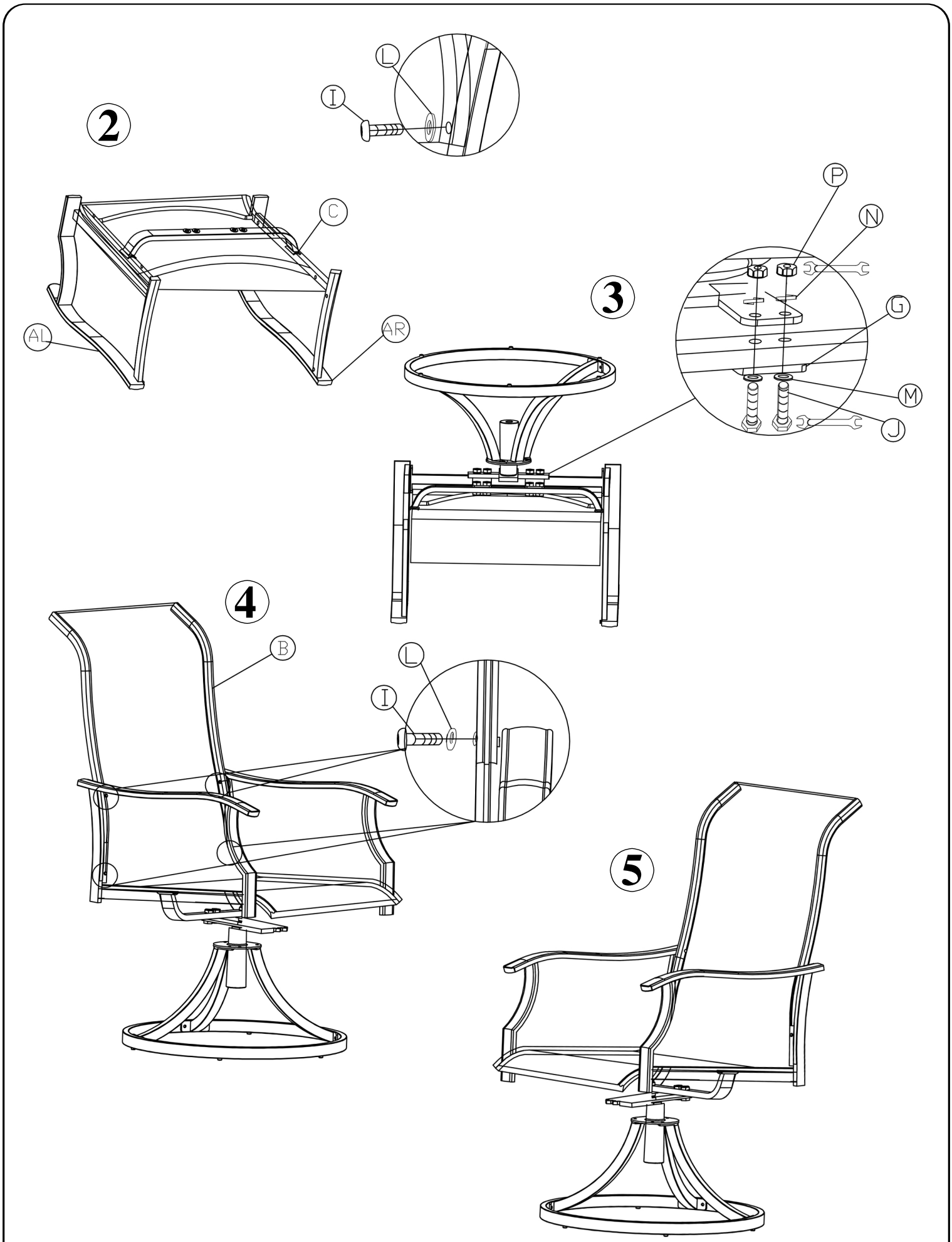

Assembly Instructions If you have any questions, please contact E-mail: service@vicllax.com