CONDRIS
MASSAGE BATHTUB

Installation & Operation Manual

Model: REVIVE
Size: L59”×W59”×H24.8”



Warning

! Please do not lift the bathtub by the glass and stainless steel rim.

CONDRIS

MASSAGE BATHTUB

Configuration Illustration

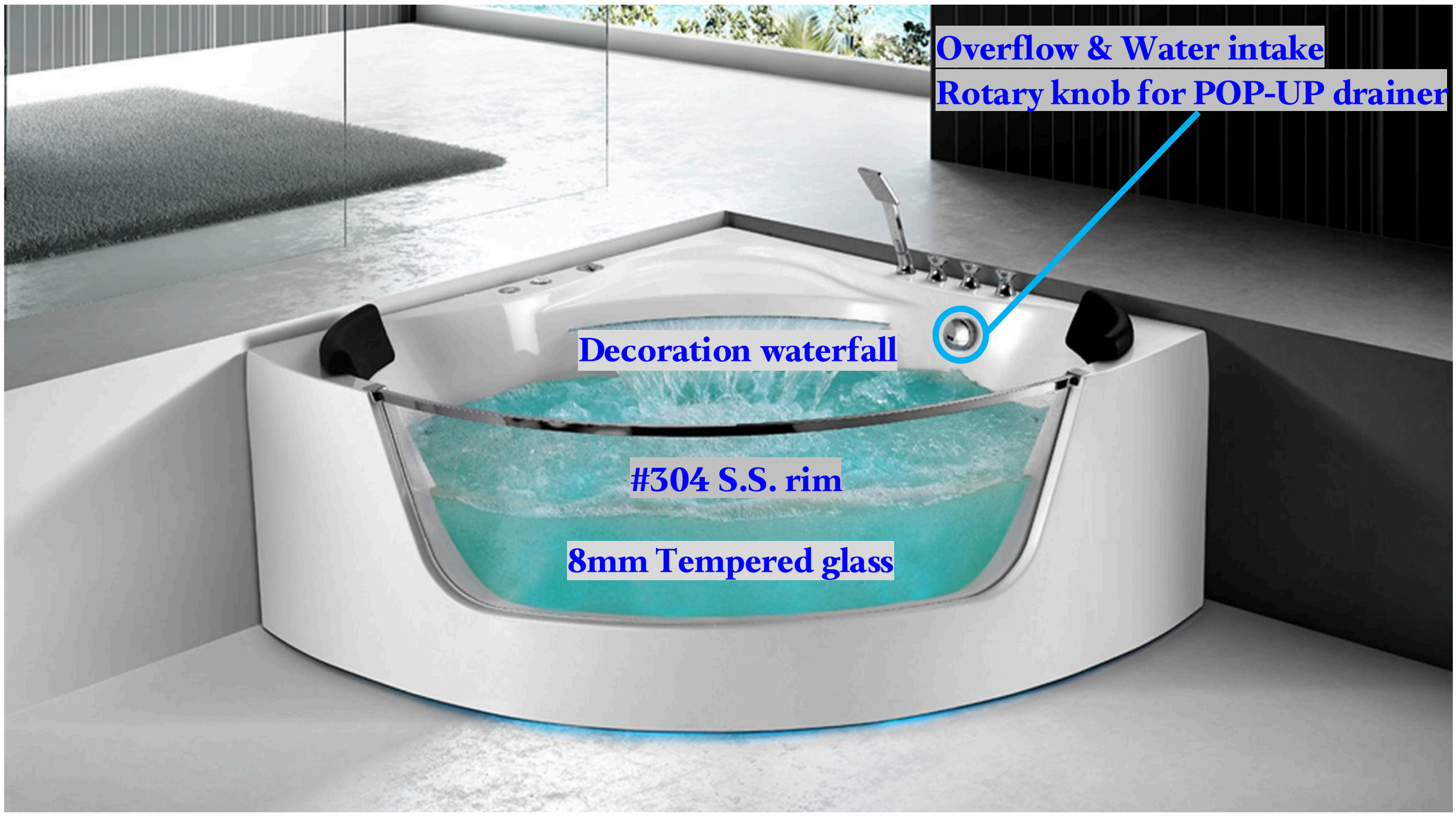

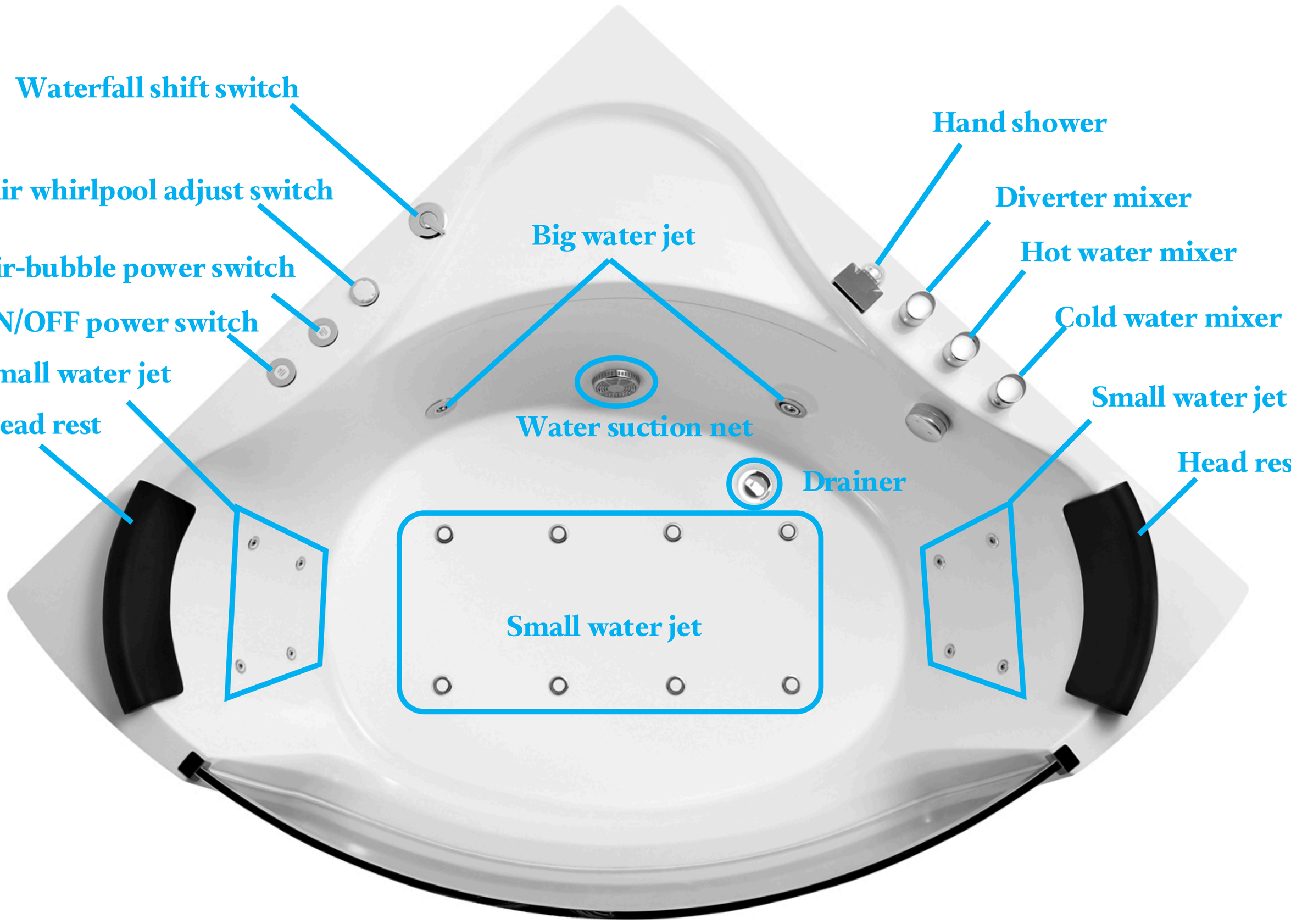

CONDRIS
MASSAGE BATHTUB

Main Technical Indices

Rated voltage: AC 110V; Frequency:60Hz
Water pump: 1100W / 1 pc
Air pump: 300W / 1 pc
Waterproof grade: IPX5
Underwater light: AC12V/3W

FAQ (Frequently Asked Question)

****Warning: Please only check after cutting off electricity****

Problems	Reasons	Solutions
Can not running	1.Cable broken. 2.Power switch does not work 3.Overheat protective unit started. 4.Water pump is blocked. 5.Fuse broken. 6.Wrong connection.	1.Check the cable and current leakage protection switch. 2.Check the connection of power cable. 3.Restart after motor cooling down. 4.Take out the block. 5.Check the fuse. 6.Check wire circuit, make a right connection.
Water pump does not run effectively	1.Connector is not fastened. 2.Leakage from the unfastened.	1.Fasten the connector. 2.Clean the water pump ,check the components ,change a new one if damage, then fasten it again.
Massage power Is not enough	1.The air whirlpool adjusting switch does not adjust well. 2.Water suction net is blocked. 3.The air whirlpool adjusting switch does not work.	1.Adjust the air whirlpool adjusting switch. 2.Clean the garbage. 3.Check if the air whirlpool adjusting switch is damaged.
Too noisy	1.Bathtub is not leveled. 2.Vibration. 3.Some scraps are inside the water pump.	1.Check if there are gaps between the bathtub feet and the floor. 2.Check if the water pump is loosened or the others are loosened. 3.Check the water pump.
Motor is overheated	1.Wrong voltage cable. 2.Cable cannot meet the standard. 3.Voltage is too low.	1.Check the cabling. 2.Change the cable. 3.Install a voltage stabilizer.
Drainage blocked	1.Garbage blocks the pipe. 2.Drainage pipe is squeezed.	1.Clean the garbage. 2.Regulate the drainage pipe.

Please contact us if you have any questions.

CONDRIS
MASSAGE BATHTUB

Installation Steps

Step 1: Level the bathtub

Place the bathtub in your bathroom properly, the bathtub has been fixed on the stainless steel support, you can adjust the level of the bathtub by screwing height-adjustable foot. Please level and tighten the height adjustable foot at the bottom of the bathtub as they may be loosed in transport.

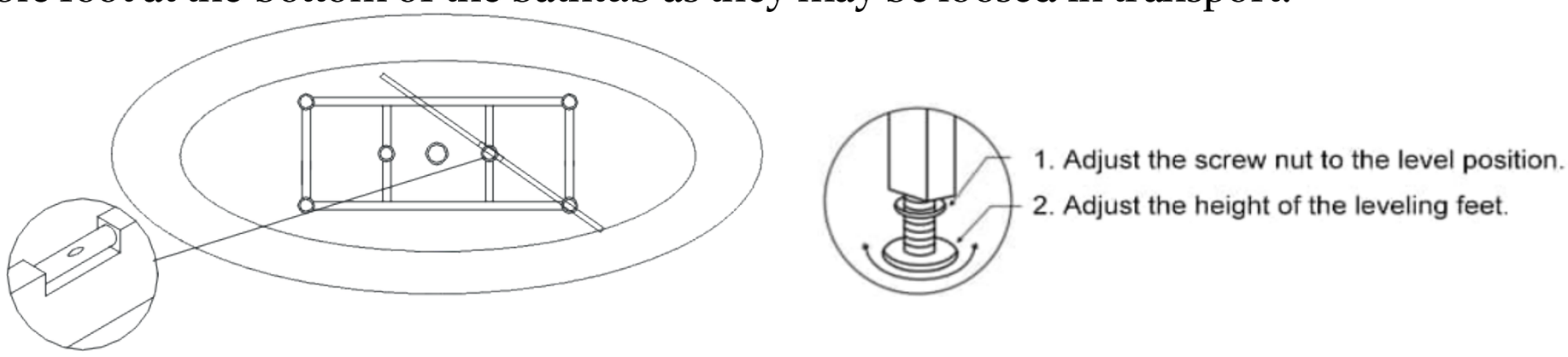

Step 2: Water supply connection

Please connect the hot and cold water intake pipe to the hot & cold water supply respectively as below pictures.

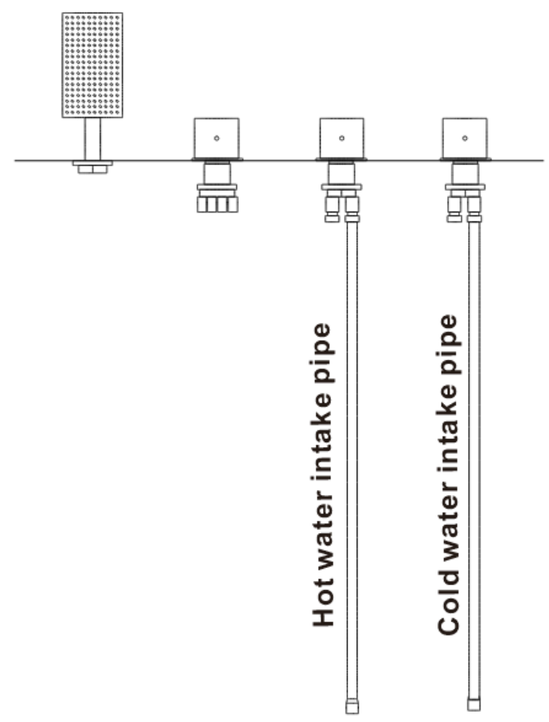

Step 3: Draining pipe connection

Connect the drainage pipe to the draining hole set on the floor as the below picture.

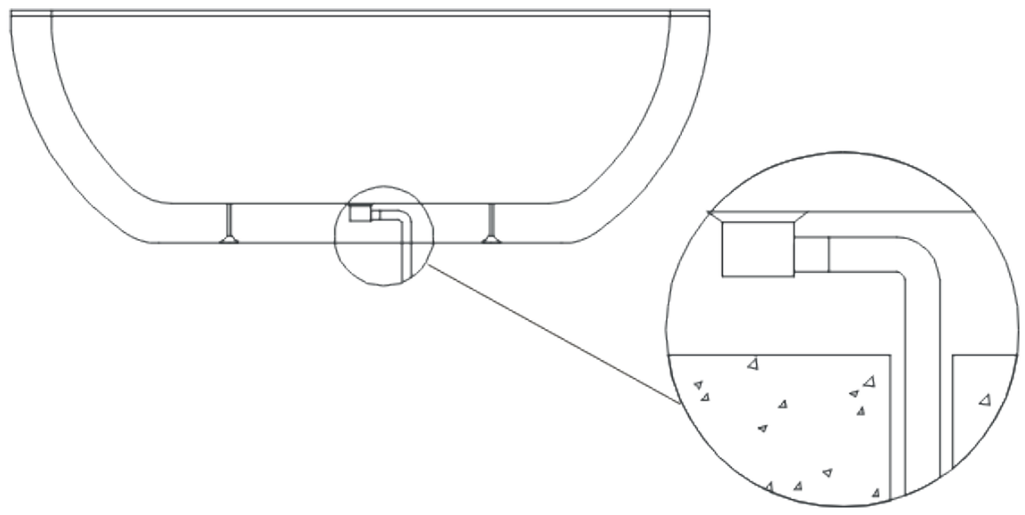

Step 4: Power supply connection

Put on the plug into the socket set on the wall.

Step 5: Apply the silicone glue

After testing the bathtub with electricity and water in good performance. Apply the silicone glue into the gap between the wall and bathtub for waterproof purpose.

Size Drawing

CONDRIS

MASSAGE BATHTUB

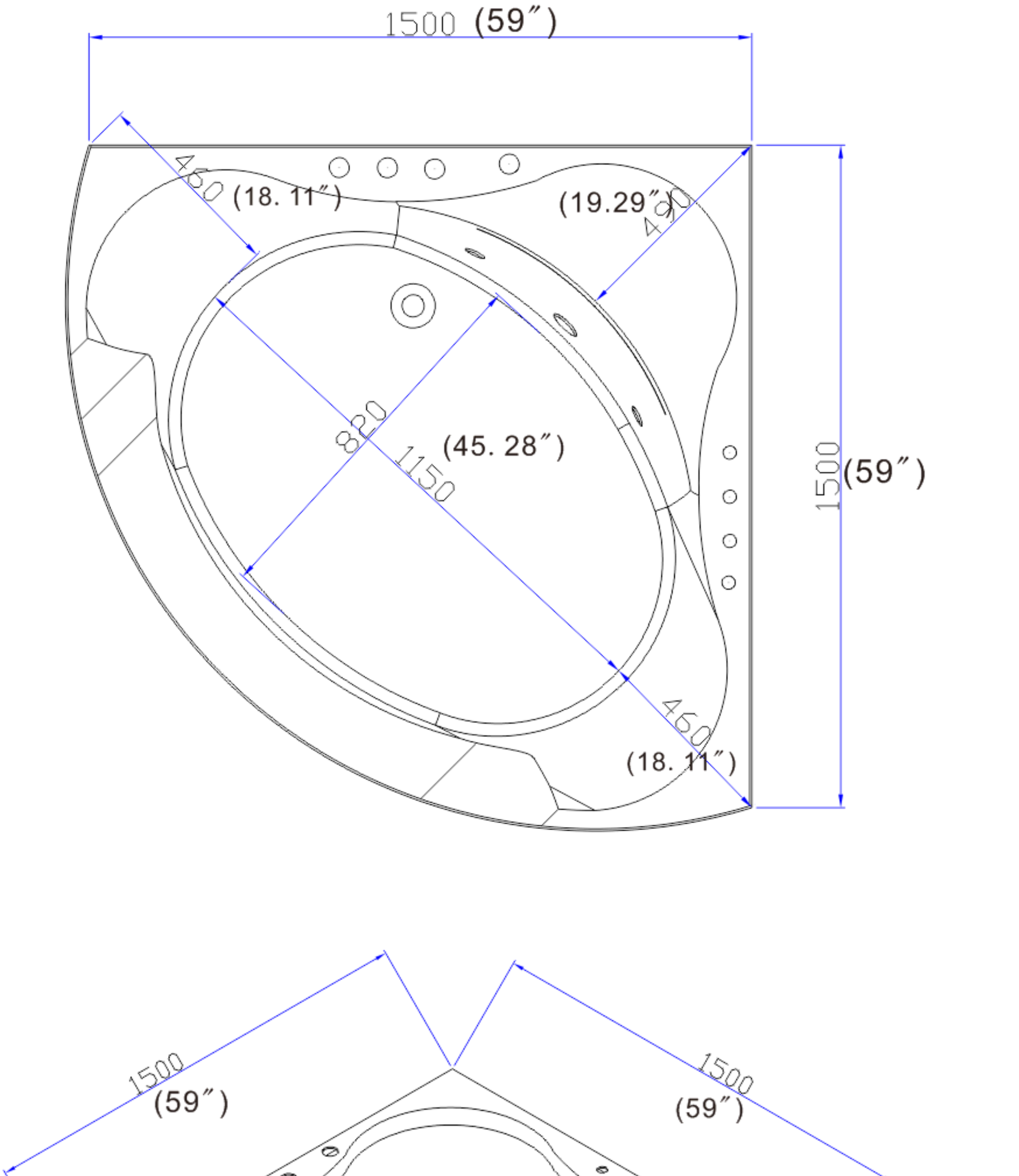

Important Notice

※Please do not lift the bathtub by the glass and the stainless steel rim.

CONDRIS

MASSAGE BATHTUB

※Please do not start the water massage funtion unless the water level of the bathtub is 2" (50mm) higher than the highest water jet.

●Please unpack the bathtub and check it carefully to ensure it has not been damaged in transport.

●All the accessories this bathtub are pre-fitted, except for the hand shower. Please check that all parts have been supplied.

●Store the bathtub in a safe place until you begin installation to avoid damage.

●Assemble the bathtub on a mat to protect against damage to bathtub surface.

●No claims for damages or blemishes will be accepted once the bathtub has been installed.

● Any electricity supply and water supply installation should be carried out by a qualified plumbing technician.

●This bathtub requires two persons for proper lifting purpose.

●Please make sure that the floor is completely flat and the entire base of the bathtub must be fully supported by the floor to prevent the bathtub becoming damaged through stress.

●Please contact our us if you have any questions.

Warning

●Never use the hard cleaner as it will damage the bathtub surface.

●Bathtub material is exclusive acrylic with glass fiber reinforcement; water temperature should not be higher than 90℃.

●Please ensure that children are supervised when using the bathtub.

● When you install the bathtub, please ensure the protective grounding has been done, the intake of the electricity must be connected to a leakage protection switch 16A, and you have to verify the operating of this leakage circuit breaker is in order or not.

●Ensure no overload the rated electricity current when you finish all the connecting of the massage bathtub.

●The water massage pump can not be started up unless the water level of the bathtub is 50mm higher than the highest water jet.

●We have installed the overheat protection unit inside the water massage pump, if it is overheat, it will shut down automatically, it will turn on again automatically after cooling down .

●An anti-slip rubber mat may be used to avoid accidents that may occur from the slippery surface.

●Individuals who have health conditions should consult their physicians before using the bathtub.

●Maximum water pressure 0.6MPa and minimum water intake pressure 0.2MPa.

Maintenance

●Please avoid touching the hard or sharp things for bathtub surface. If some scratches or abrasion, grind with #2000 waterproof abrasive paper, then polish with toothpaste and soft cloth.

●Please use the soft wet cloth or sponge with neutral detergent when cleaning the bathtub, never use corrosive detergent such as strong acetic or soda etc for cleaning to avoid damaging the bathtub surface.

●The accessory surface shall not touch the hard or sharp things as scratch, never sweep them with rough cloth.

Operation Instruction

● Press ON/OFF power switch to turn on

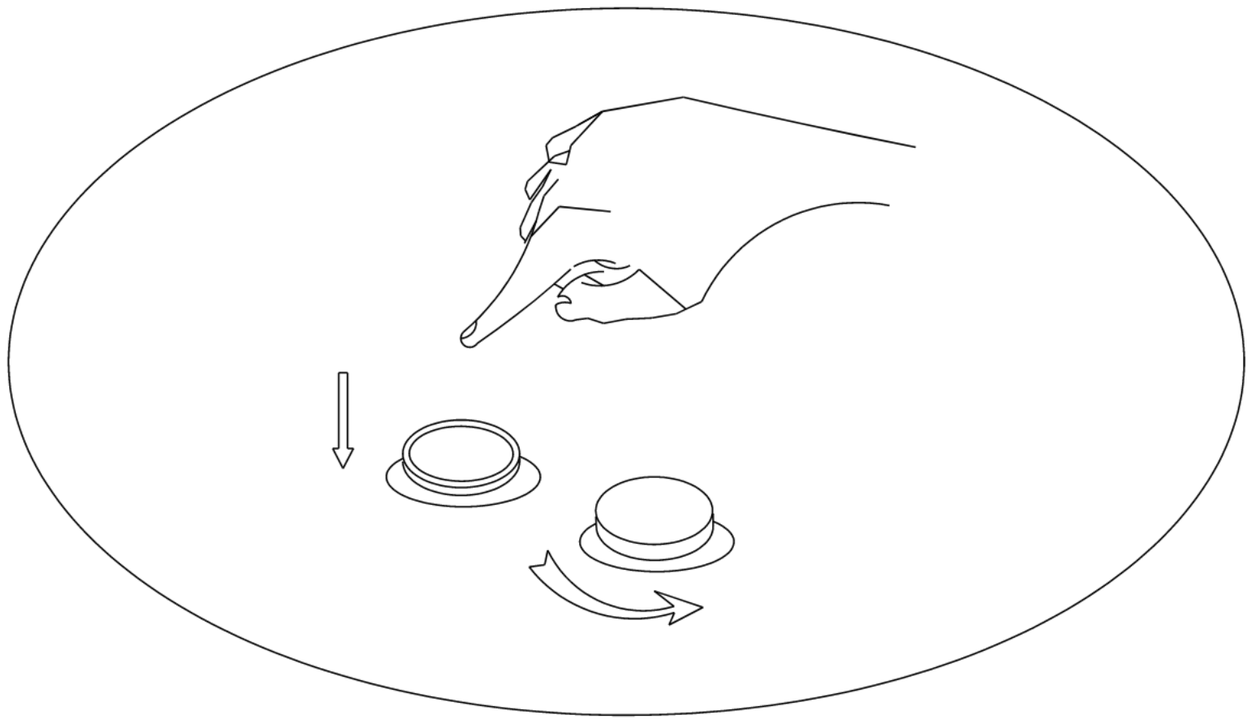

the water massage pump, the water massage function is on and the underwater LED light is on together. Press the ON/OFF power switch second time to turn off the water massage function and underwater LED light.

※**The water massage pump can not be started up unless the water level of the bathtub is 2" (50mm) higher than the highest water jet.**

- Please adjust the water massage pressure by the air whirlpool adjusting switch.
- Please adjust the waterfall by waterfall shift switch.

Water and Power Supply Installation Illustration

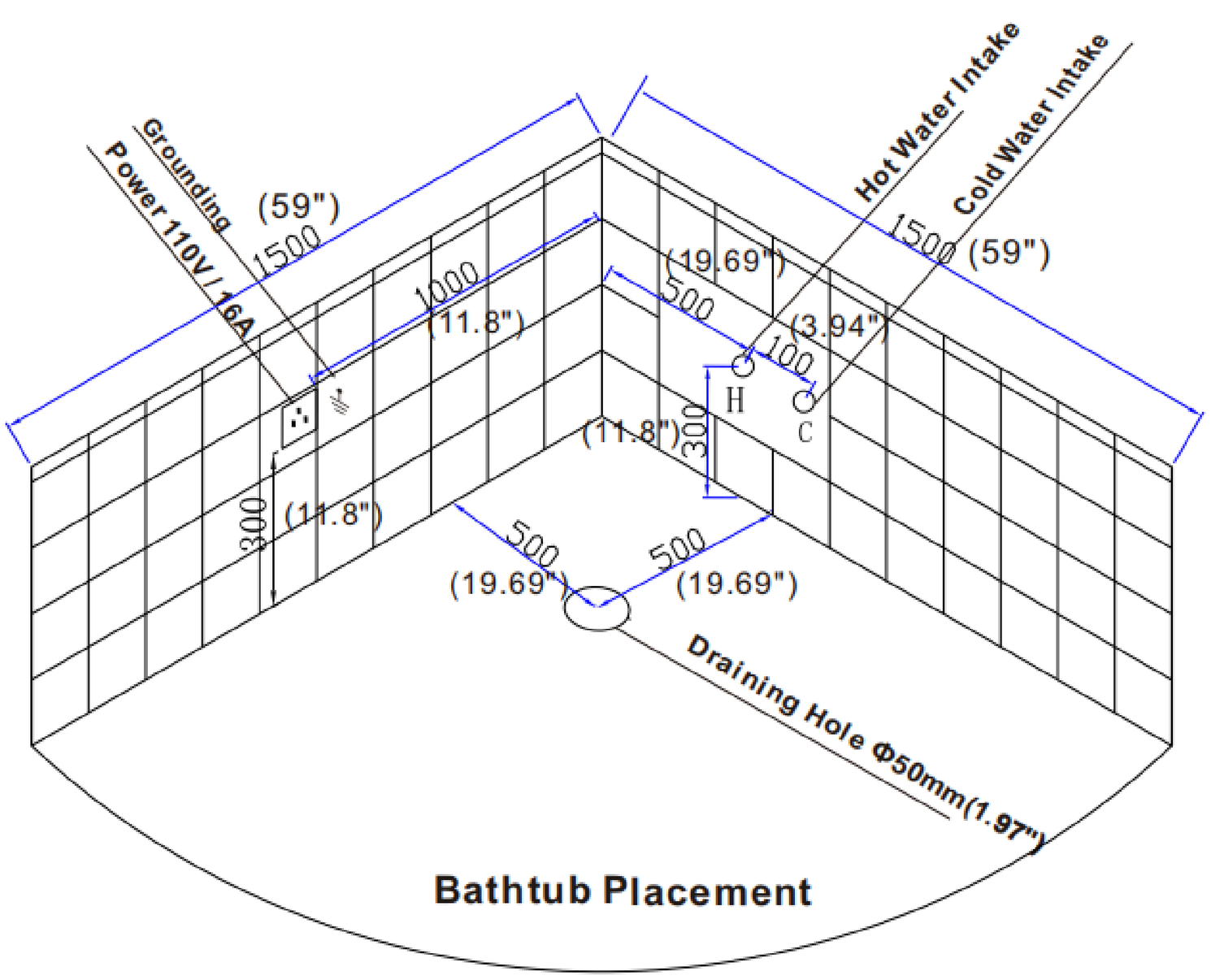

- Water supply: The connection for cold and hot water intake is G1/2 galvanized water pipe for each one. The height is 11.8"(300mm) from the floor.
- Power supply: 110V/60Hz, single-phase three cores system. The capacity of load should be more than 16A.The height is 11.8"(300mm) from the floor.
- Draining: The draining hole can be located within a circle of radius of 11.8"(300mm) from the mark. Draining hole in the above figure(but do not set it in the centre of circle).
- Please set the valve for cold/hot water supply and leakage protection switch for power supply respectively.
- Please cut off the power supply and the water supply when you do not use the massage bathtub.

※ An active grounding is essential.