INSTALLATION MANUAL

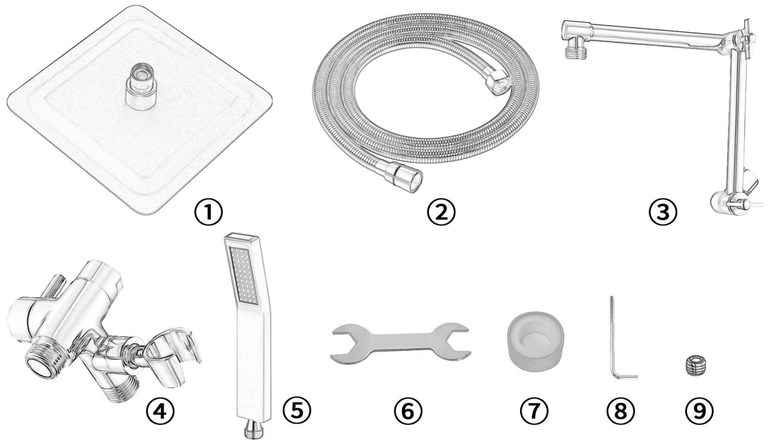

Package Contents

① 10″ Rainfall Showerhead
② 71″-75″ Shower Hose
③ Extension Arm
④ Solid Metal Diverter
⑤ Handheld Showerhead
⑥ Wrench
⑦ Teflon Tape
⑧ Hexagon Screwdriver
⑨ Spare Hex Screw

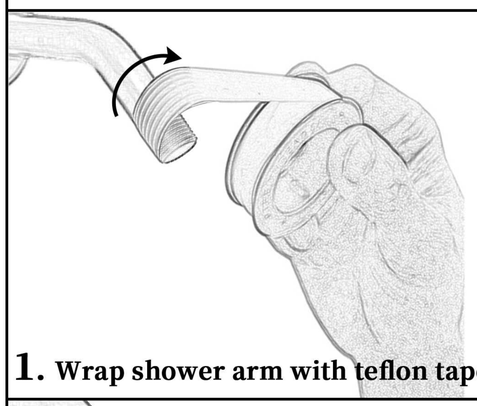

1. Wrap shower arm with teflon tape.

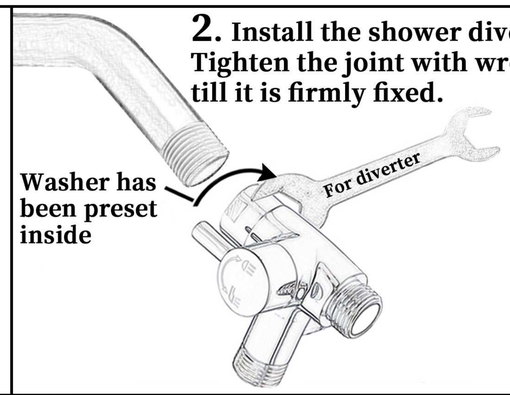

2. Install the shower diverter. Tighten the joint with wrench till it is firmly fixed.

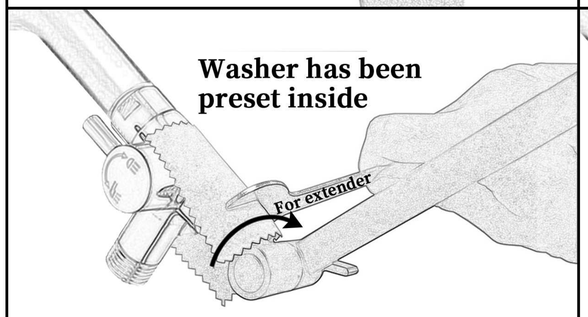

3. Install the extension arm. Put a cloth on to prevent scratches while tighten it.

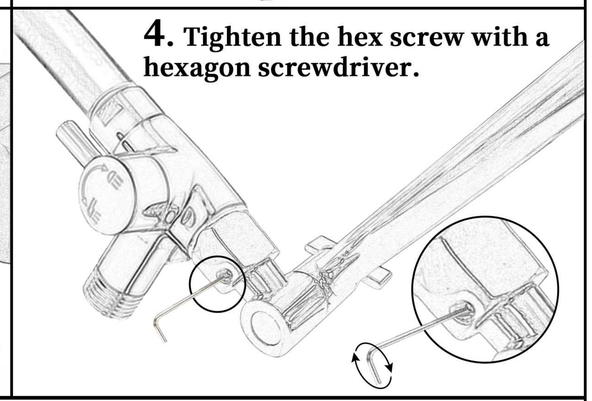

4. Tighten the hex screw with a hexagon screwdriver.

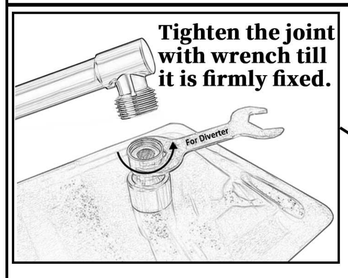

Tighten the joint with wrench till it is firmly fixed.

5. Before install the rainfall shower head, please straighten the extension arm to prevent accident happens.

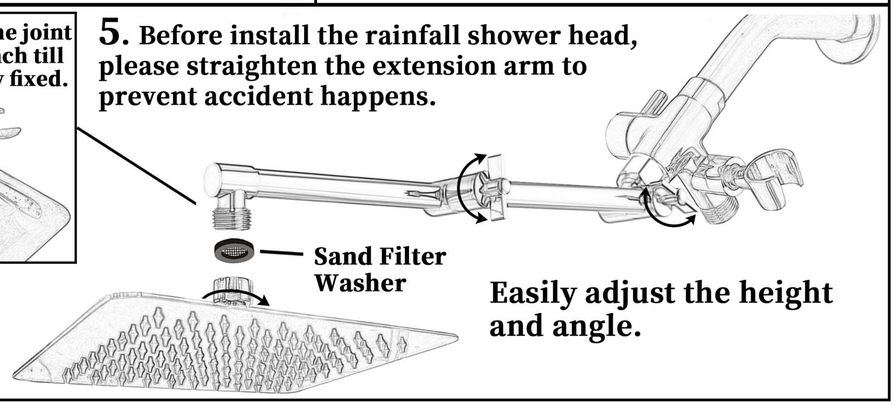

Easily adjust the height and angle.

Service e-mail: g-promise@vip.163.com

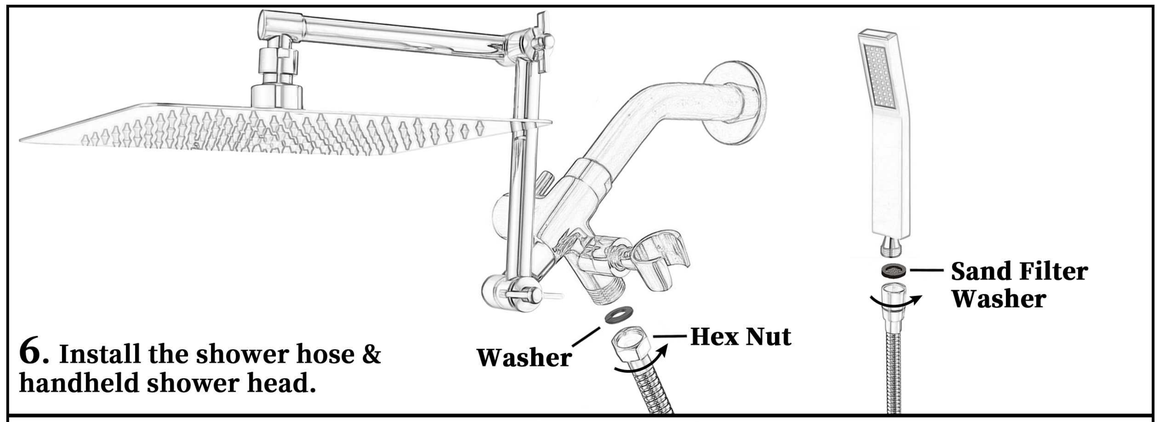

6. Install the shower hose & handheld shower head.

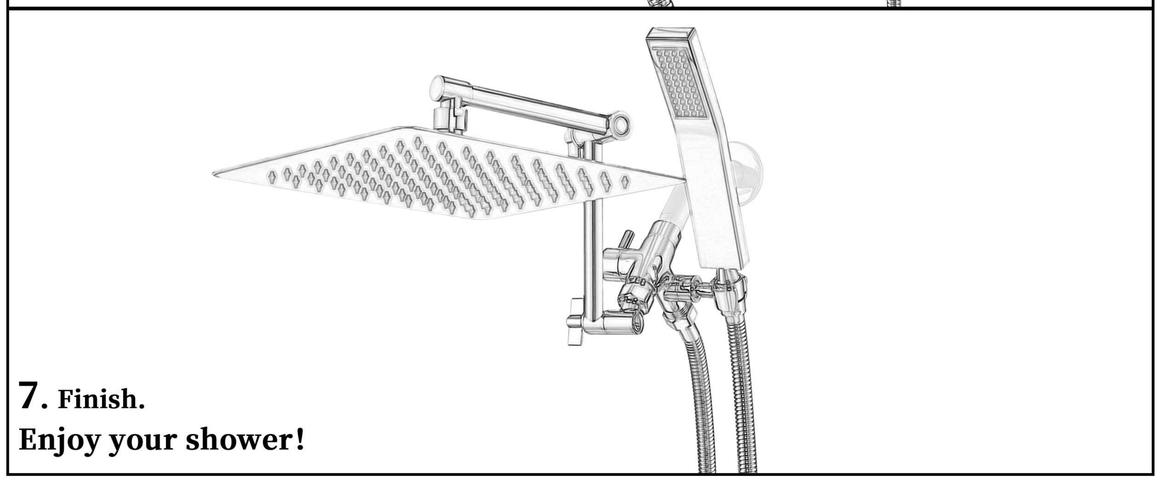

7. Finish.
Enjoy your shower!

If you want a more powerful water flow, you can choose to remove the restrictor.

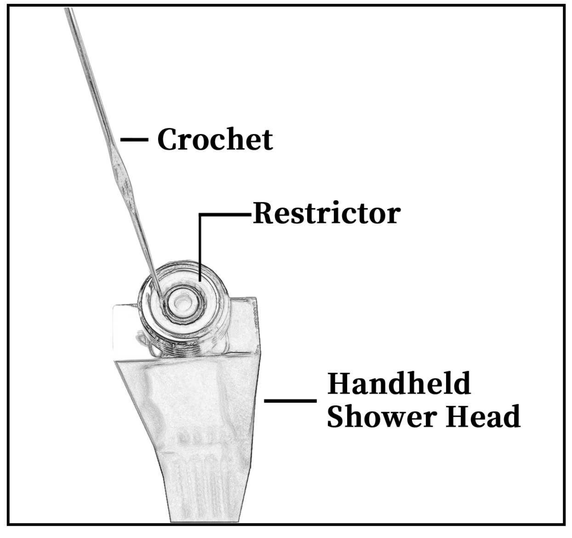

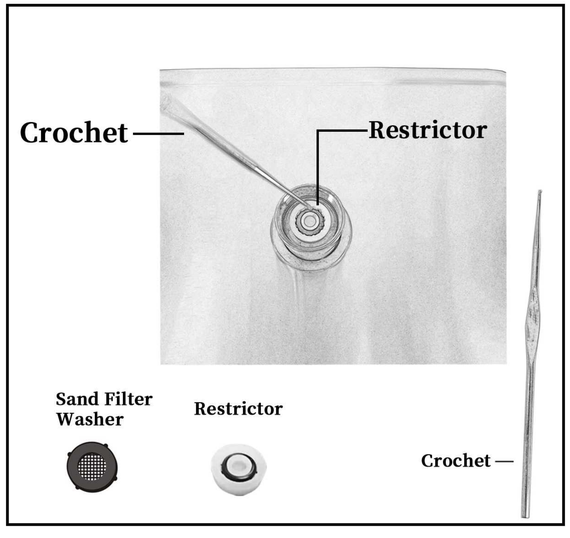

Service e-mail: g-promise@vip.163.com