INSTALLATION
Product Manual

Version: 510039US-00-26A

Installation Instructions

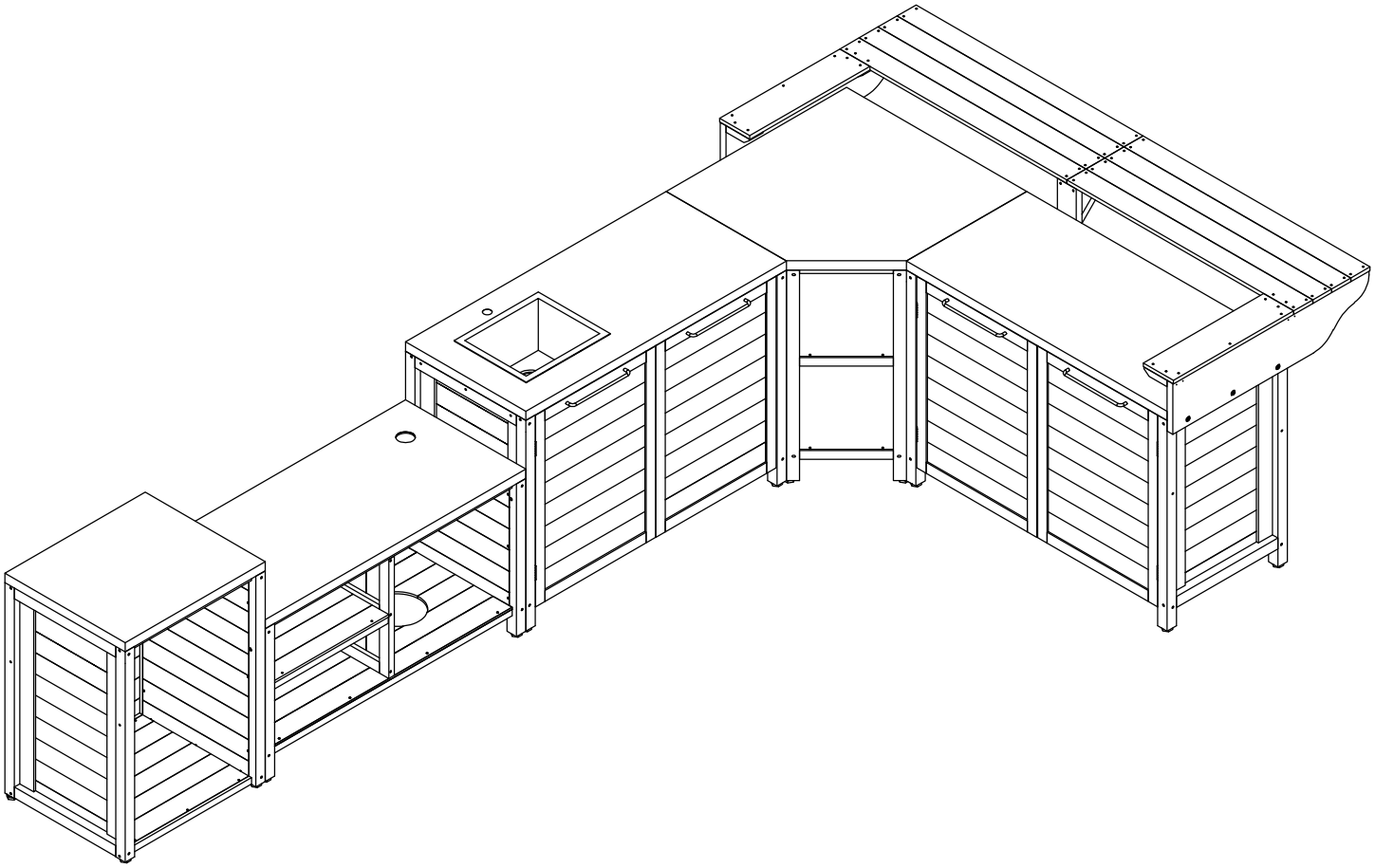

Installation Instructions

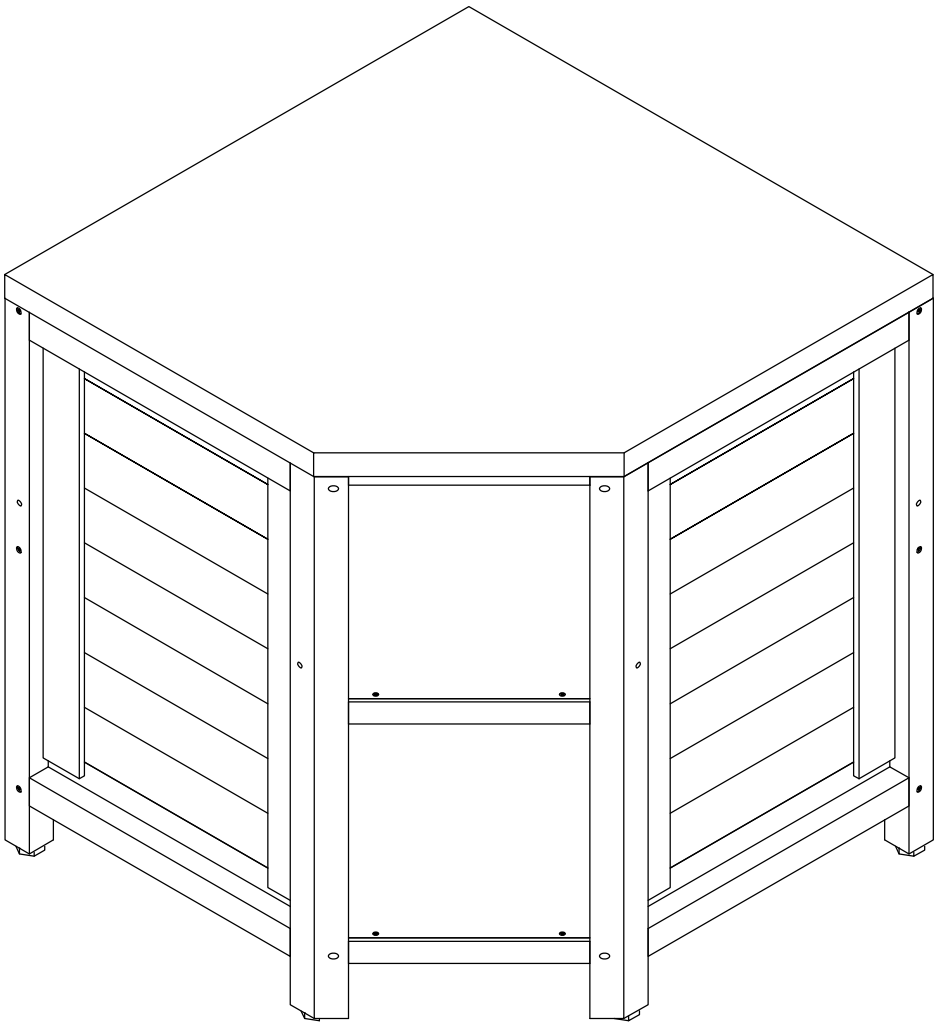

Tools Required for Installation

Icons and their uses you will see throughout this manual

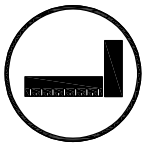

You will need to make sure that your assembly is square before tightening your bolts.

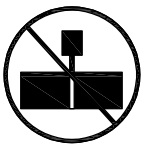

This icon warns you to not over tighten your bolts. This is to prevent structural damage and also splintering your wood.

For proper assembly you will need to ensure that your structure is level before proceeding to the next step.

This icon will show you what dril! attachments are needed. For this example you will need a Phillips head attachment .

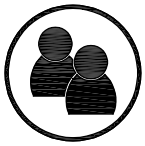

Some steps in the assembly process will require an extra set ofhands. Make sure you have a helper available.

This size of the open-end wrench on these icons should correspond to the size of the nut.

Wood Components (Not to Scale)

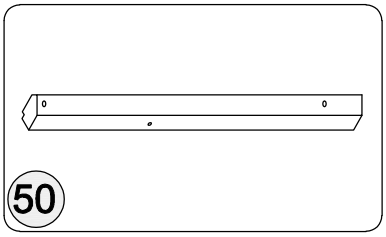

Left front pillar
Qty: 1

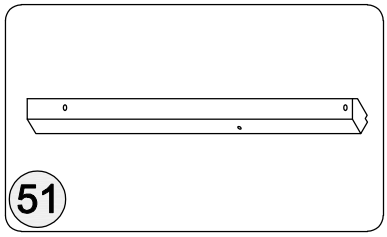

Right front pillar
Qty: 1

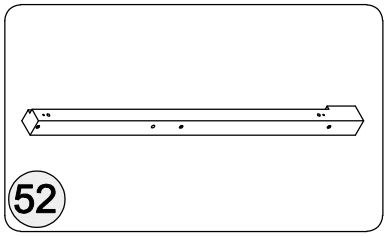

Left rear pillar
Qty: 1

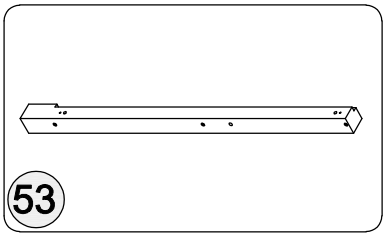

Right rear pillar
Qty: 1

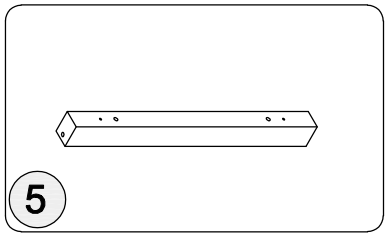

Left and right upper strips
Qty: 2

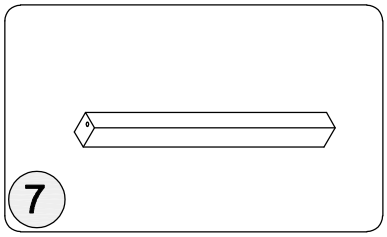

Left and right lower bars
Qty: 2

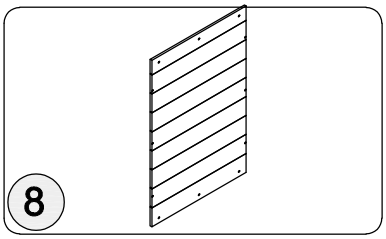

Left and right core boards
Qty: 2

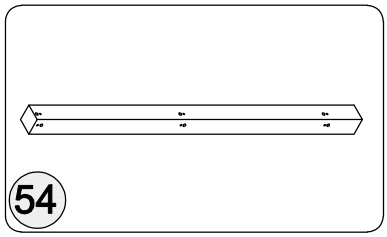

rear pillar
Qty: 1

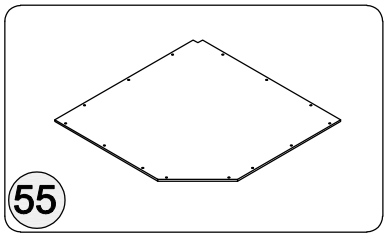

shelf board
Qty: 2

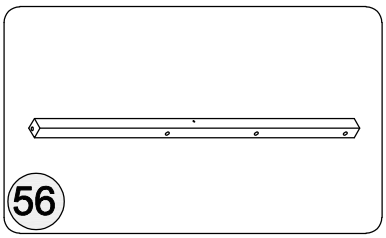

Upper left pull tab
Qty: 1

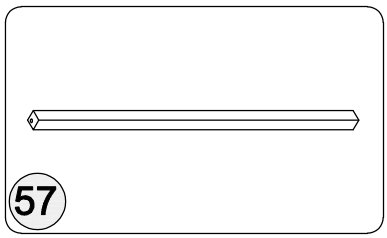

Left dropdown menu
Qty: 2

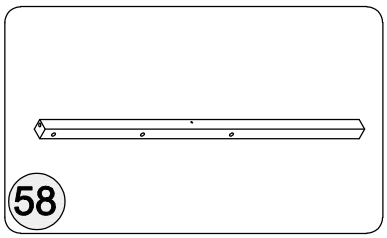

Upper right pull tab
Qty: 1

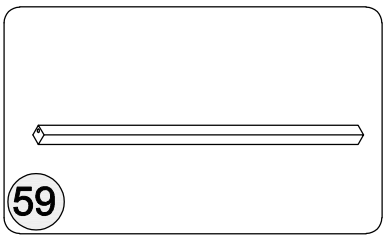

Lower right pull tab
Qty: 2

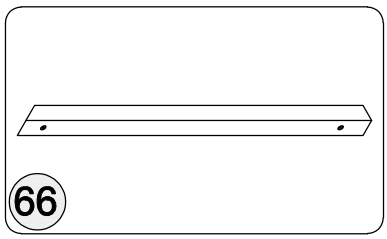

Layer board support strip
Qty: 4

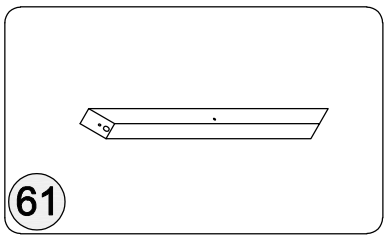

Front support strip
Qty: 1

Wood Components (Not to Scale)

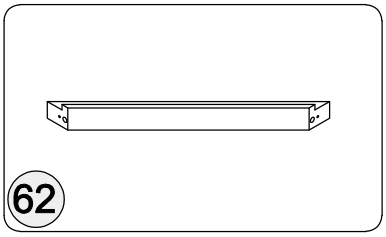

Front lower support strip
Qty: 2

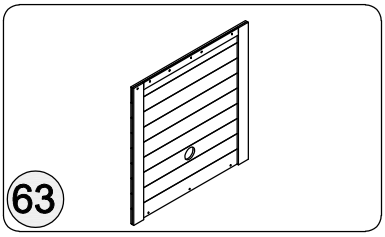

Left backboard
Qty: 1

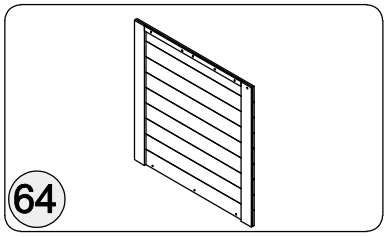

Right backboard
Qty: 1

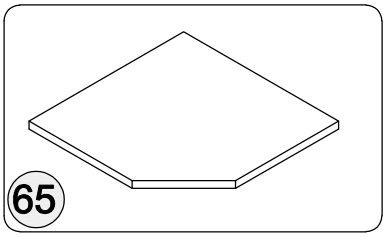

panel
Qty: 1

Hardware Components

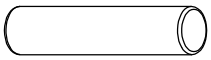

Ø8*30

A	x 30

Wooden tenons

M4*25

B	x 58

Screw

M4*45

C	x 3

Screw

M5*70

D	x 20

Screw

K	x 1

Outlet box

M5*80

L	x 4

Screw

M4*35

M	x 12

Screw

M4*40

N	x 8

Screw

M6

S	x 1

screwdriver

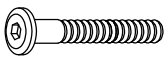

M6*80

U	x 2

screws

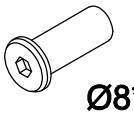

Ø8*M6*20

V	x 2

nut

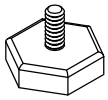

P	x 5

Adjusting Wheel

Installation of left pull strip

Step 1

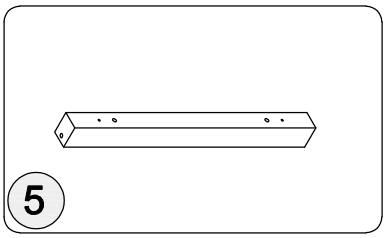

Left and right upper strips
Qty: 1

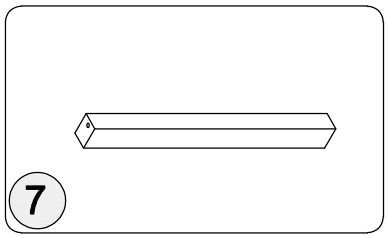

Left and right lower bars
Qty: 1

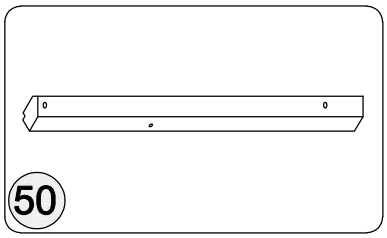

Left front pillar
Qty: 1

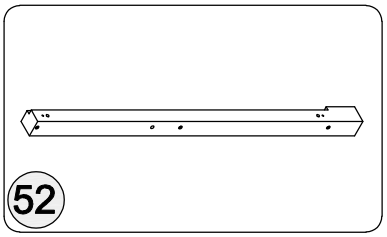

Left rear pillar
Qty: 1

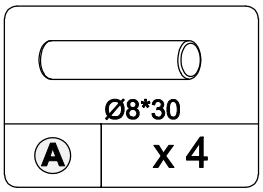

1. Connect the components with hardware A, ensuring the correct hole positions

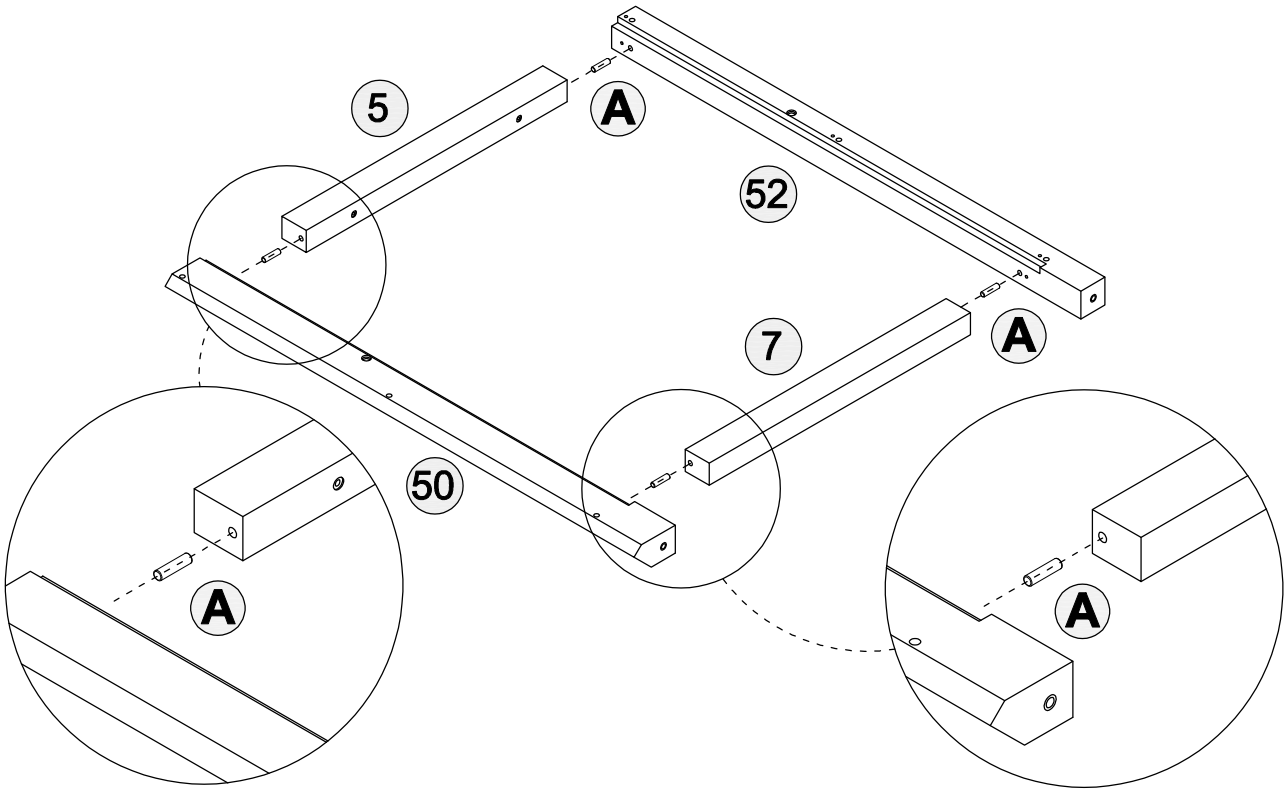

Installation of left core board

Step 2

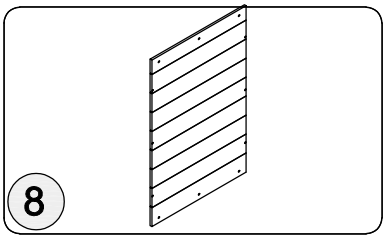

Left and right core boards
Qty: 1

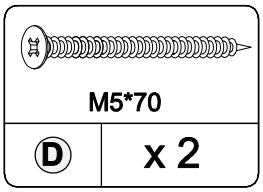

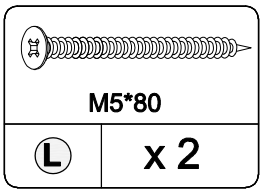

1. Insert part 8, ensuring it is level both vertically and horizontally
2. Install hardware D

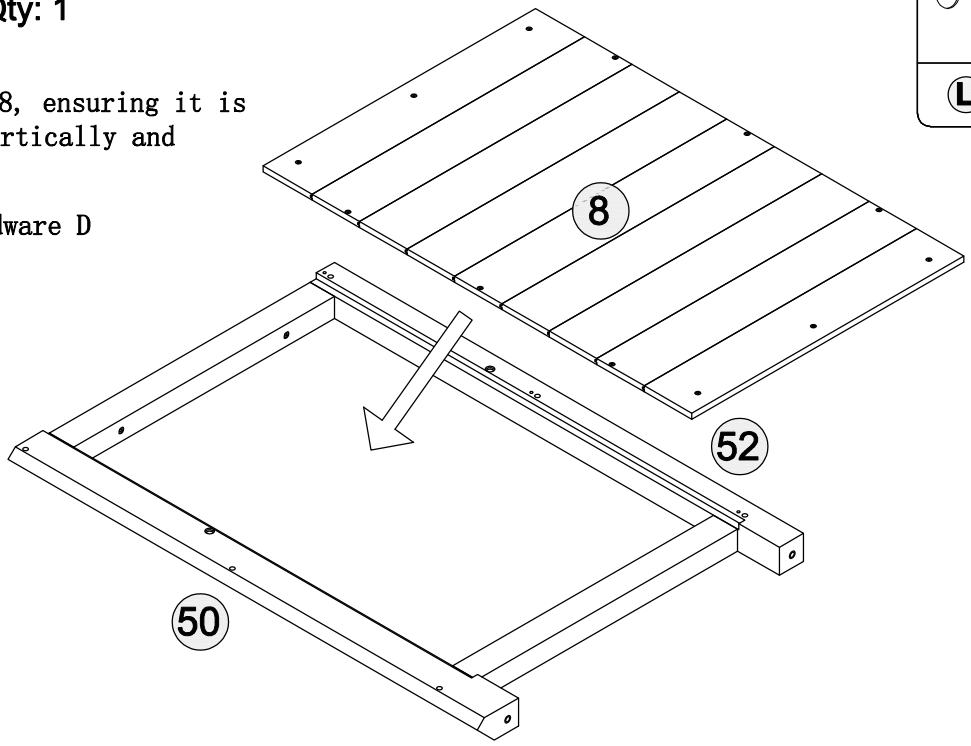

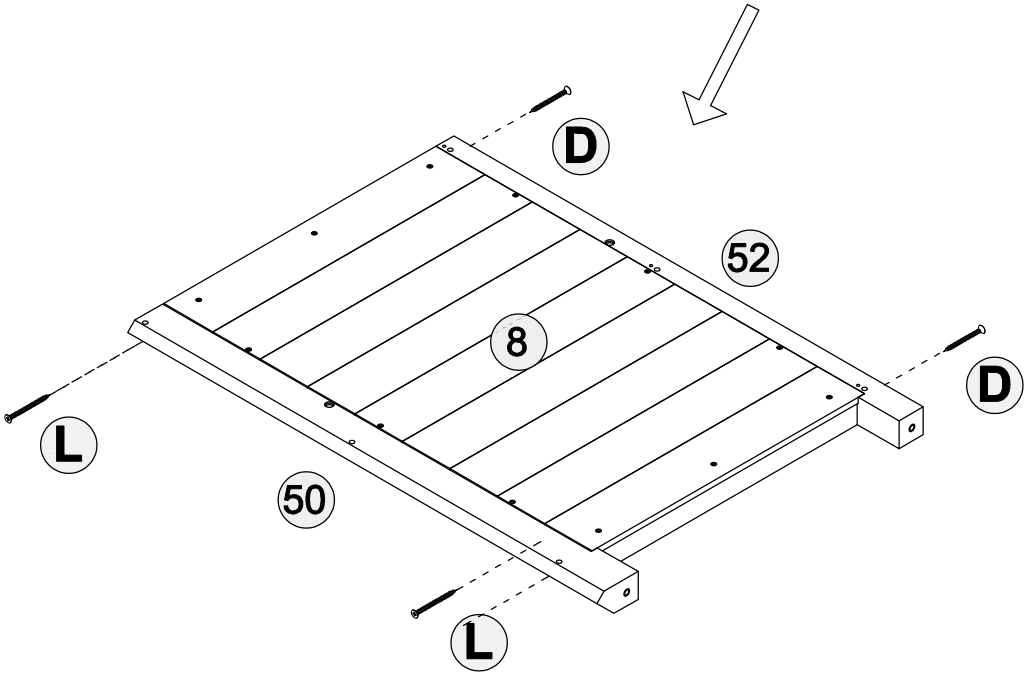

Installation of left core board

Step 3

M4*25

B	x 12

P	x 2

1. Install hardware B
2. Rotate clockwise to install and adjust the foot

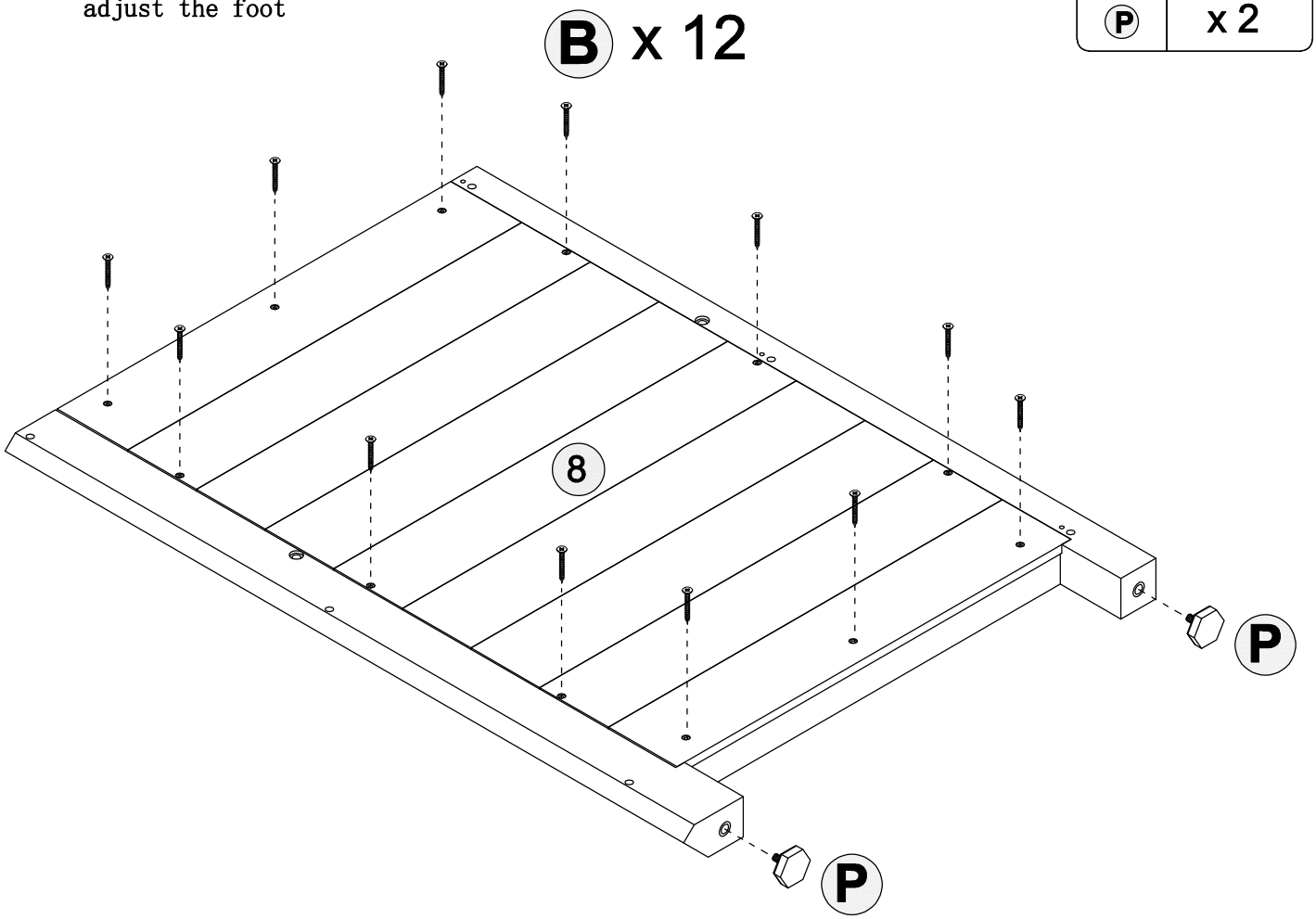

Installation of the right pull strip

Step 4

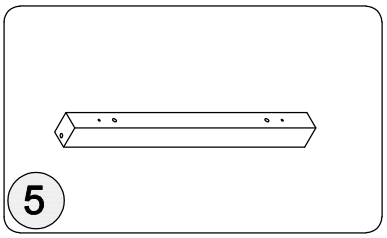

Left and right upper strips
Qty: 1

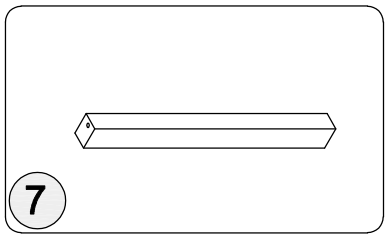

Left and right lower bars
Qty: 1

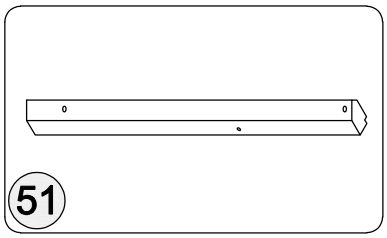

Right front pillar
Qty: 1

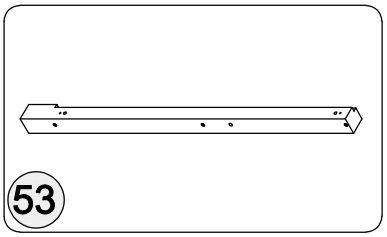

Right rear pillar
Qty: 1

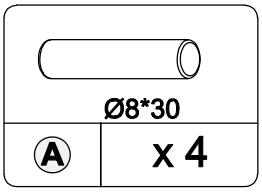

1. Connect the components with hardware A, ensuring the correct hole positions

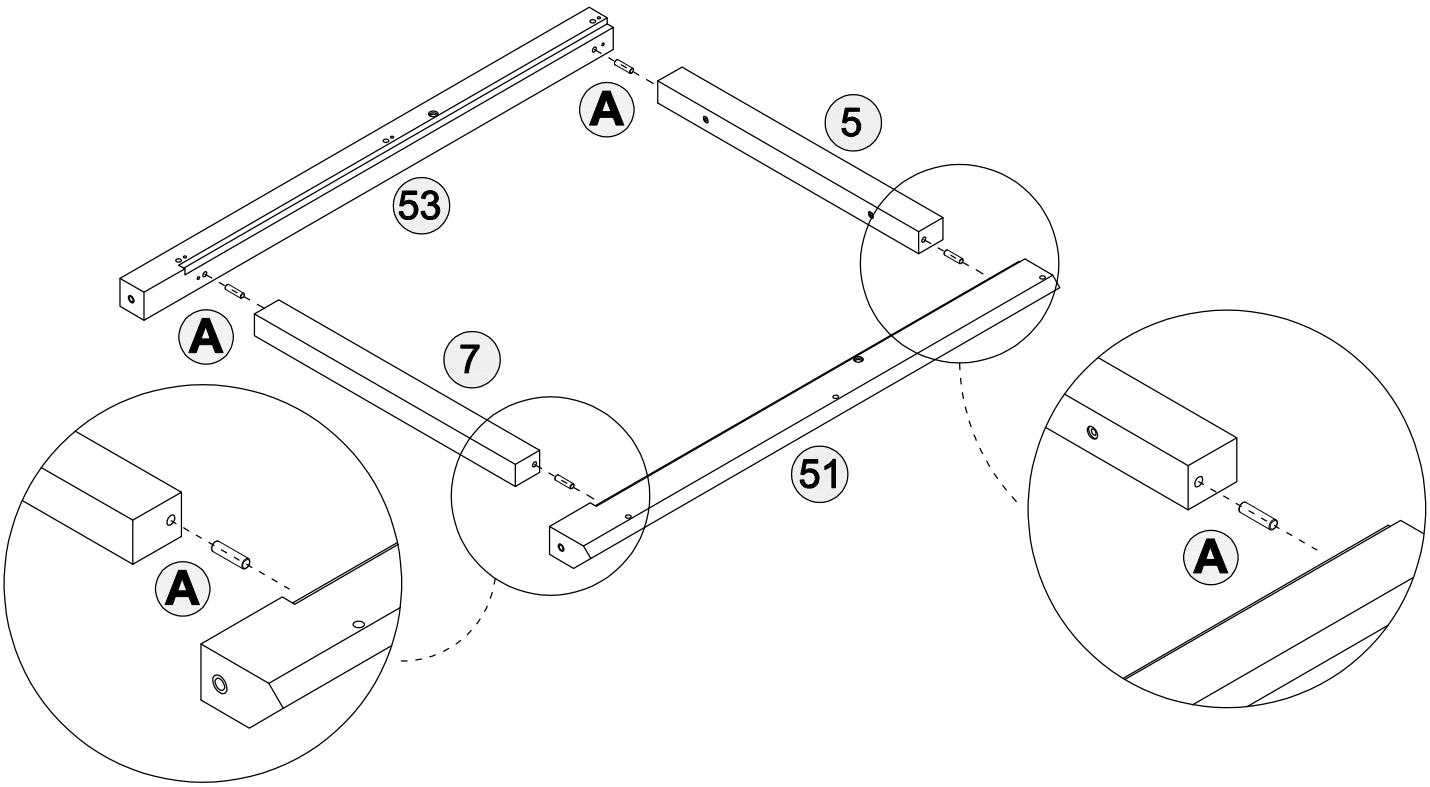

Installation of the right core board

Step 5

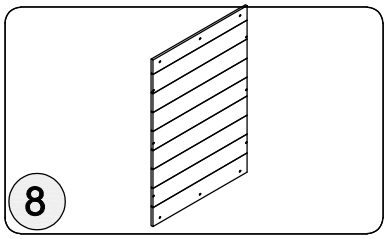

Left and right core boards
Qty: 1

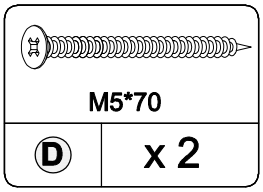

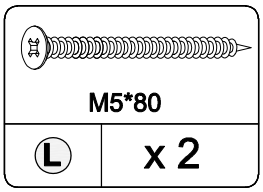

1. Insert part 8, ensuring it is level both vertically and horizontally
2. Install hardware B

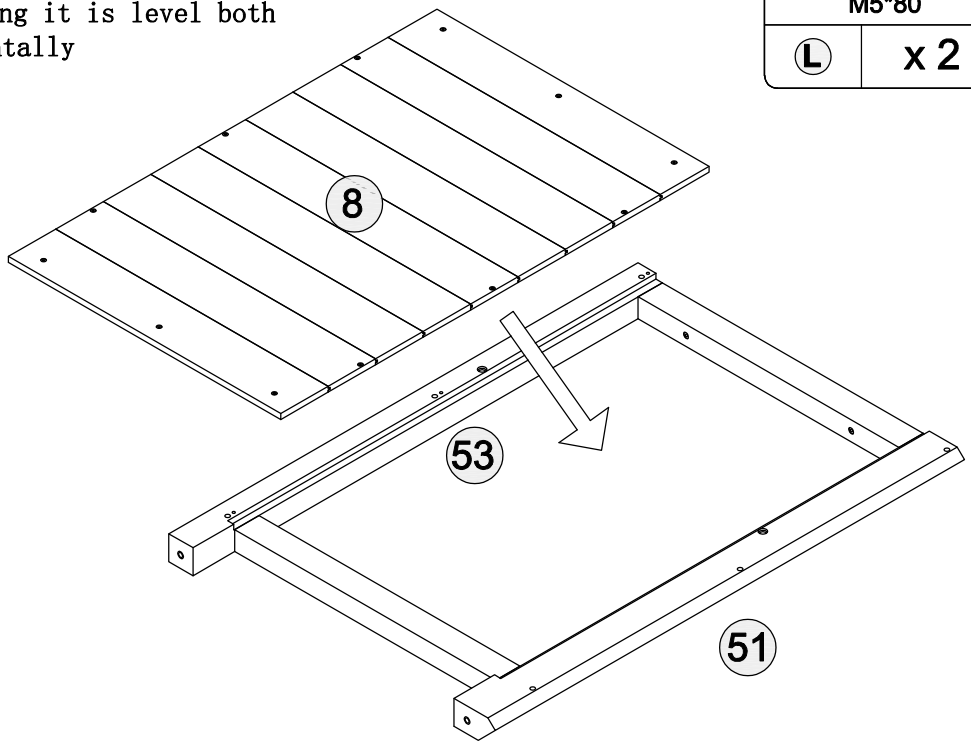

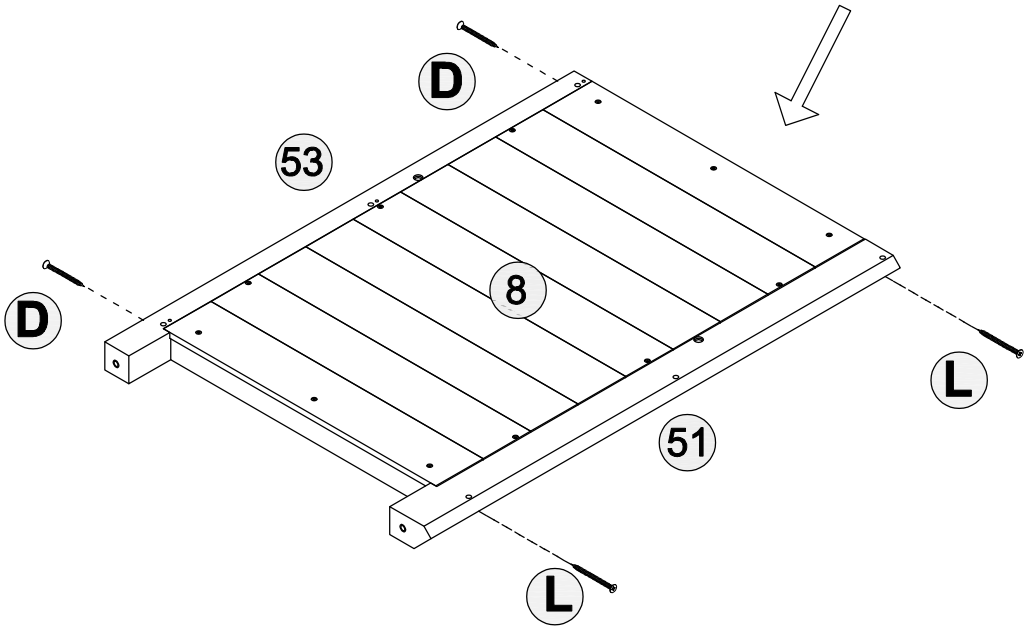

Installation of the right core board

Step 6

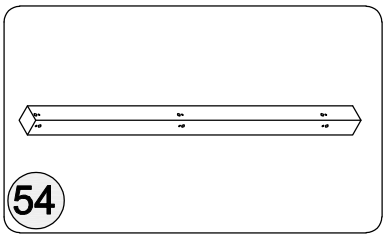

rear pillar

Qty: 1

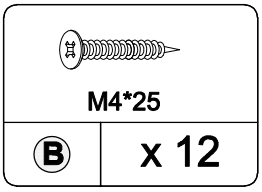

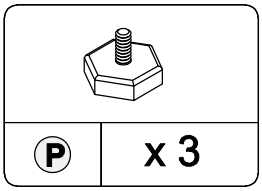

1. Install hardware B
2. Rotate clockwise to install and adjust the foot

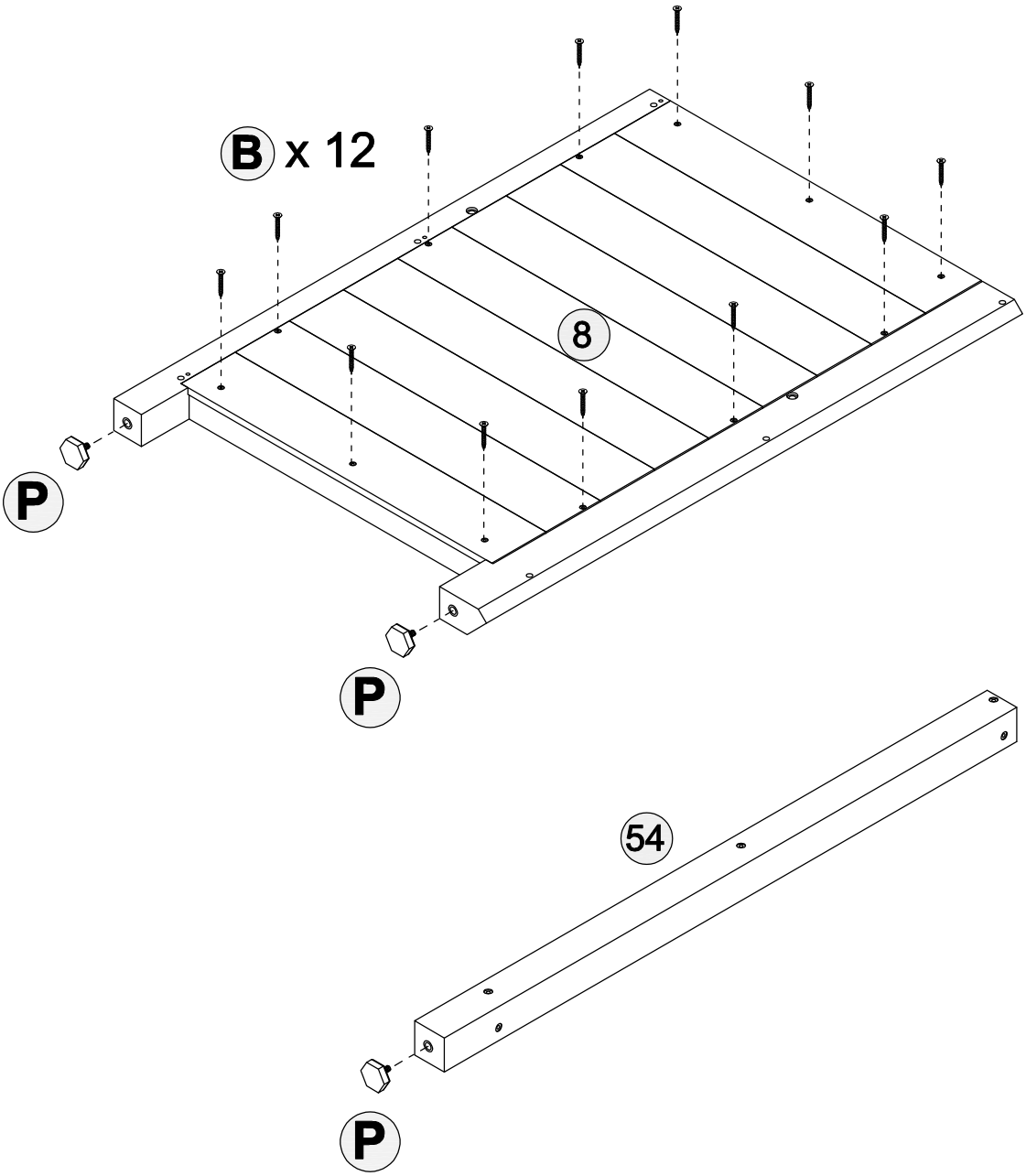

Installation of front pull strip

Step 7

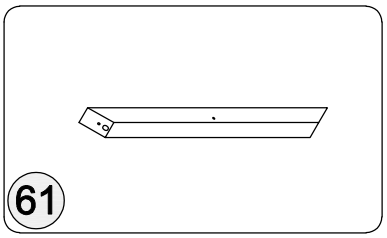

Front support strip
Qty: 1

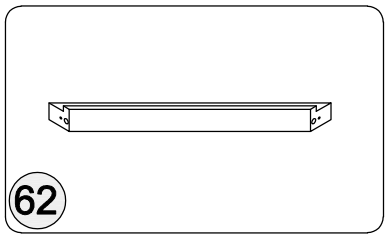

Front lower support strip
Qty: 2

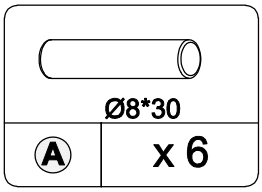

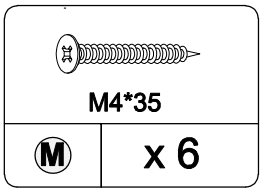

1. Connect with hardware A first, then install with hardware M

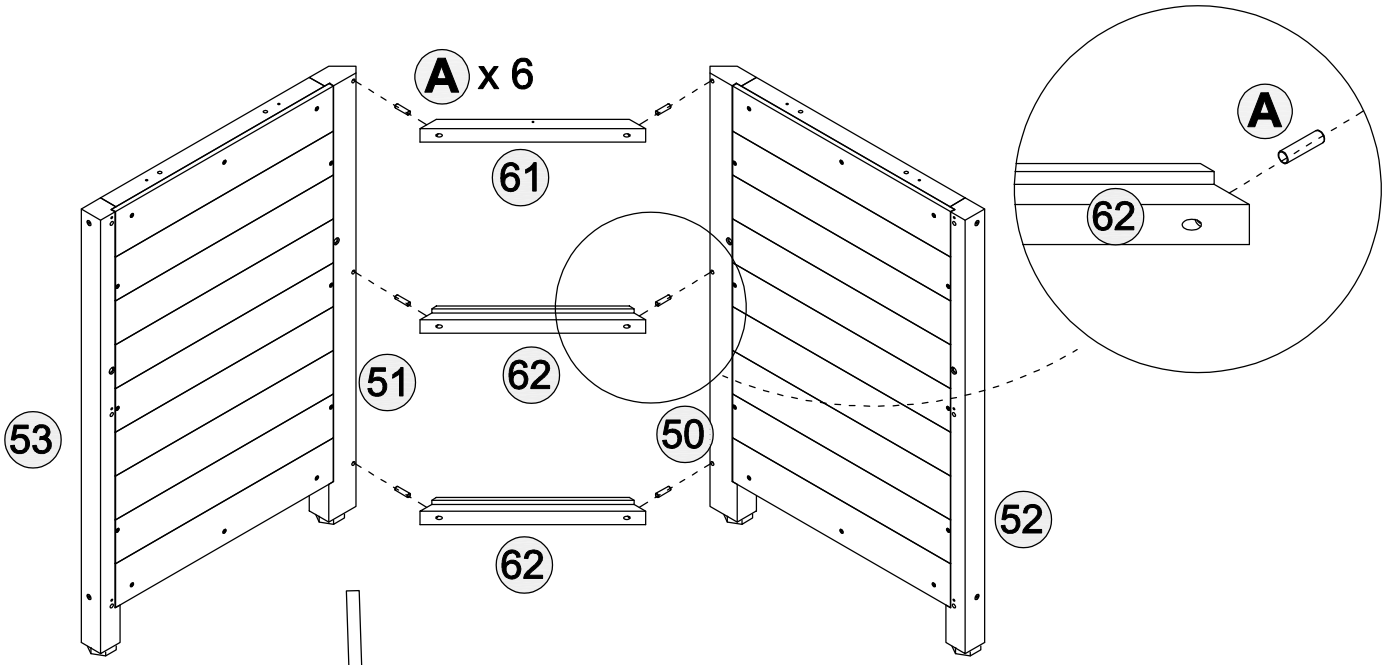

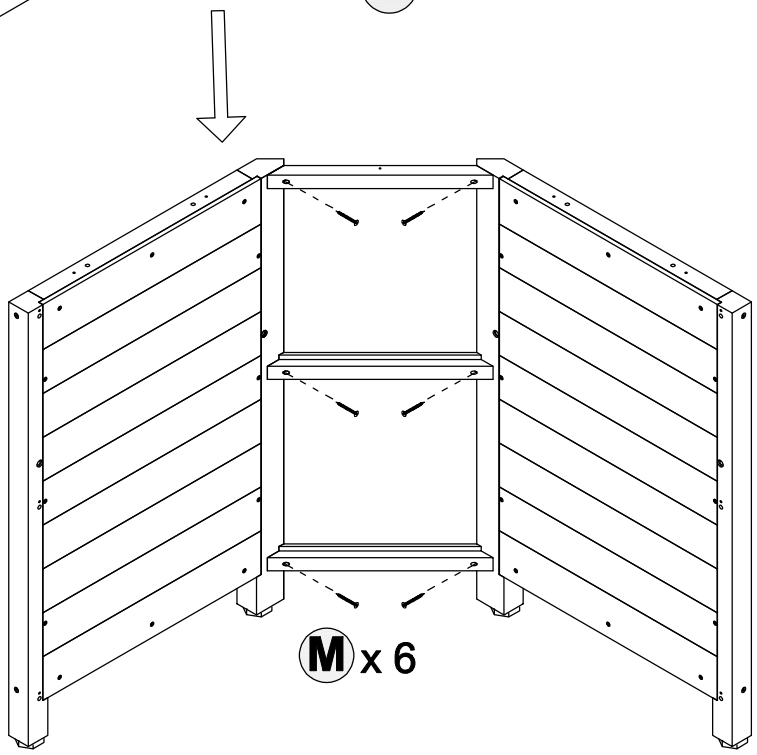

Right pull bar installation

Step 8

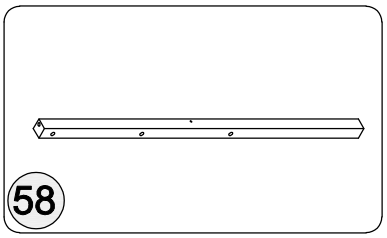

Upper right pull tab
Qty: 1

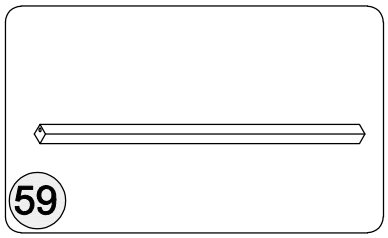

Lower right pull tab
Qty: 2

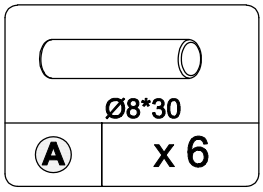

1. Connect the components with hardware A, ensuring the correct hole positions

Left pull bar installation

Step 9

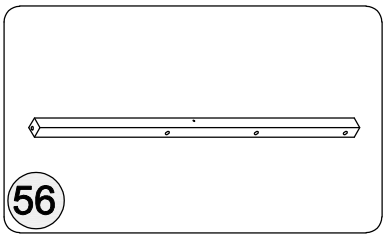

Upper left pull tab
Qty: 1

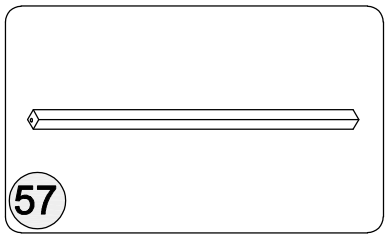

Left dropdown menu
Qty: 2

1. Connect the components with hardware A, ensuring the correct hole positions

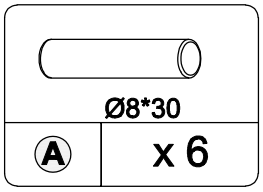

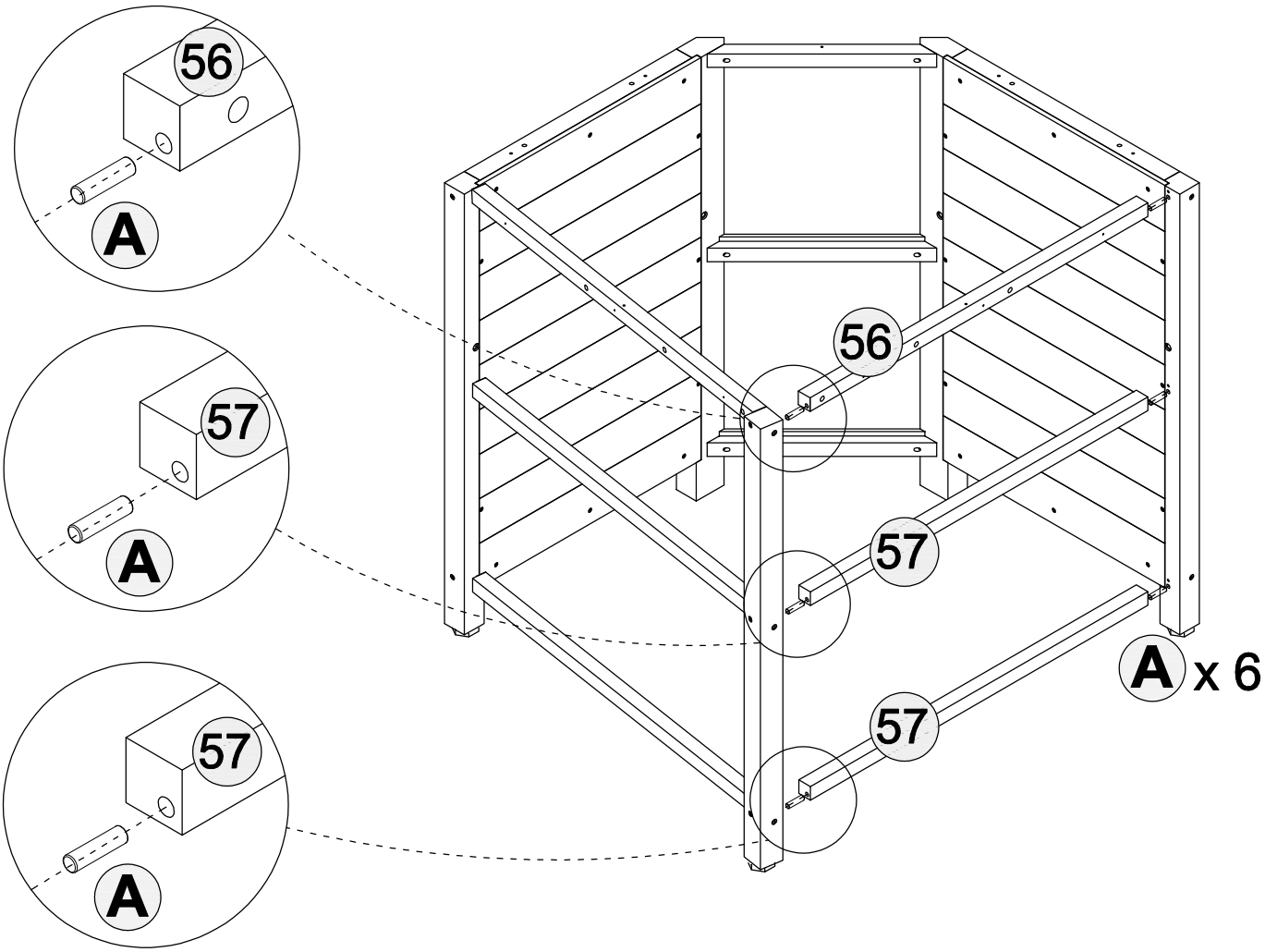

Rear pillar installation

Step 10

1. Install hardware D

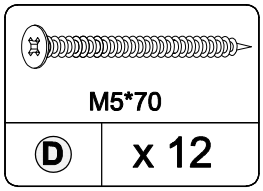

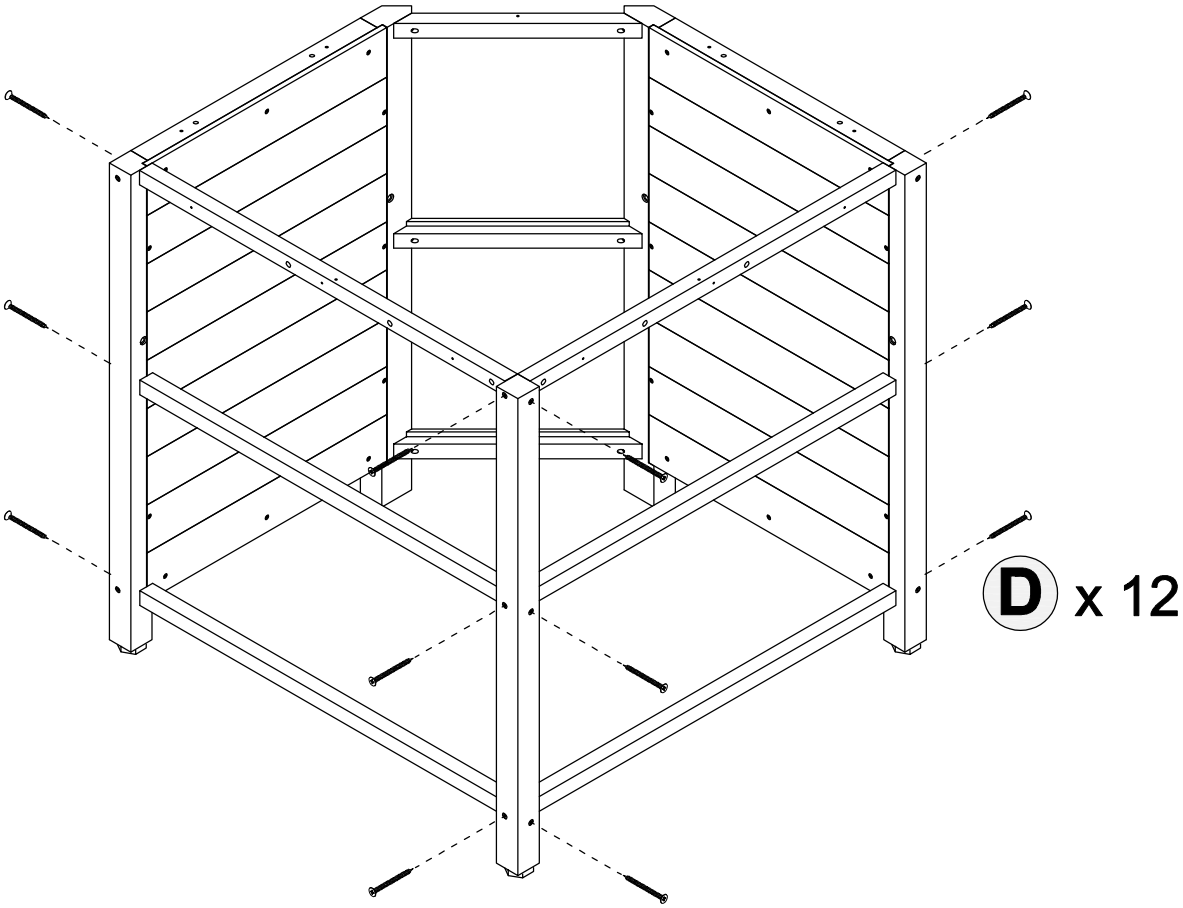

Installation of bracket

Step 11

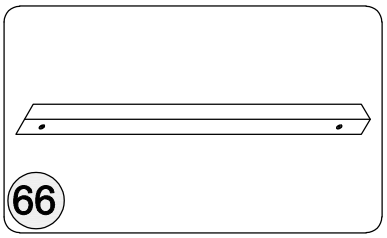

Layer board support strip
Qty: 4

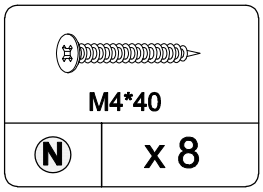

1. Align the two ends of component 66 with the front and rear components vertically, and then install it with hardware N

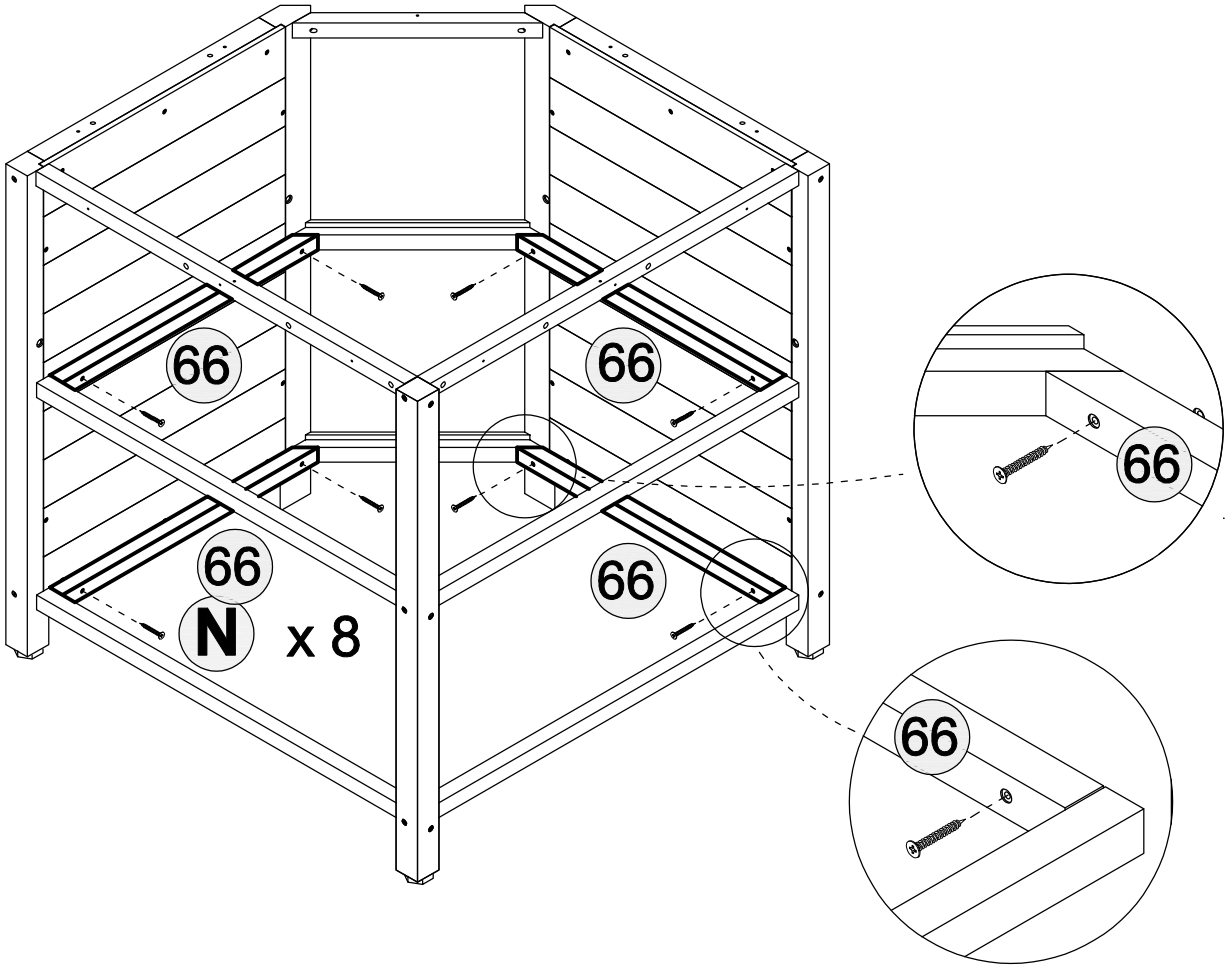

Layer board installation

Step 12

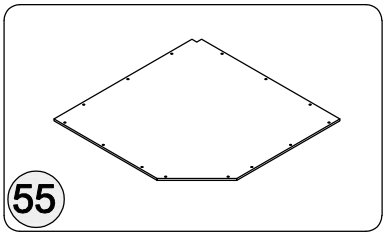

shelf board

Qty: 1

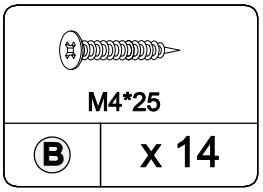

1. Insert component 55 and install it with hardware B

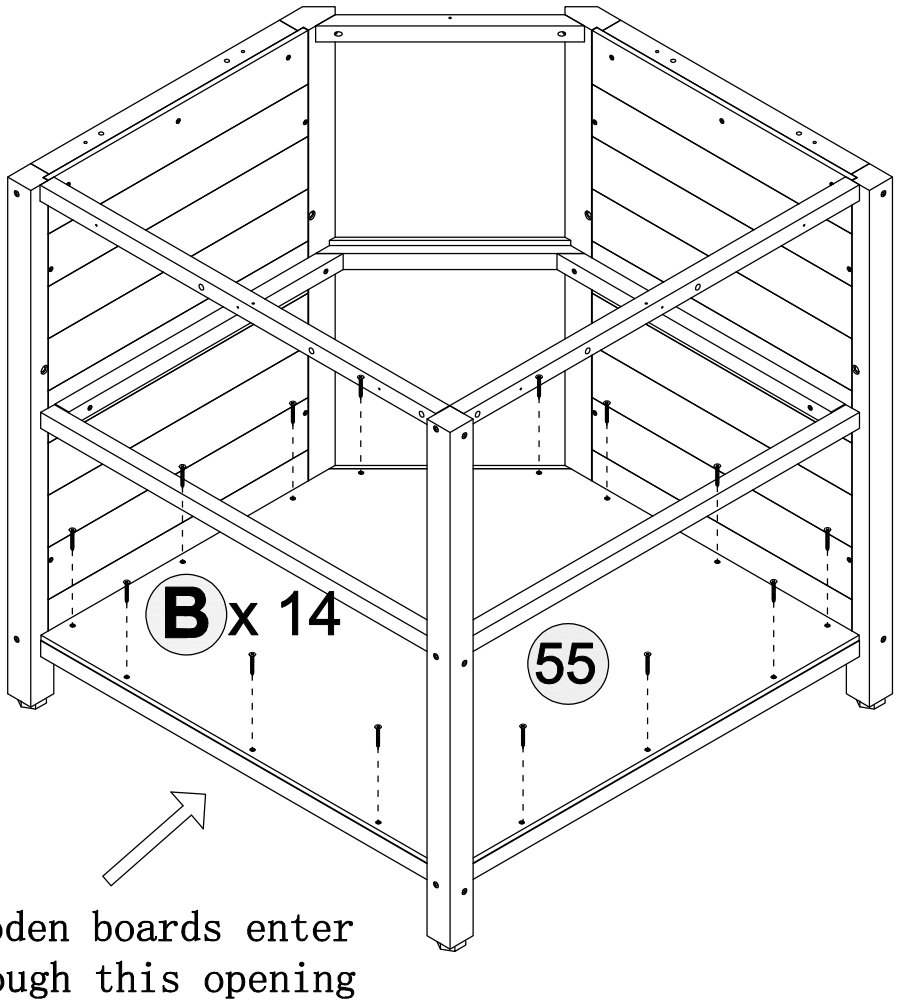

Layer board installation

Step 13

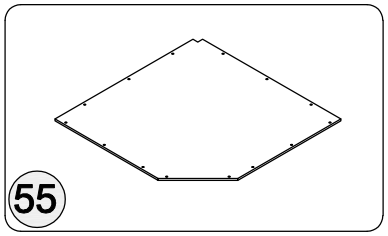

shelf board

Qty: 1

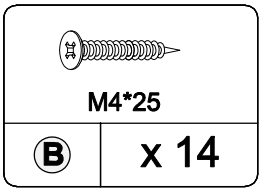

1. Insert component 55 and install it with hardware B

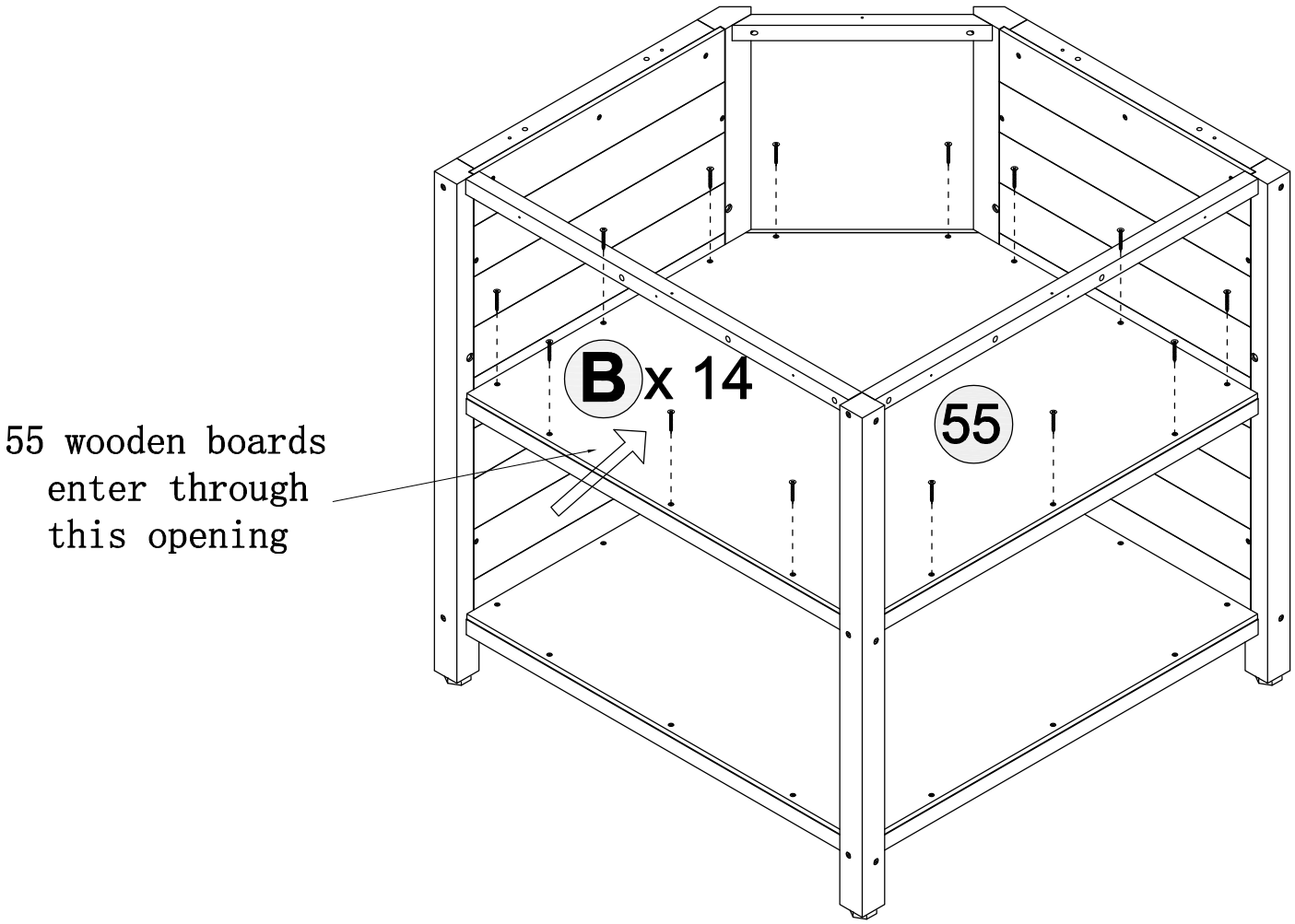

panel mounting

Step 14

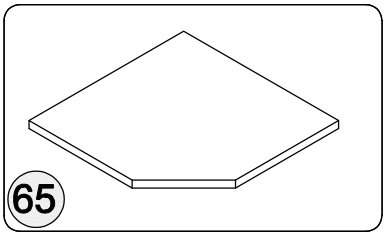

panel

Qty: 1

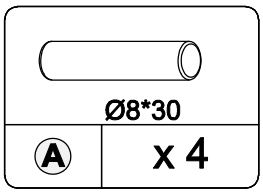

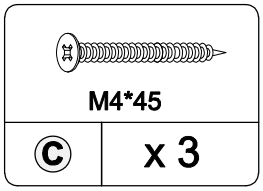

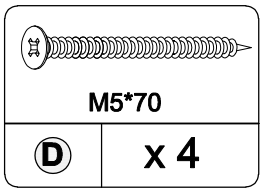

1.Connect with hardware A first, then install with hardware D,hardware C

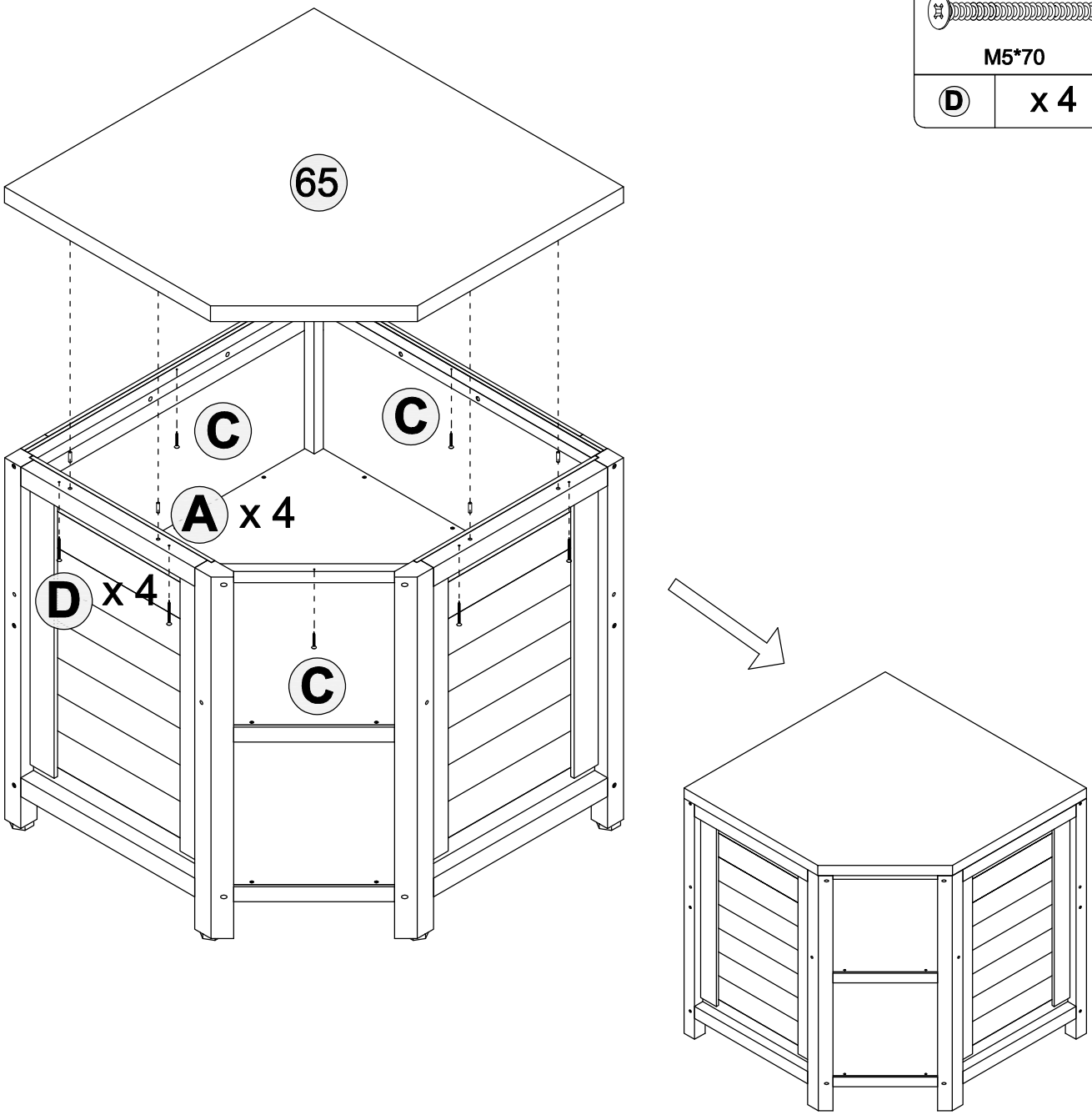

rear panel mounting

Step 15

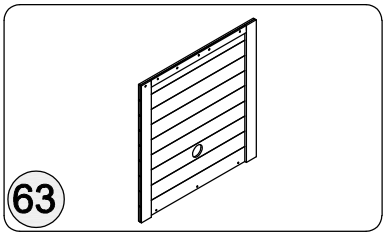

Left backboard
Qty: 1

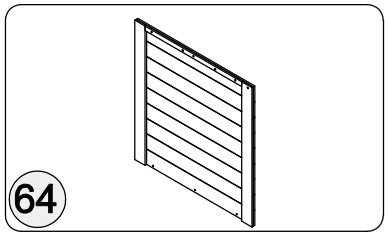

Right backboard
Qty: 1

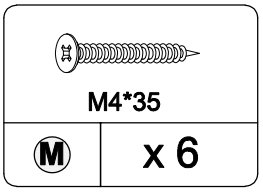

1. First, use hardware M to pass through components 63 and 64 and install them with their faces facing the lead holes

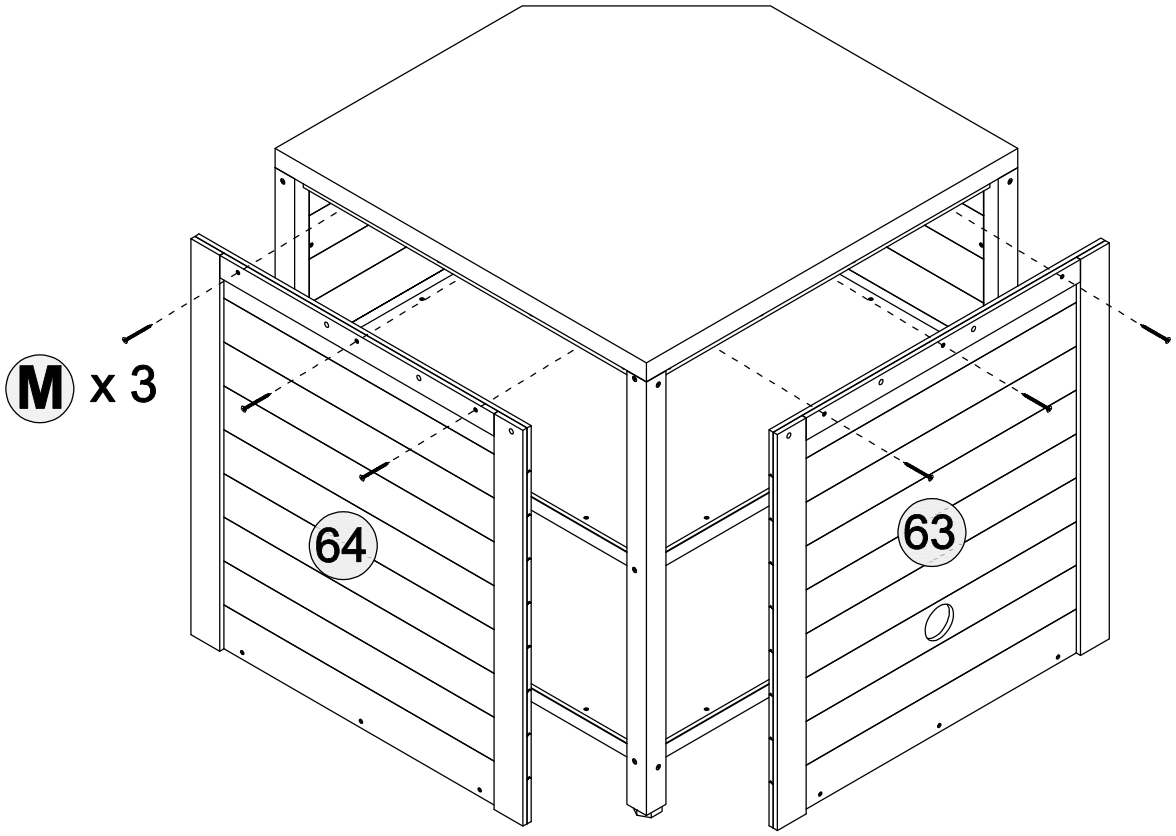

rear panel mounting

Step 16

M4*25	
B	x 6

K	x 1

1. After aligning components 63 and 64, install the holes below with hardware B
2. Install hardware K into the ventilation hole

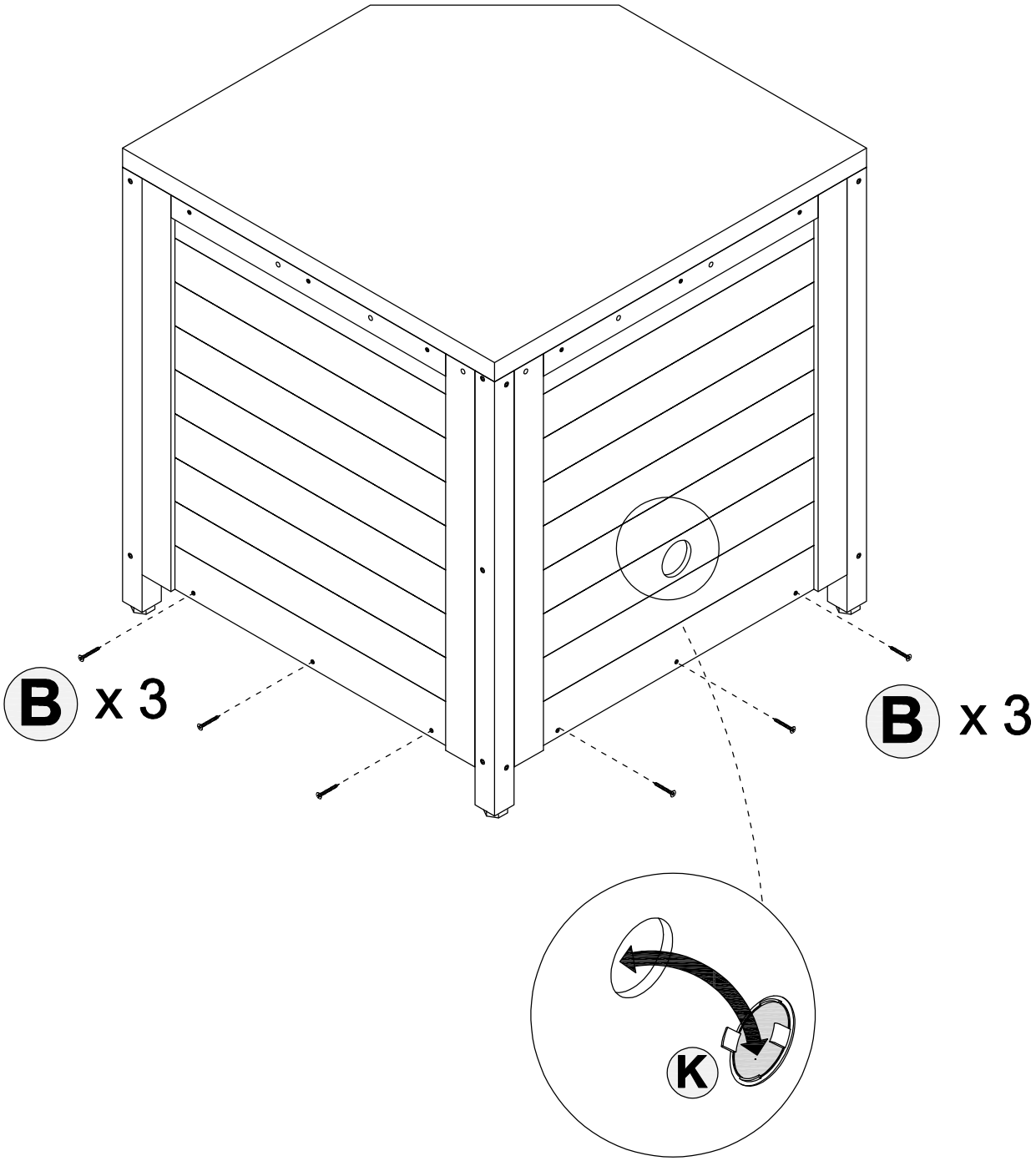

Cabinet connected to cabinet

Step 17

1,First, place hardware V into the hole and use tool S to connect hardware U with hardware V

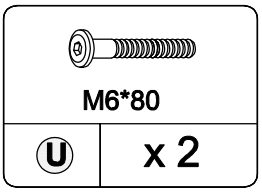

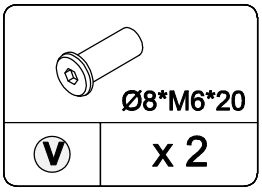

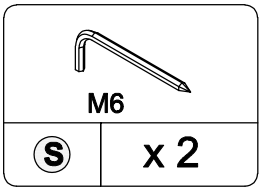

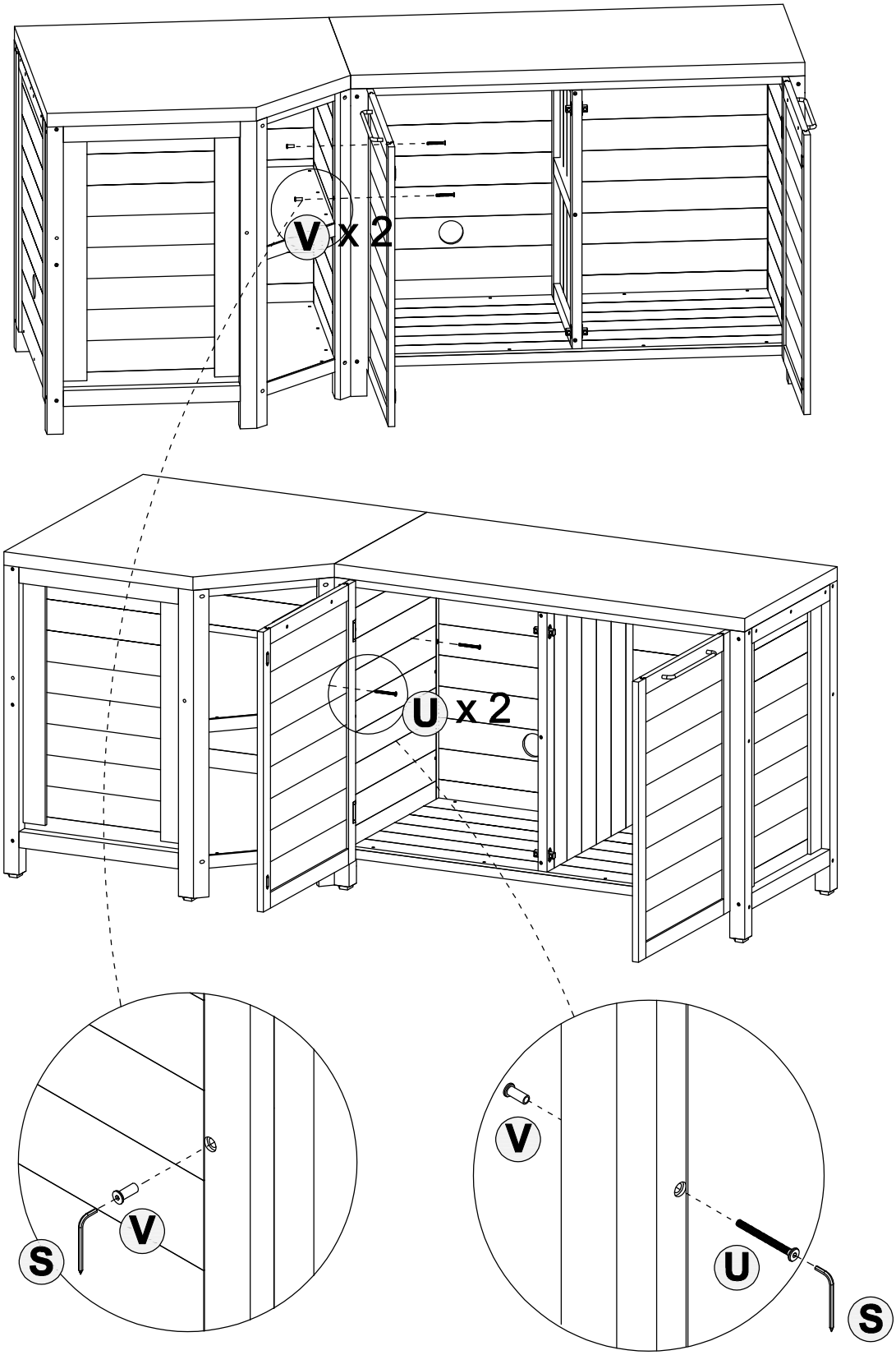

WARRANTY

WARRANTY CLAIMS

•There is a 30-day warranty for broken furniture or any other problems that do not work properly. The warranty will start from the date of purchase which must be verified by proof of purchase.

•Before making a claim, we may be able to answer your query, simply call us. Please leave your purchase order number, along with some details of the problem, if you want a replacement part. We will arrange within 48 hours. If there is out of stock, we will reply with a shipping date.

•The product must be used in accordance with the instructions provided. For health reasons.

•For other reasons, if the furniture needs to be returned, it must be cleaned and dried and operated within 30 days of receipt.

Type of Warranty Claim

•Failure to follow the furniture instructions will invalidate the warranty. Attention please.

•Does not include damage during installation, but includes damage during transportation.

Scope of responsibility

•Shall not bear any responsibility for misuse or user damage and / or loss of parts during the installation of furniture.

•After using, the damage and scratches of the furniture are not covered by the warranty.

The Warranty Relates to All Bought in The Us and Covers The Following Areas

•Sheet parts: 1 month from the date of purchase.

•Electrical parts: 1 month from the date of purchase.

RETURNS

CHANGED YOUR MIND AND NEED TO RETURN YOU ITEM?

PLEASE FOLLOW THE BELOW INSTRUCTIONS:

- If you have purchased and have simply changed your mind, follow the retailer's instructions for returns.

DEFECTIVE ITEMS

- If your item is defective in any way, i.e. it doesn't work but you can't identify why, in the first instance, please call us.

DAMAGED ITEMS

- If you receive an order with obvious shipping damage from the retailer, then we suggest the delivery is refused. If the delivery has been accepted and then shipping damage is found, please follow the specific instructions advised by the retailer.
  In all circumstances please save all packaging material and paperwork for the order. Please be aware that if you dispose of packaging material or attempt to return the merchandise without contacting the fulfiller, you jeopardise your chances of making a claim, and you may not receive a credit for the return.

AFTER-SALES CONTACT

adelahu@fufugaga.com

208-820-0068
208-820-0799