# INSTALLATION INSTRUCTIONS

**PARTS LIST**

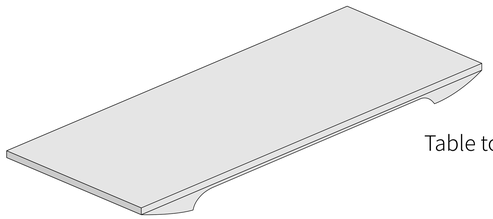

Table top

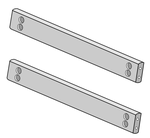

Connecting plate x2

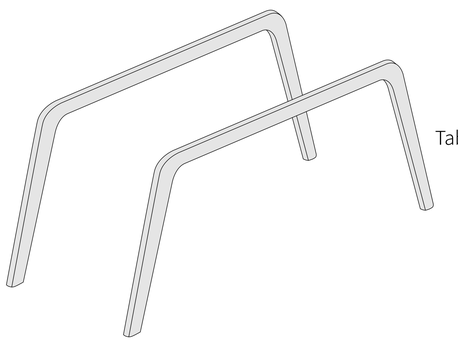

Table leg x2

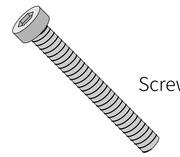

Screw x6

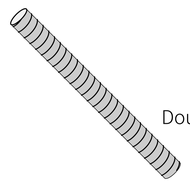

Double head screw x8

Gasket x14

Nut x8

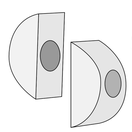

Semicircular connector x8

The extra parts are for spare

## MARBLE CLEANING. MAINTENANCE. PRECAUTIONS

· REGULAR CLEANING:

The marble should be cleaned with special cleaning agents to avoid damaging the surface structure. In general, a neutral cleaner, such as alcohol or warm water, should be used and then wiped with a clean cloth to maximize the cleaning of the surface

· DECONTAMINATION:

To remove dirt on the marble, you can use a one-time wet, and then rinse it off with water. If there is oil, you can use dish soap, but be careful not to use too much, So as not to break the internal structure of the marble.

· MAINTENANCE:

The marble should be regularly maintained with paraffin wax to increase the surface light, and to effectively protect the surface from pollution erosion. In addition, it is also important to polish the marble regularly to maintain the finish and water resistance.

·NOTE:

When cleaning, note: do not use detergent containing acid components, do not use metal or other hard objects to clean the marble, so as not to wear the surface.

**STEP 1**

Place the "semi-circular connector" into the hole of the "connection plate"

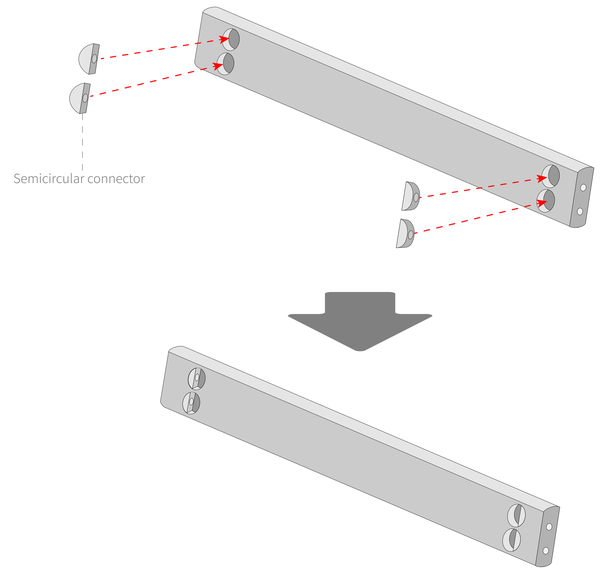


**STEP 2**

Place the table legs bottom up on the ground

The "connecting plate" and the "table leg" are joined together with "double-headed screws",
one end of which passes through the semi-circular connector

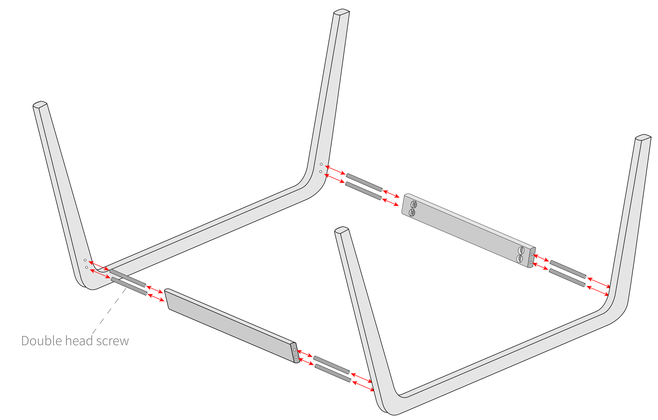


**STEP 3**

Use the "gasket" and "screw" to secure the double-headed screws

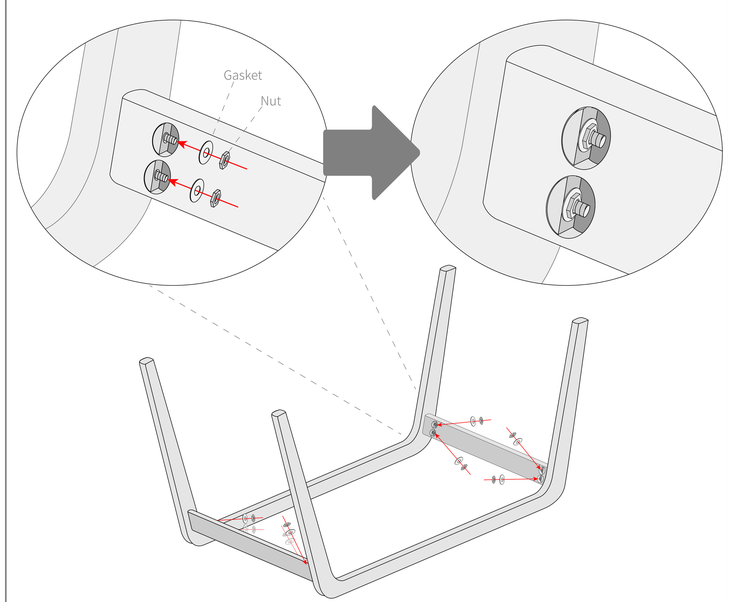


**STEP 4**

Turn the "Table leg" and "Table top" upside down and place them on the ground.
Place the "Table leg" on the back of the "Table top", aligned with the holes

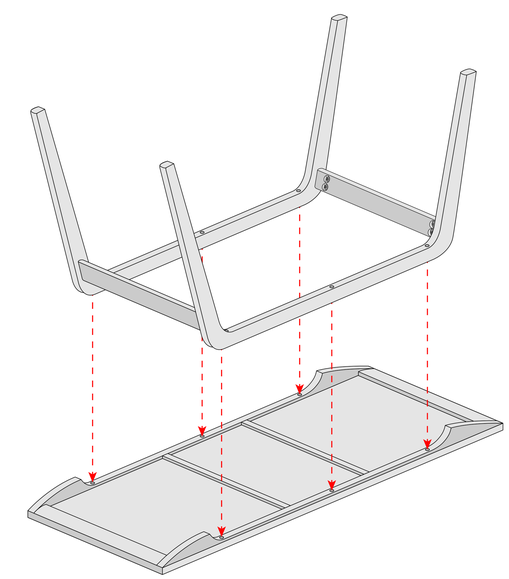

**STEP 5**

Install with screws and gaskets

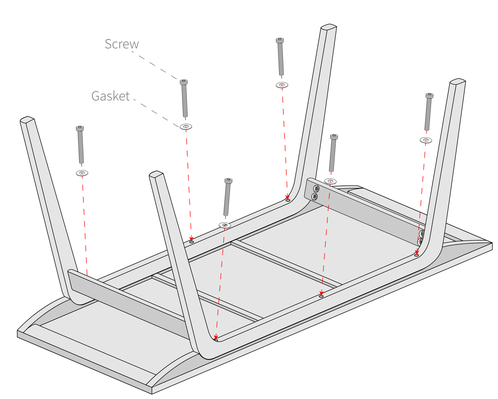

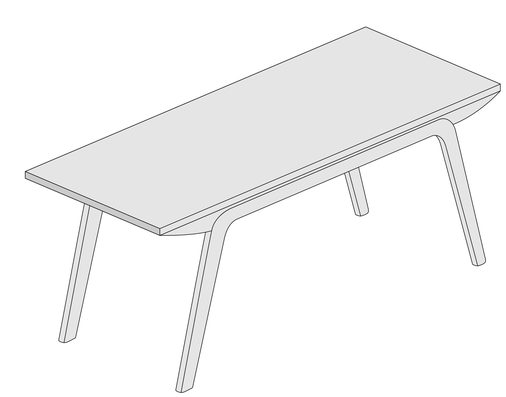
**Installation complete**