Assembly Instruction

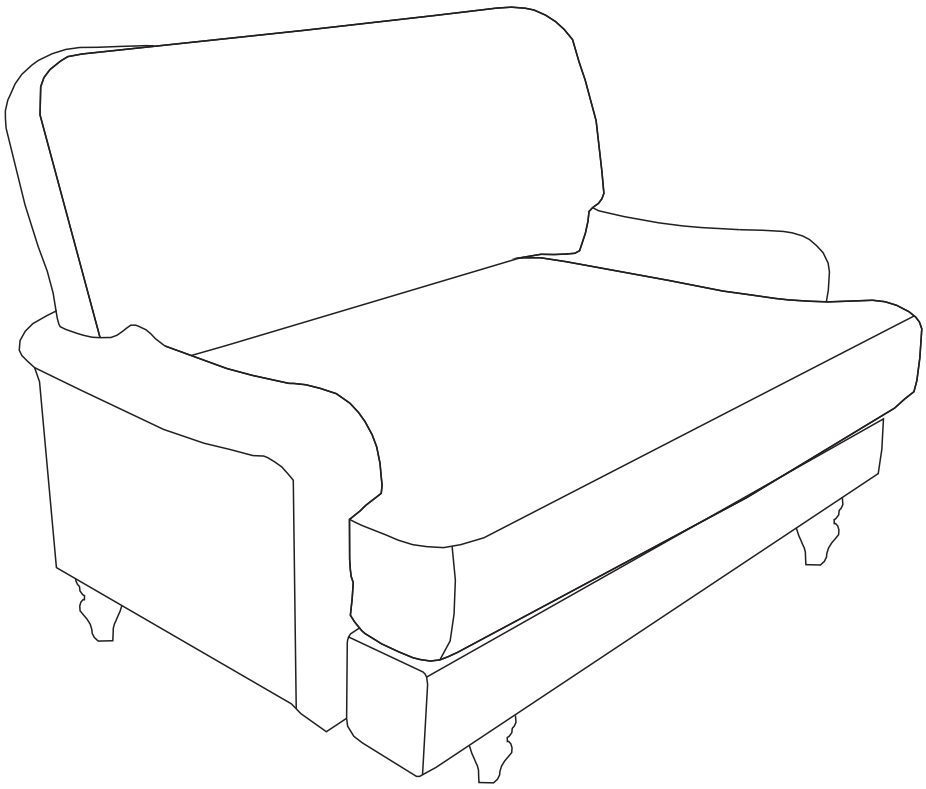

Thank you for your purchase.

If you have difficulty with assembly or find a part is missing or damaged, please don't hesitate to contact us for solution.

Customer Service team will work hard to put a smile back on your face.

Components

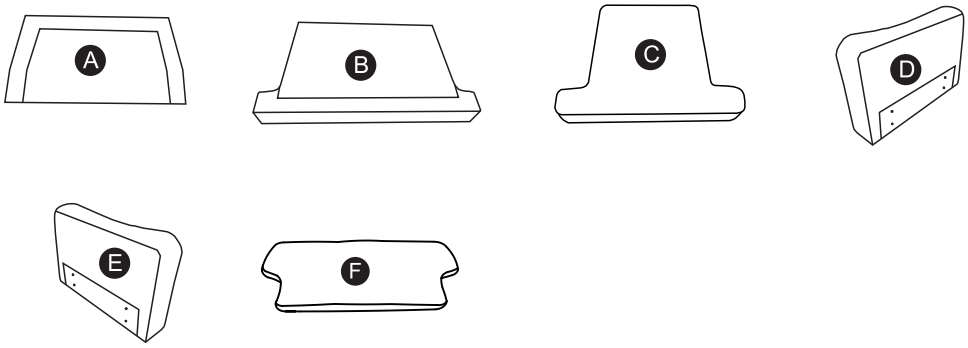

NO	PARTS	QTY
A		1 PC
B		1 PC
C	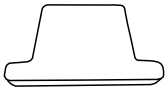	1 PC
D	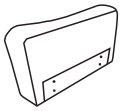	1 PC
E	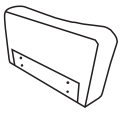	1 PC
F		1 PC
G		2 PCS
H		2 PCS
I		4 PCS
J		12 PCS+1 PC
K		12 PCS+1 PC
L		1 PC

Components

STEP 1

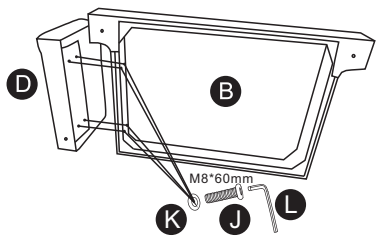

STEP 2

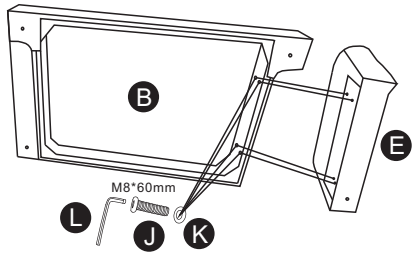

STEP 3

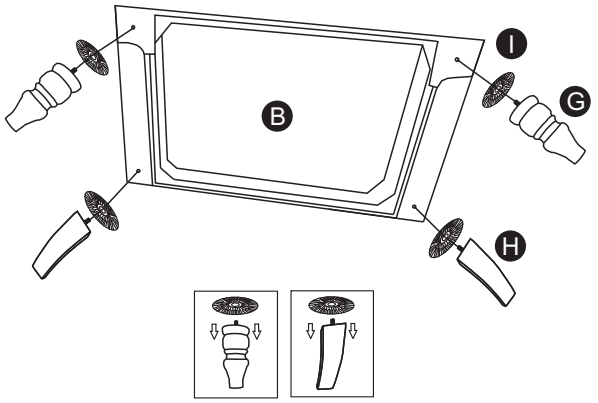

STEP 4

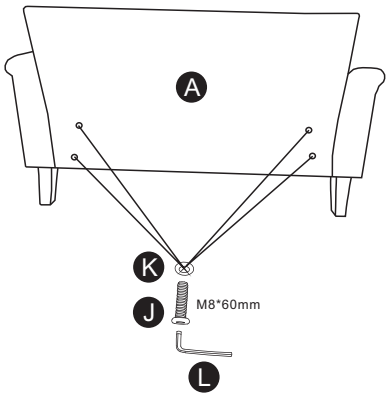

STEP 5

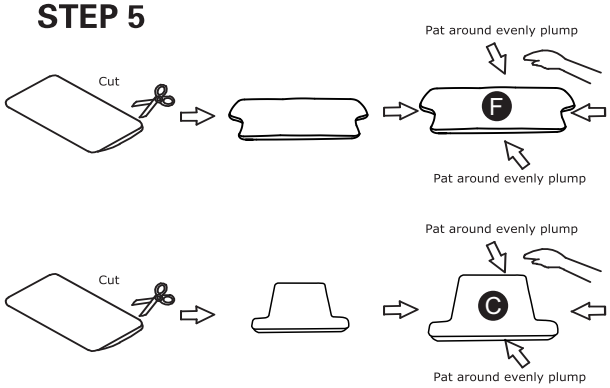

STEP 6

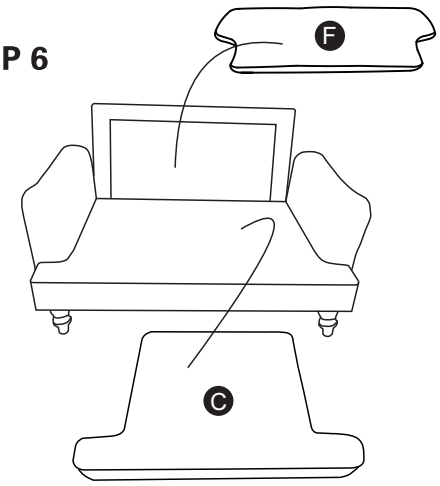
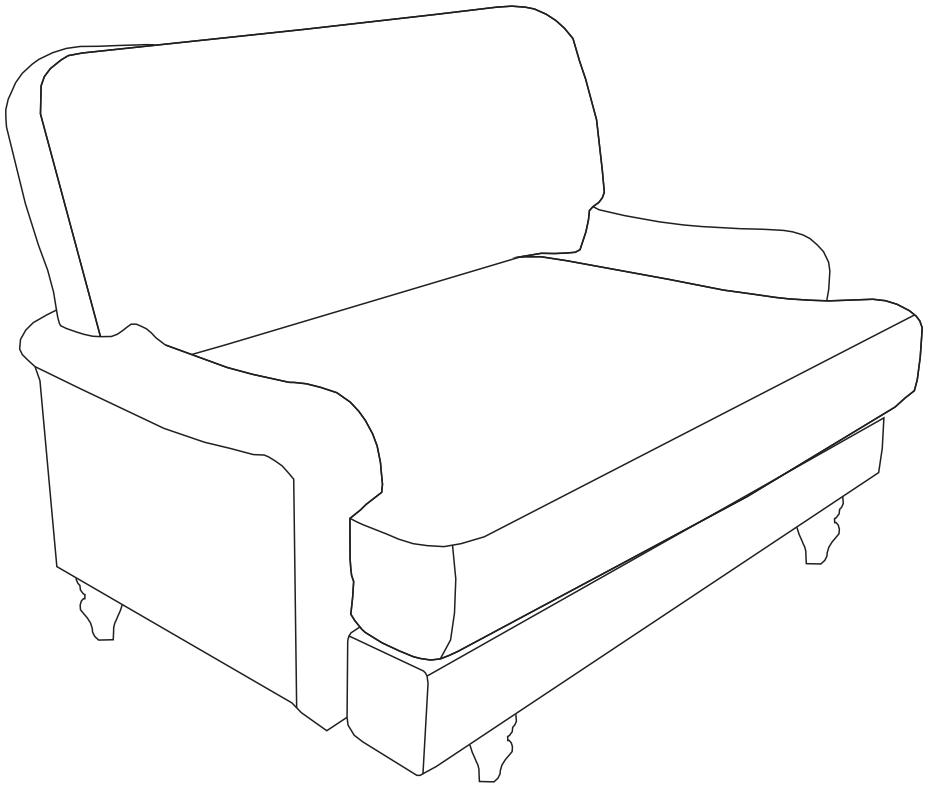
STEP 7