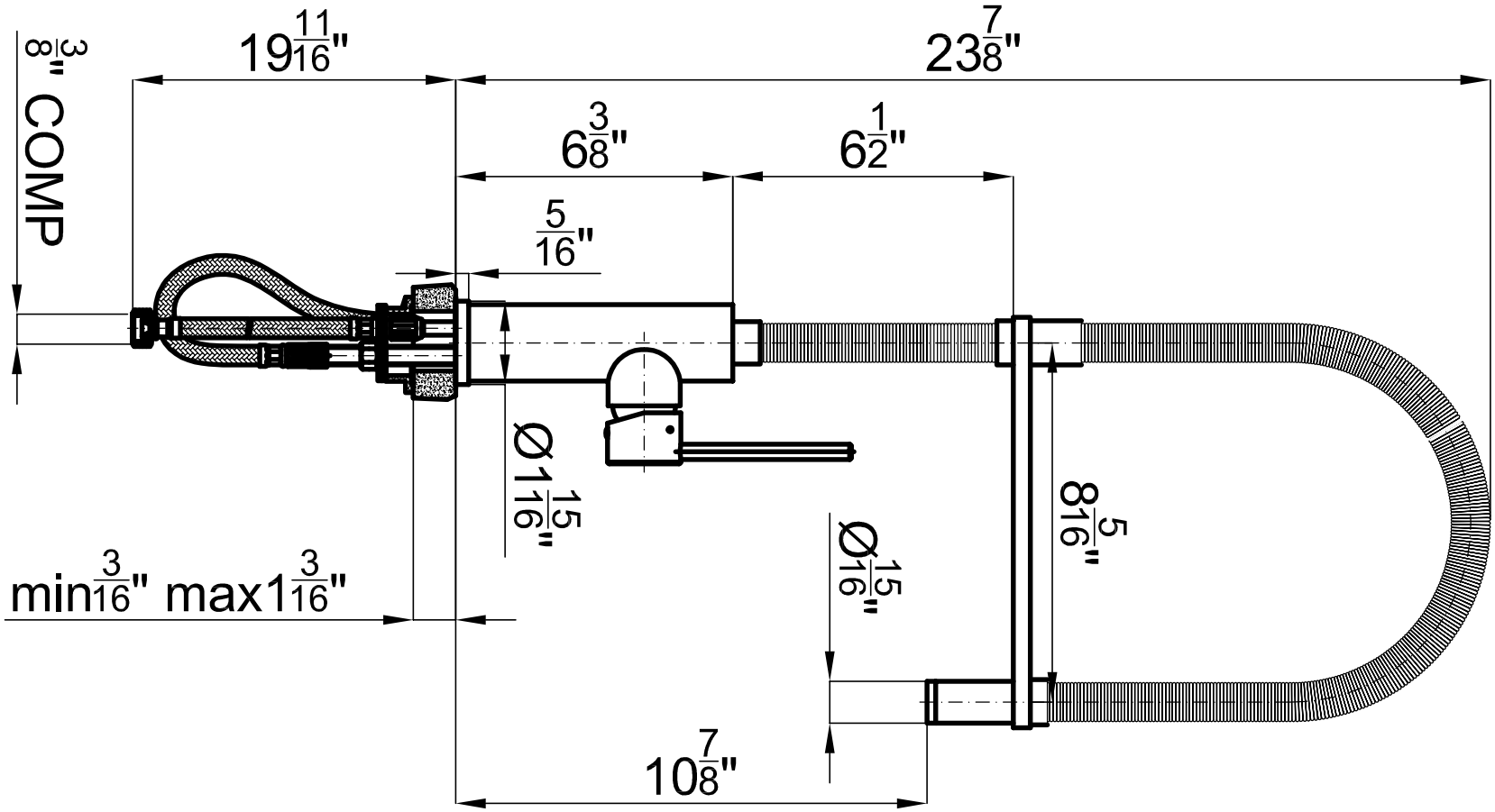
3/8" COMP
19 11/16"
23 7/8"
6 3/8"
6 1/2"
5/16"
Ø1 15/16"
8 5/16"
Ø15/16"
min 3/16" max 1 3/16"
10 7/8"