REV	CHANGES	LOC	BY	DATE
A				
B				

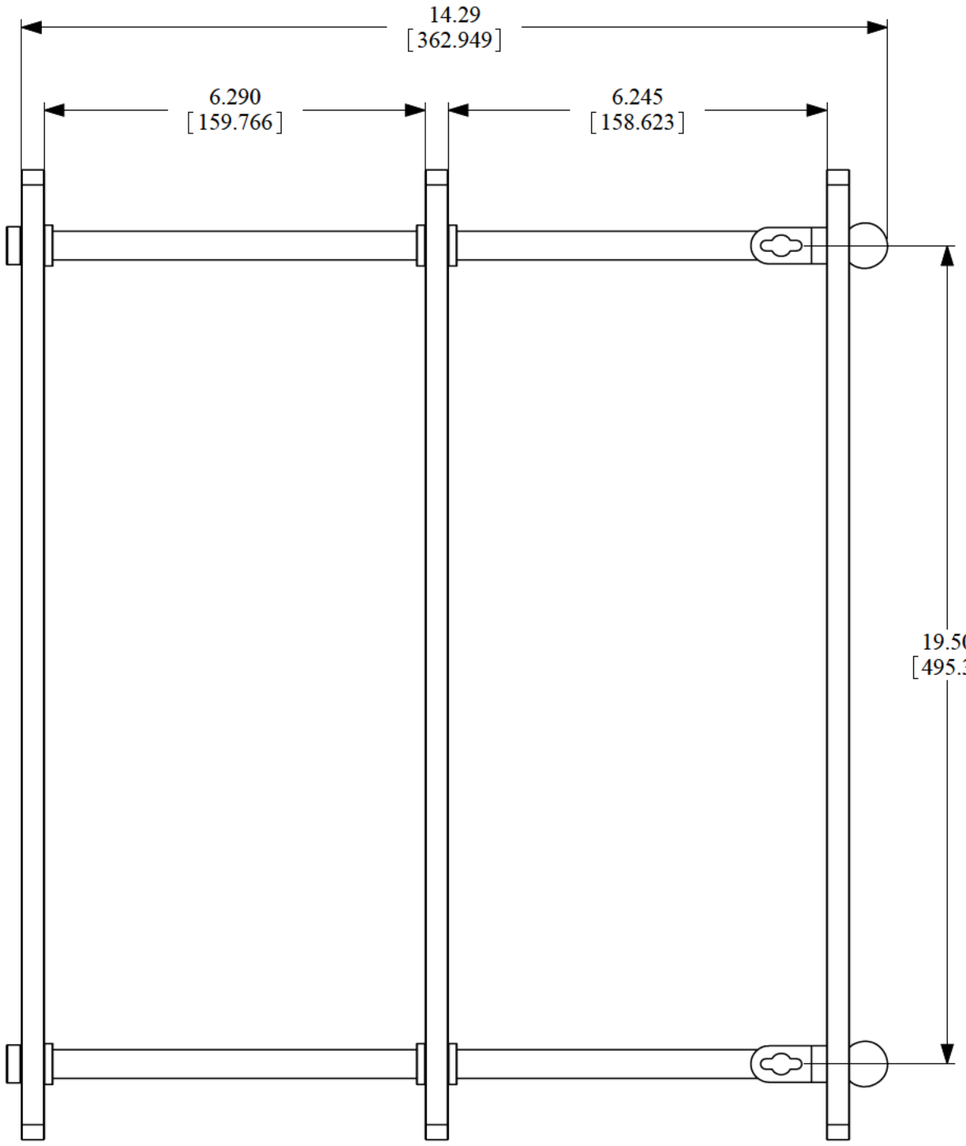

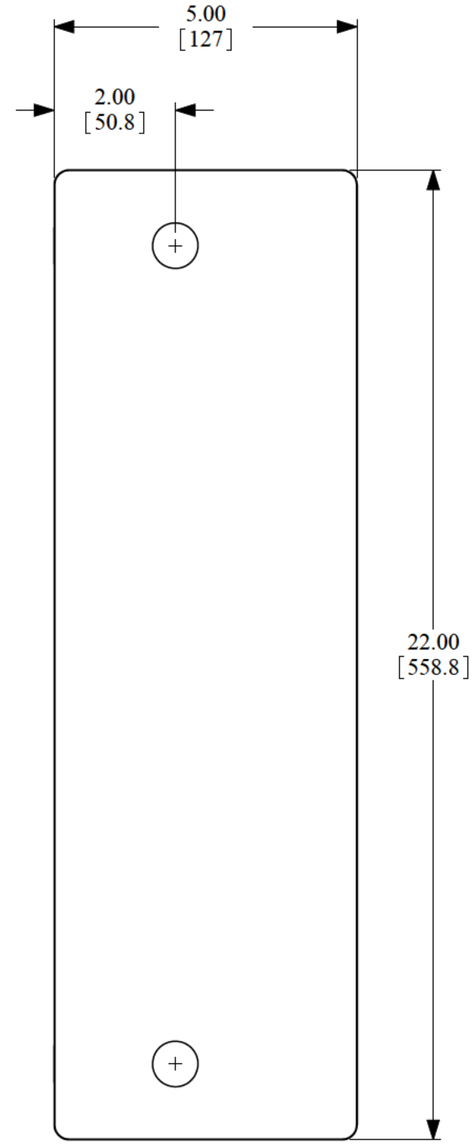

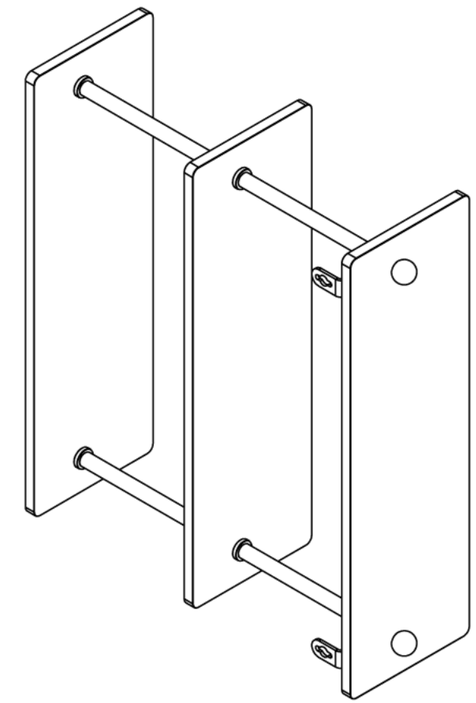

UNIT: INCH	MATERIAL: TBD		
TOLERANCES UNLESS OTHERWISE SPECIFIED	FINISH: TBD		
ANGULAR ±1.0°	SCALE: 1:2.5	SHEET: 1 OF 1	
DECIMAL X ±.01	DRAWN BY:	DATE:	PART NAME:
DECIMAL XX ±.001			
DECIMAL XXX ±.0001	APPROVED BY:	DATE:	PART NUMBER: REV