ASSEMBLY INSTRUCTIONS

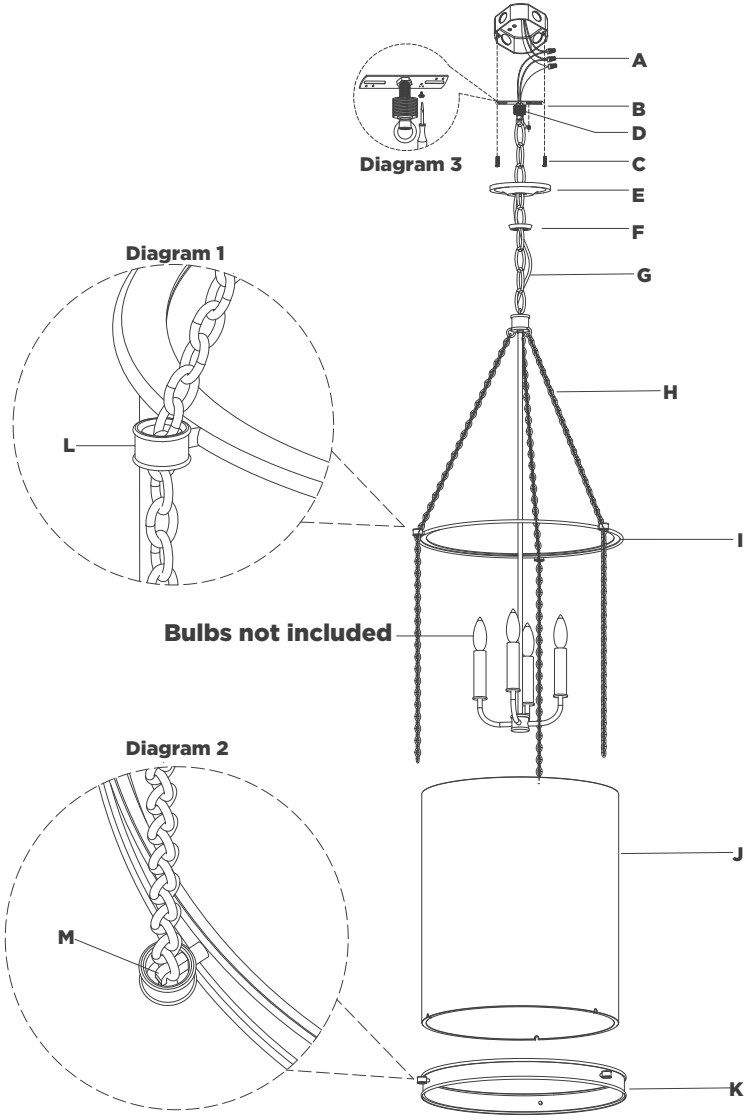

Reese 17" Lantern

Item # MF5188

NOTICE:

This light fixture should be installed in accordance with all applicable, local installation codes, and by a person familiar with the construction and operation of it, as well as the hazards involved. Inspect item and contents carefully. If any damage or defect is found, do not install. Retain all packaging material until installation is complete and approved.

TOOLS REQUIRED (NOT INCLUDED):

Phillips Screwdriver	Slotted Screwdriver	Wire Strippers
Slip Joint Pliers	Measuring Tape	Chain Pliers
Wire Cutters		

---

1. Carefully remove all parts from the box. Place on a clean, soft surface.
2. Place shade **(J)** to top of bottom metal ring **(K)**.
3. Feed chains **(H)** to loops **(L)** on top metal ring **(I)**, then attach chains to looks **(M)** on bottom metal ring **(K)** (see diagram 1 & 2).
4. Remove mounting plate **(B)** from collar loop **(D)** by unscrewing.
5. Determine desired overall length, and amount of chain **(G)** needed. Shorten chain **(G)** using chain pliers (Keep extra chain).
6. Thread fixture wire and ground wire through chain **(G)**.
   NOTE: When you reach the collar loop **(D)**, ensure there is no tension on the wires. Cut excess wires, being sure to leave enough to reach the junction box.
7. Separate two sides of molded wire, and strip insulation on each 5/8".
8. Twist all fixture wires together. Slip through center hole of collar loop **(D)**.
   NOTE: Untwist wires and separate to prepare for connection.
9. Add collar ring **(F)** and canopy **(E)** to chain **(G)** and slip down carefully.

ASSEMBLY INSTRUCTIONS

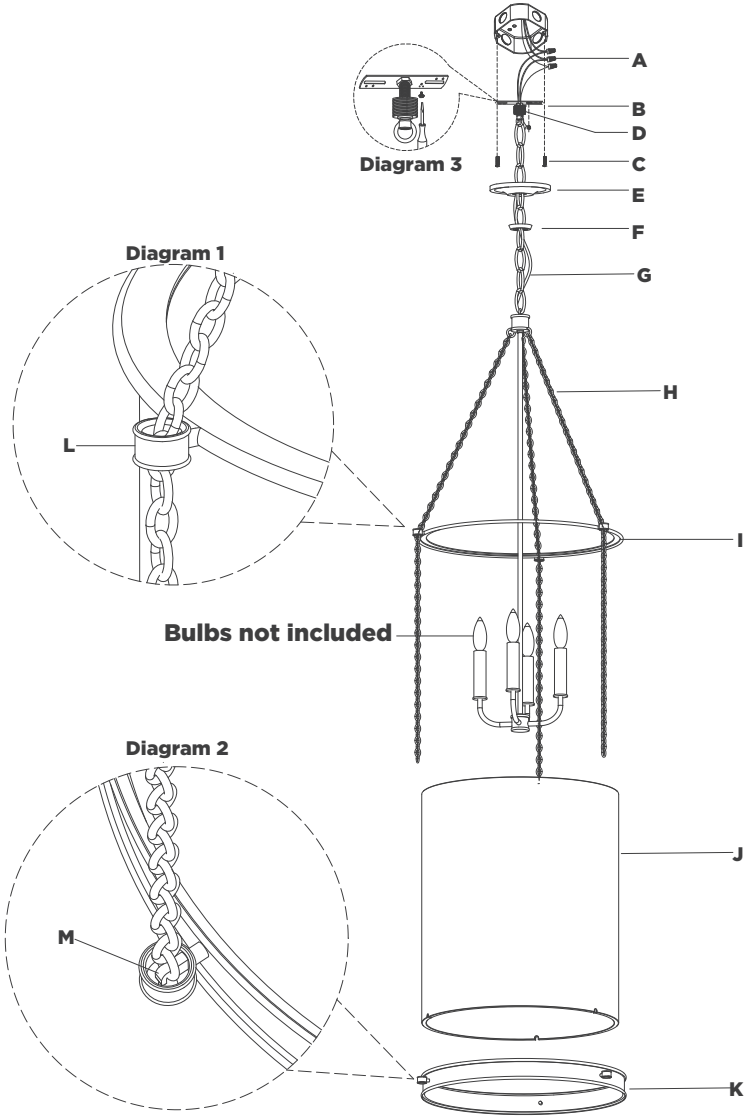

Reese 17" Lantern

Item # MF5188

NOTICE:

This light fixture should be installed in accordance with all applicable, local installation codes, and by a person familiar with the construction and operation of it, as well as the hazards involved. Inspect item and contents carefully. If any damage or defect is found, do not install. Retain all packaging material until installation is complete and approved.

---

10. Secure collar loop **(D)** to mounting plate **(B)** using pliers to tighten locknut.
11. Install mounting plate **(B)** to the junction box and secure with mounting screws **(C)**.
12. Wrap fixture ground wire (bare copper) around the green grounding screw (see diagram 1). Tighten. Continue fixture ground wire and connect to supply ground wire (usually green or bare copper) using wire nut **(A)**.
    NOTE: It is imperative that the fixture is grounded.
13. Connect fixture neutral wire (ribbed) to the supply neutral wire (usually white) using wire nut **(A)**.
14. Connect fixture hot wire (smooth with markings) to the supply hot wire (usually black) using wire nut **(A)**.
    CAUTION: Do not reverse the hot and neutral connections.
15. Make sure all wire connections are tight, then carefully tuck into the junction box.
16. Install canopy **(F)** to collar loop **(D)** and secure with collar ring **(G)**.
17. Install light bulbs into the sockets.

CARE INSTRUCTIONS: Clean only with a soft dry cloth or feather duster. Do not use abrasive or chemical agents.