ARTERIORS

ICELAND LAMP

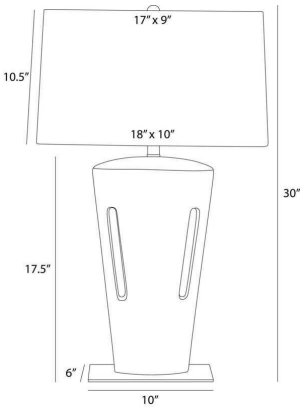



PTS20-517
H: 30 IN, W: 18 IN, D: 10 IN,
Shoreline Reactive Porcelain

The angular form of our porcelain style offers an intriguing mix of positive and negative space, with a cross-hatched texture that emphasizes its craft. Cutout slots provide added interest, while the shoreline reactive glaze offers a gradient finish that shifts from deepest black to pure ivory. Finished with bronze steel base, an off-white microfiber rectangular drum shade lined in off-white cotton and an antique brass sphere finial. Finish will vary.

APPEARANCE

Material	Porcelain, Steel, Microfiber, Cotton
Finish	Shoreline Reactive, Bronze, Antique Brass, Off-White
Finish Will Vary	Yes
Top Coat/Sealant	No
Finial Description	Antique Brass Sphere

DIMENSIONS

Base	H: 0.25 IN, W: 10 IN, D: 6 IN
Body	H: 17.5 IN, W: 10 IN, D: 4.5 IN
Foot Print	W: 10 IN, D: 6 IN
Neck	H: 2 IN, Dia: 1.25 IN
Shade Bottom	W: 18 IN, D: 10 IN
Shade Side	H: 10.5 IN
Shade Top	W: 17 IN, D: 9 IN
Harp Size	9" Brass IN

WIRING

Rating	Indoor Only
Tilt Test	10 Degrees - AU
Cord	10 FT, Back of Lamp Base, Clear/Silver, SPT-2
Socket	1, Type A - E26
Switch	At Socket, 3-Way Rotary
Maximum Watt	150
Voltage	110-120 V

CERTIFICATIONS

Certifications	Mexico, United Arab Emirates, United Kingdom, United States, Canada, Australia

COMPLIANCY

UL/ETL	Yes
CB	Yes
RoHS	No

SHIPPING

Shipping Requirements	Prop65
Product Weight	4.4 lbs
Gross Weight 1	8 lbs
Gross Weight 2	13 lbs
Shipping Box 1	H: 24.5 IN, L: 14 IN, W: 8.5 IN
Shipping Box 2	H: 33.46 IN, L: 21.65 IN, W: 19.29 IN

ADDITIONAL INFO

Shade Shape	Rectangle
Shade Trim	Rolled Edges
Shade Type	Hardback

REPLACEMENT PARTS

Replacement Part 1	81002

CONTRACT

Contract Suitable	Yes