Assembly Instructions

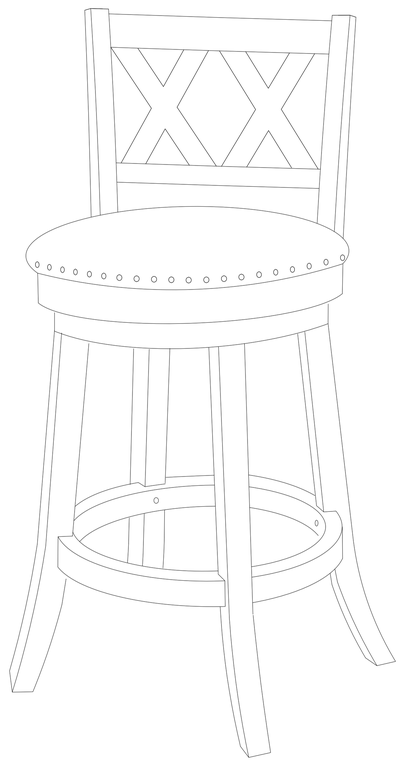

READ & SAVE THESE INSTRUCTIONS:

Please read instructions carefully and identify all parts before assembly

- Assemble your unit in area free from any objects that might scratch the surface of your unit
- Examine all packing materials before discarding, shortages may occur from parts left in the packing material
- Follow step by step instruction

PART LIST:

A	Backrest	1 PC
B	Leg	4 PCS
C	Footrest	1 PC
D	Apron	1 PC
E	Cushion with Apron	1 PC

HARDWARE LIST:

1	JCBC Screw M6 x 25mm	4 PCS
2	JCBC Screw M6 x 40mm	10 PCS
3	Spring Washer M6 x 13mm	14 PCS
4	Flat Washer M6 x 16.5mm	14 PCS
5	Allen Key Small M4 x 110mm	1 PC
6	JCBC Screw M6 x 35mm	4 PCS

A

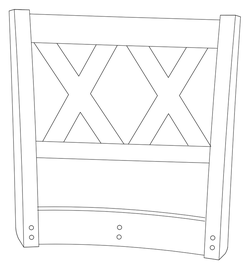

B

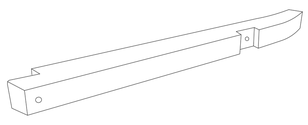

C

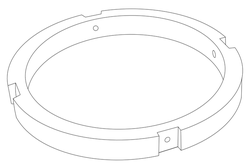

D

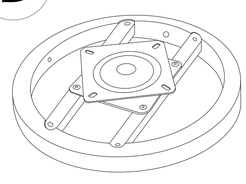

E

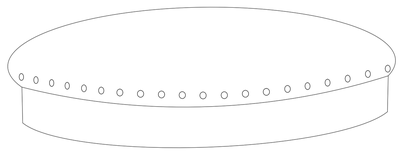

IMPORTANT NOTE:

- Place all wooden parts on a clean and smooth surface such as a rug or carpet to avoid the ports from being scratched. Check to be sure that you have all parts and hardware. Remove all wrapping materials, including staples & packing straps before you start to assemble. Do not tighten all screws/bolts until all completely assembled.
- Keep all hardware parts out of reach of children.
- **DO NOT TIGHTEN BOLTS/SCREWS UNTIL ALL COMPLETELY ASSEMBLED.**

Assembly Instructions

STEP 1

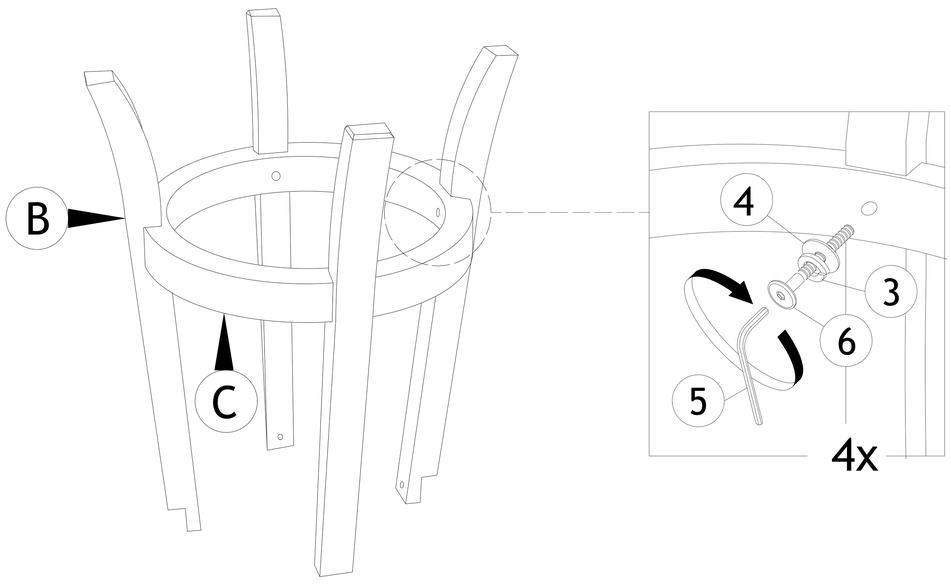

Attach part(B) with part(C). Insert each individual set of hardware as per picture shown. Do not tighten any hardware completely!

STEP 2

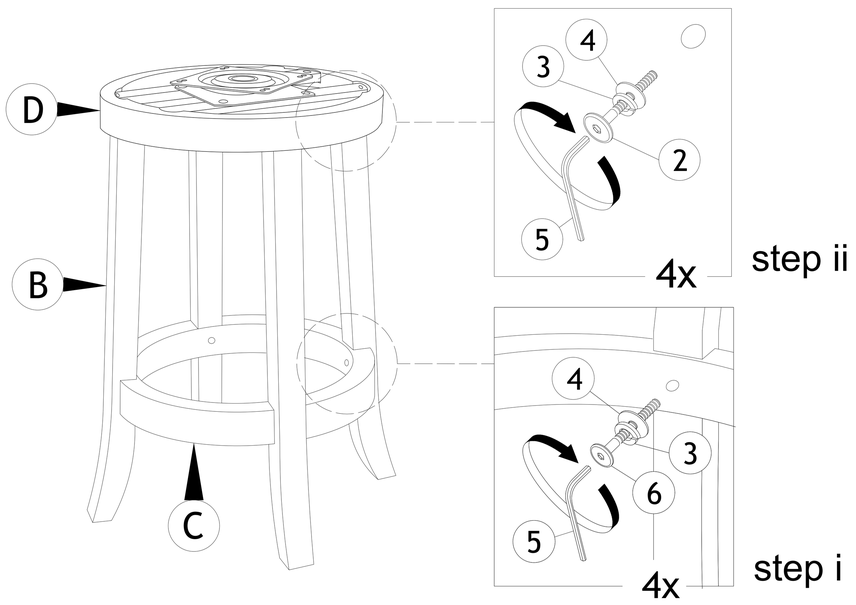

Attach part(B) with part(D). Tighten part(B) with part(C) first, then tighten part(B) with part(D) completely.

STEP 3

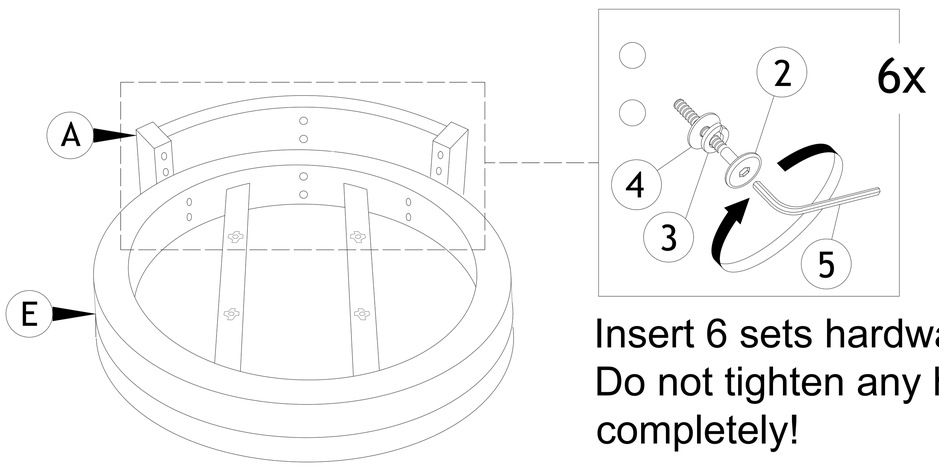

Insert 6 sets hardware.
Do not tighten any hardware completely!

STEP 4

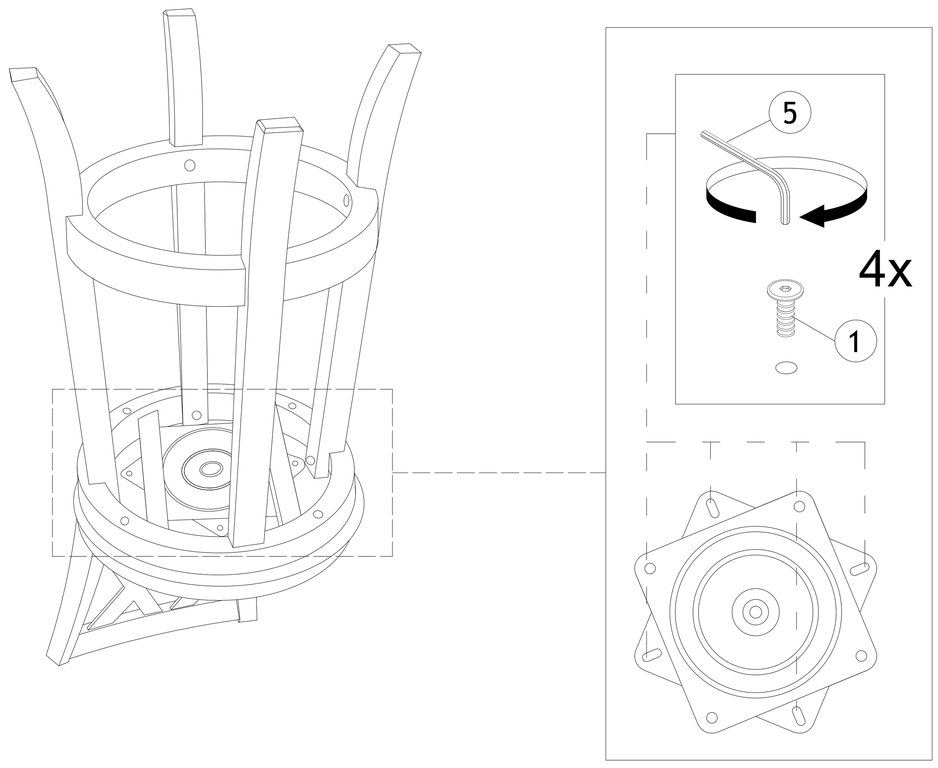

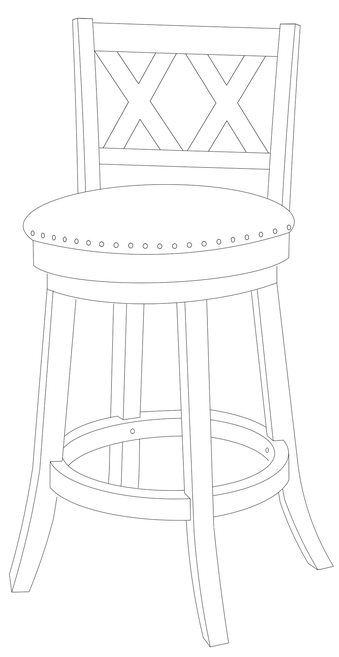

COMPLETE ASSEMBLY

CARE AND MAINTENANCE

- The touch of a soft cloth is all the maintenance your wood pieces will ever need. Never use harsh chemicals or abrasive cleaners, as they could mark or destroy finish.
- Bolts, screws, and nuts may loosen during everyday use. They should be periodically inspected and re-tightened. Always visually check that all hardware on the list is attached and kept tightened.