KJW.A071 Assembly Manual

Accent Chair

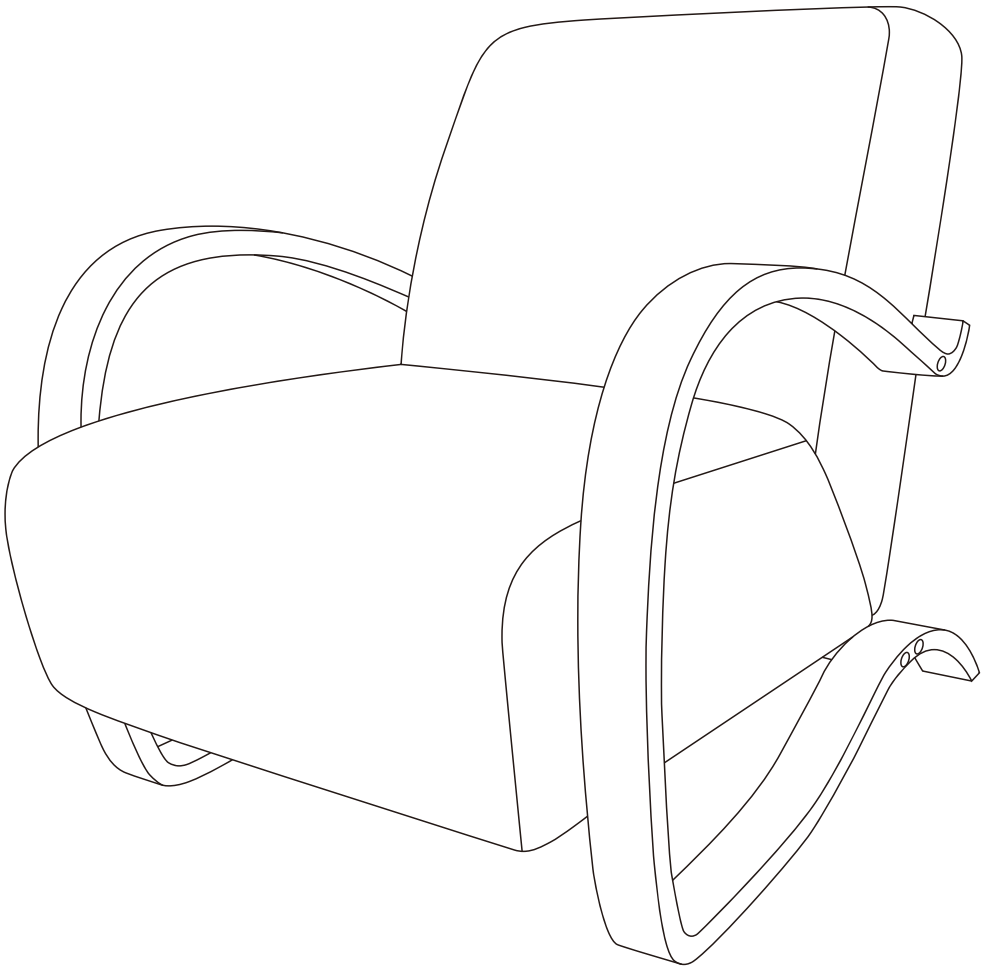

CAUTION

THIS ASSEMBLY MANUAL CONTAINS IMPORTANT SAFETY INFORMATION.
PLEASE READ AND KEEP FOR FUTURE REFERENCE.

Ax1 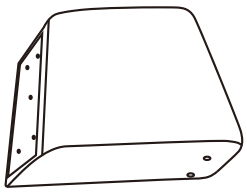 Seat Cushion	Bx1 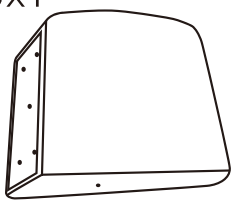 Backrest	Cx1 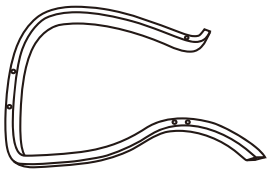 Left Armrest	Dx1 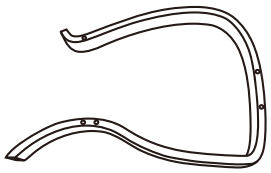 Right Armrest
Ex1  Crossbar	Fx6+1 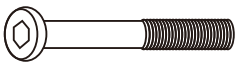 M8x100mm Bolt	Gx9+1  M8x60mm Bolt	Hx2+1  M6x45mm Bolt
Ix6+1  M8x14x1mm Flat Washer	Jx9+1 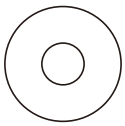 M8x22x1.5mm Flat Washer	Kx2+1  M6x18x1.5mm Flat Washer	Mx2+1  M6x2mm Spring Washer
Nx15+1 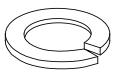 M8x2mm Spring Washer	Ox1 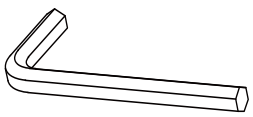 M6/5mm Allen Wrench	Px6+1  Decorative Cap	Qx2+1  M6x15x7.5mm Foot Leveler
Sx2+1  Felt Floor Protector			

Before you begin:

1.Check if you have received all parts using the diagram on this page. Do not start the assembly process until all parts are present. If you have not received all parts or received wrong or damaged ones, please contact our customer service and we will get back to you.

2.Do NOT discard any of the packaging until you are certain that you have all the necessary parts for the assembly.

3.Do NOT use power tools for assembly.

ASSEMBLY INSTRUCTIONS

1. Open the bottom zipper of the Seat Cushion (A). Attach the Backrest (B) to the Seat Cushion (A) using Bolts (G), Spring Washers (N), Flat Washers (J) and Allen Wrench (O). **Fully tighten.**

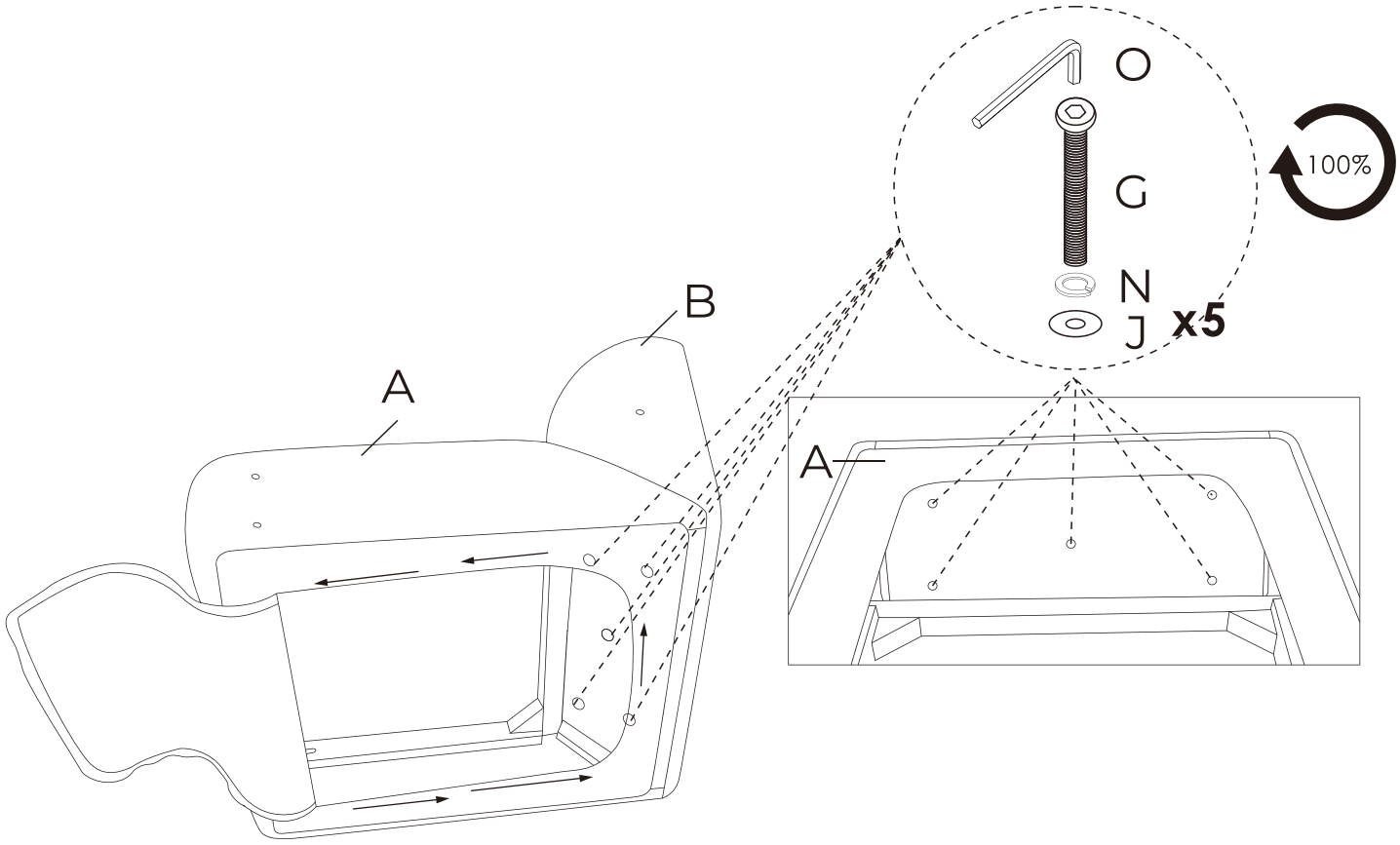

2 Attach the Crossbar (E) to the Seat Cushion (A) using Bolts (H), Spring Washers (M), Flat Washers (K) and Allen Wrench (O). **Do not fully tighten yet.**

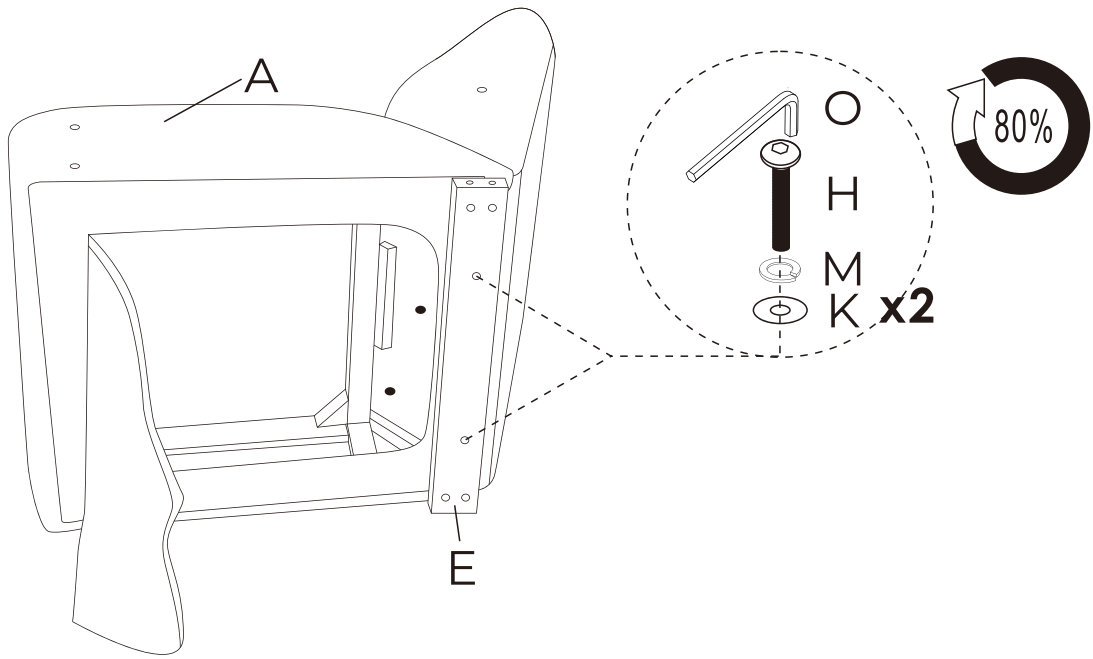

3 Attach the Left Armrest (C) to the Seat Cushion (A) using Bolts (G), Spring Washers (N), Flat Washers (J) and Allen Wrench (O). Then attach the Left Armrest (C) to the Backrest (B) and Crossbar (E) using Bolts (F), Spring Washers (N), Flat Washers (I) and Allen Wrench (O). **Do not fully tighten yet.**

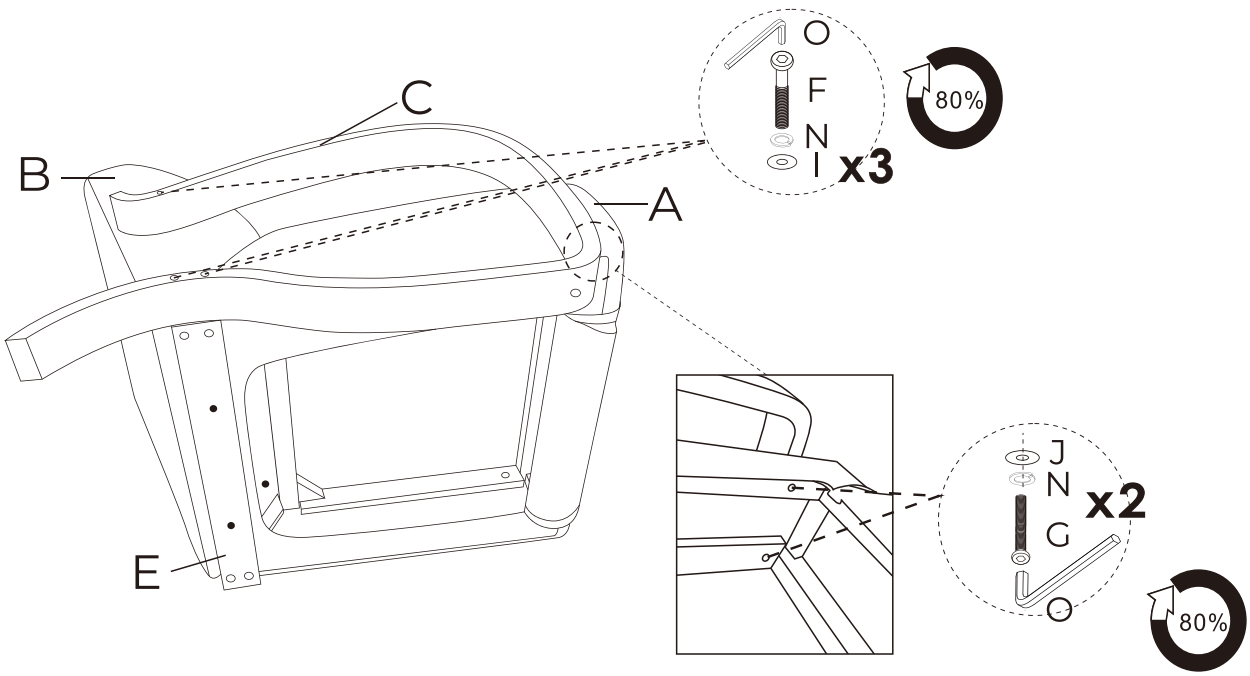

4 Attach the Right Armrest (D) to the Seat Cushion (A) using Bolts (G), Spring Washers (N), Flat Washers (J) and Allen Wrench (O). Then attach the Right Armrest (D) to the Backrest (B) and Cross-bar (E) using Bolts (F), Spring Washers (N), Flat Washers (I) and Allen Wrench (O). **Do not fully tighten yet.**

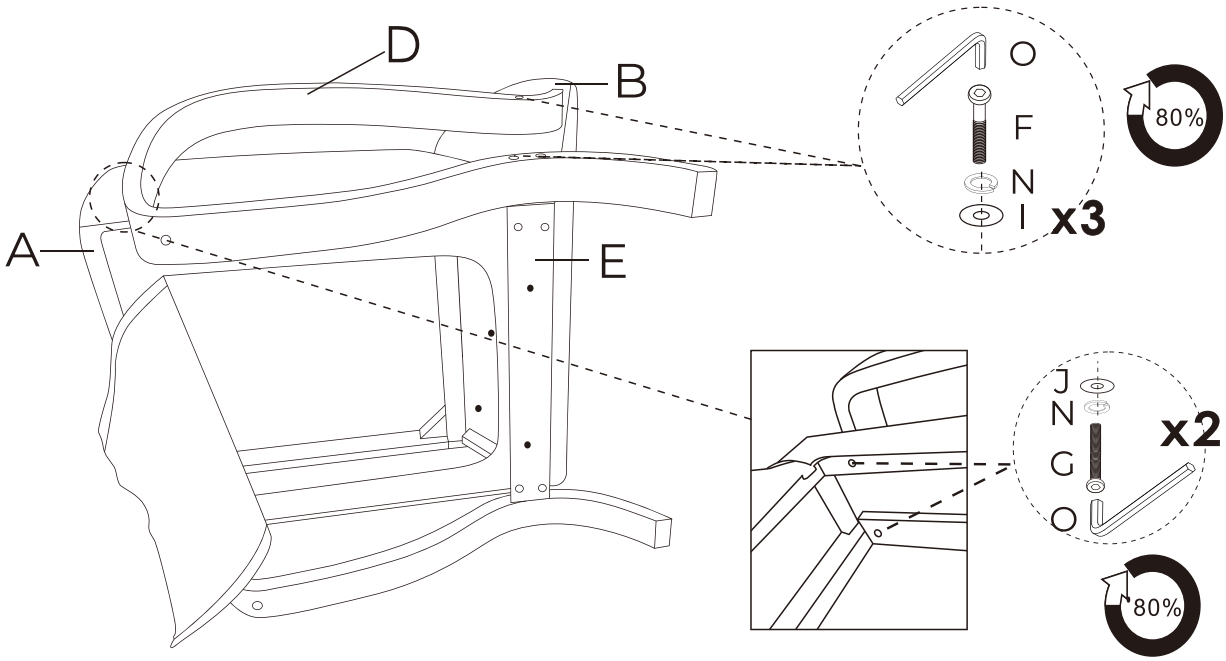

5 Fully tighten all the Bolts (F&G&H) assembled in the previous steps.

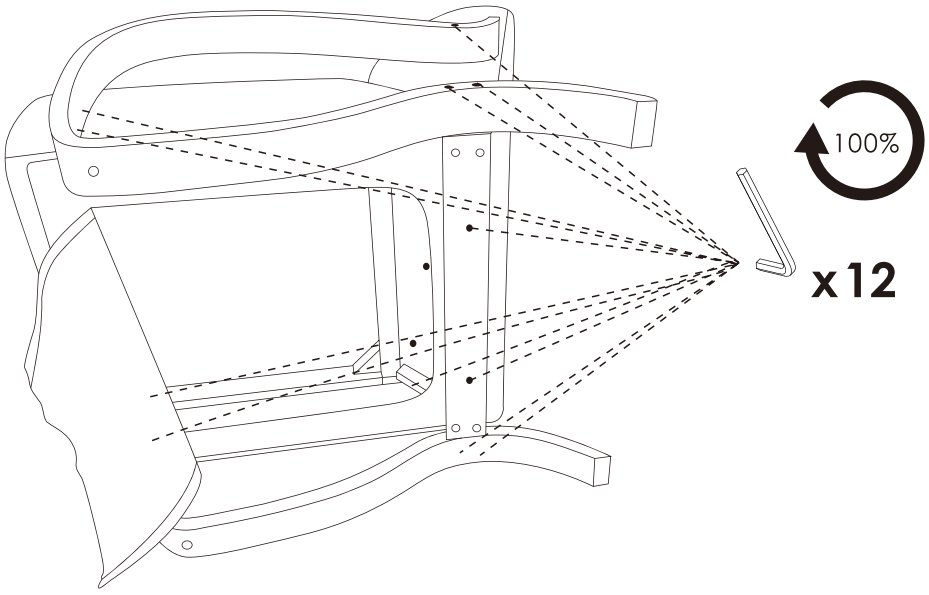

6 Close the zipper at the bottom of Seat Cushion (A). Attach the Foot Levelers (Q) and Felt Floor Protectors (S) to the bottom of Left and Right Armrests (C&D).

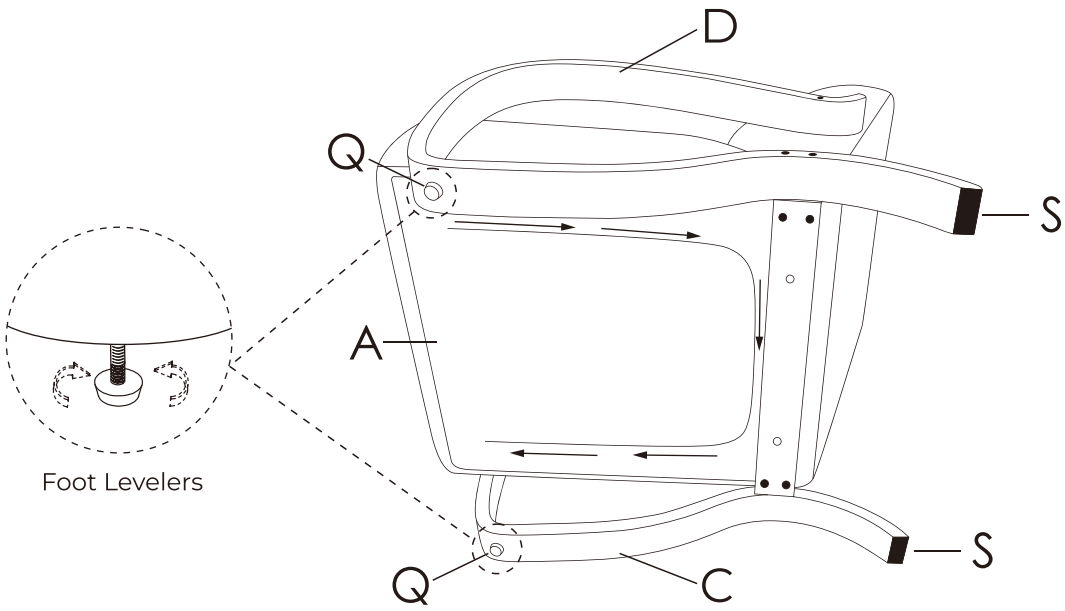

7 Gently tap the Decorative Caps (P) into Left and Right Armrests (C&D).

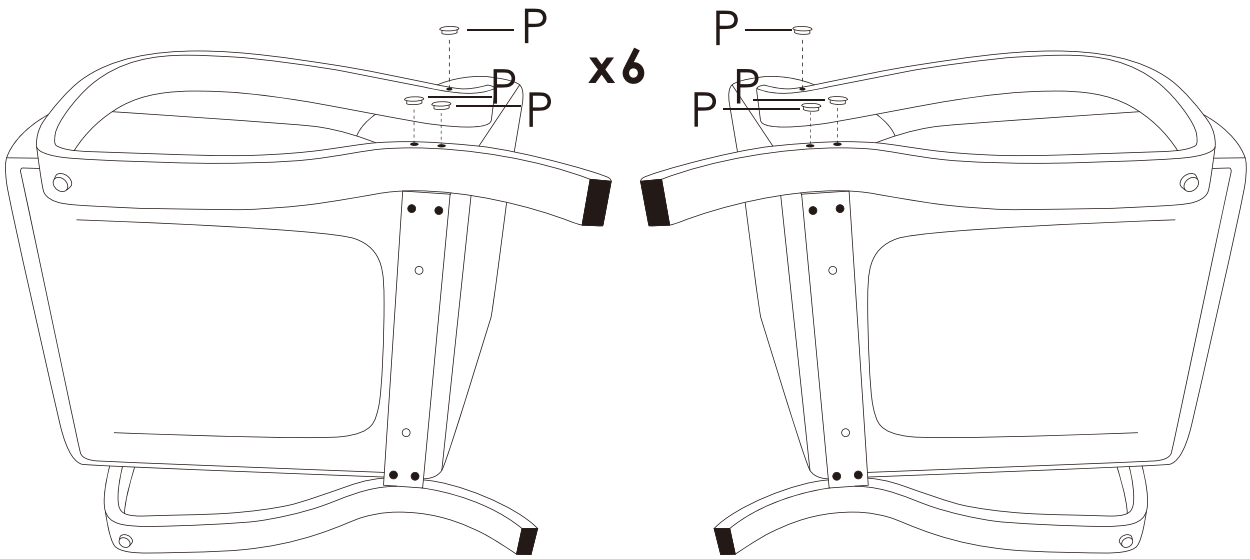

8 Assembly complete, it's ready to use.

