Assembly Instructions

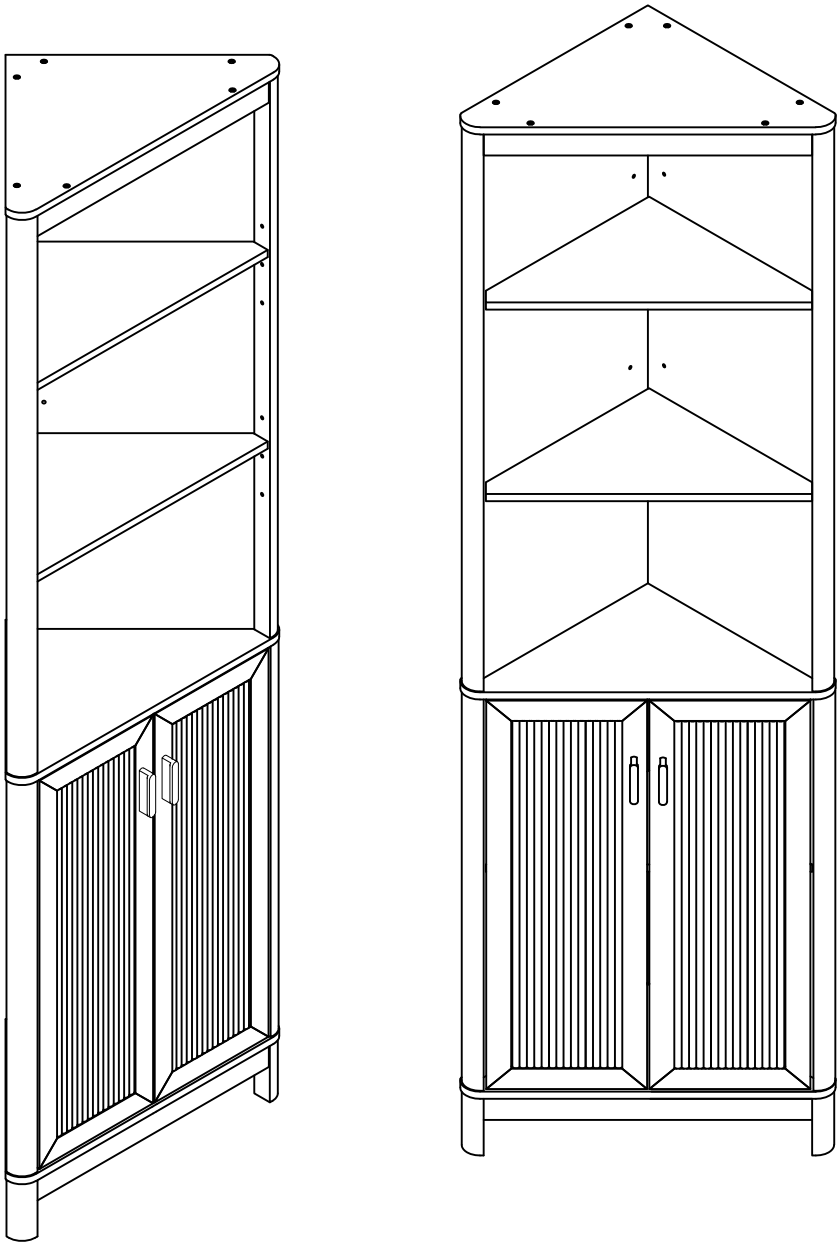

MADE IN CHINA

General Guidelines

- Please read the following instruction carefully and use the product accordingly.
- Please keep this manual and hand it over when you transfer the product.
- This summary mav not include every detail of al vaiaions and considered steps. Please contact us when futher information and help are needed.

Notes

- This item is only intended to be used indoors. Personal iniury and/or damage to product may occurif products are used outside oftheir intended purposes and/orif products have been changed'modified from their original design. The product must be assembled and used in accordance with the provisions ofthe manual. These ler does not assume anv resoonsiblty or liablty with resoect to any damage caused by incorrect assemblv or moroper use.
- It is recommended that assembly is undertaken by at least 2 adults. Please read assembly instructions before assembly and strictly adhere to each step outined.
- If there is/are defective and/or missing part/s after unpacking, please cease assembly immediately and get in contact with us.
- Please assemble the item in a spacious room and do not place the unwraped product directly on the ground to avoid damage. It is recommended to wear gloves during the assembly to avoid scratches from any sharp edges.
- Please do not stand, sit or place heavy items on the wooden boards or other parts before assembly to avoid cracks or distortion of the wooden board. Cracks or distortion will affect the assembly and normal use.
- Please match the corresponding board and fiting based on the part number in the manual.If the board does not match with the fiting, please check the pieces as specified in this manual.
- Please refer to the diagram during assembly. Align all screws with the related pre-drilled holes first and later tighten the screws one by one only after puting all the parts in their correct places.
- Please note that each type of screw has a spare screw.
- Periodically inspect screw tightness while the product is in use. If necessary, retighten to ensure structural integrity.
- Do not expose product to direct sunight or rain; and do not put it in a humid place. Failure to do so may accelerate the distorion,discoloraion or cause fissures.
  Never touch with sharp objects or corrosive chemicals, which may damage the surface of the item.
- For daily care, please clean with a damp cloth, then immediately wipe dry.

Helpful Hints

PEOPLE NEEDED FOR ASSEMBLY: 1-2

- Open your item in the area you plan to keep it to avoid excessive heavy lifting.

- Identify, sort and count the parts before attempting assembly.

- Compression dowels are lightly tapped in with a hammer.

- Slides are labeled with an R (right) and L (left) for proper placement.

- Make sure to always face the point on the top of the Cam Lock towards the outer edge.

- If there is a back panel in the package, please install it to make sure your unit is complete and sturdy.

-Please fix all the screws provided for the back panel which can enhance product stability. If it is difficult to fix it when tightening, it can be fixed with the help of a hammer and then tightened.

- Do NOT use harsh chemicals or abrasive cleaners on this item.

- Never push, pull, or drag your furniture.

EXPLODED

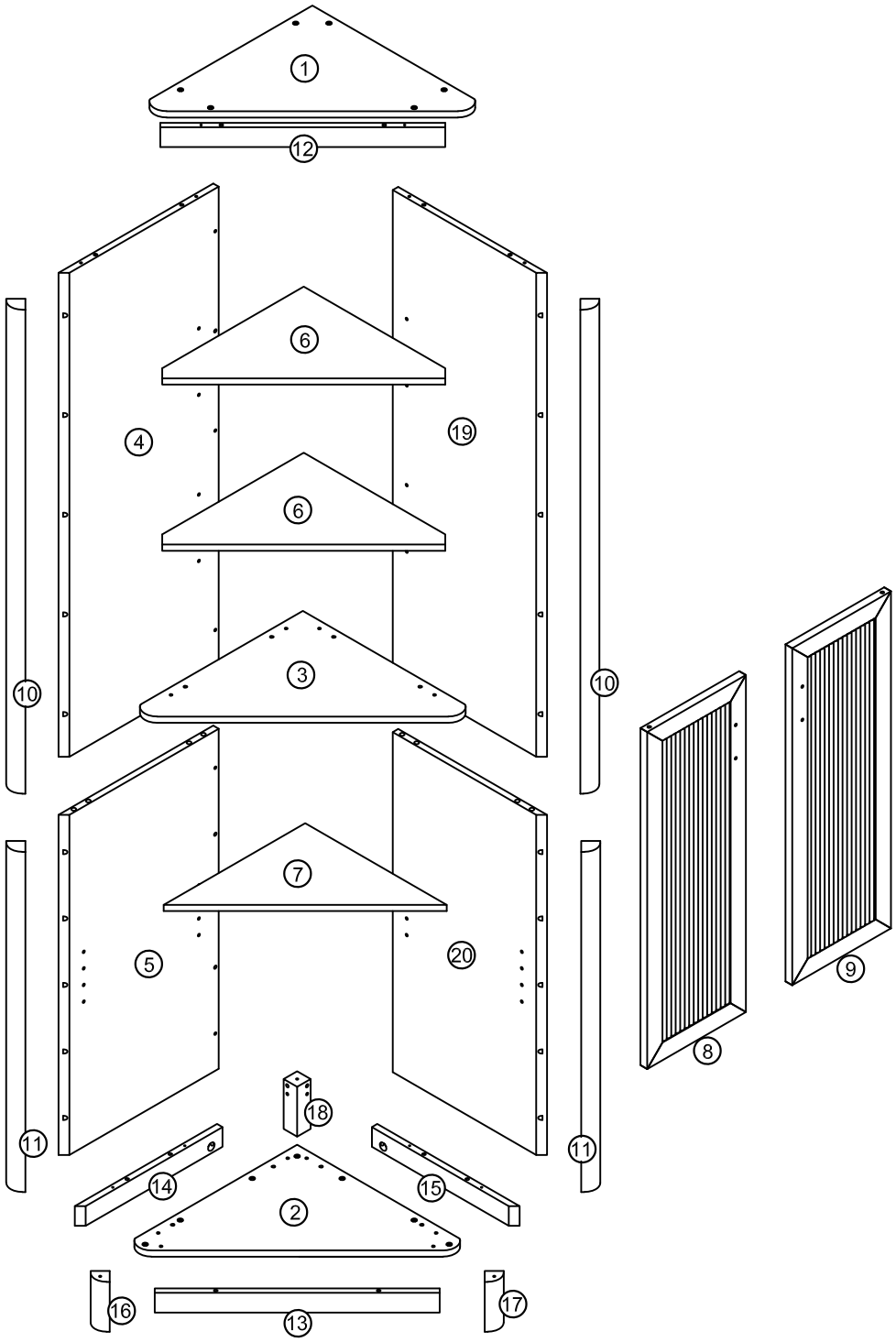

EXPLODED

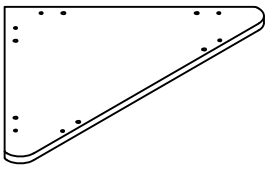

①x1PC

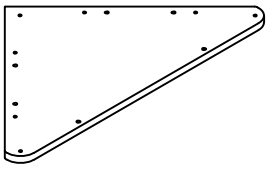

②x1PC

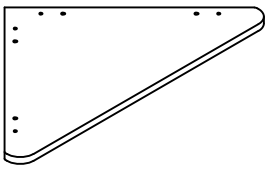

③x1PC

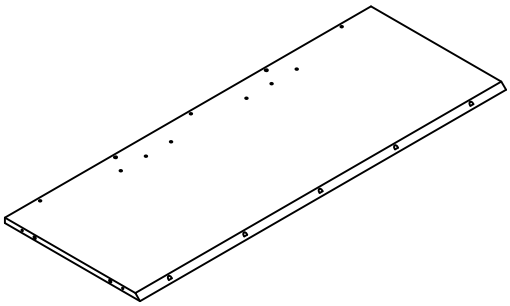

④x1PC

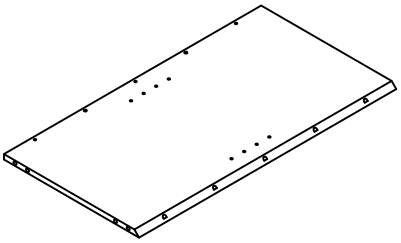

⑤x1PC

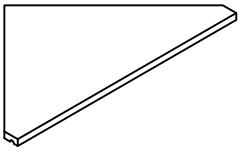

⑥x2PCS

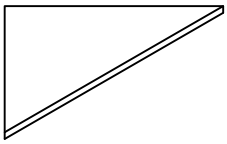

⑦x1PC

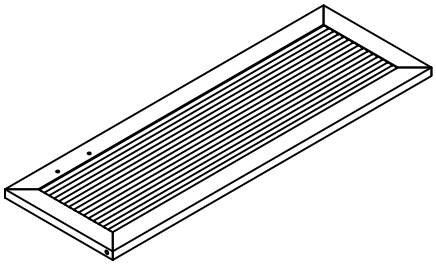

⑧x1PC

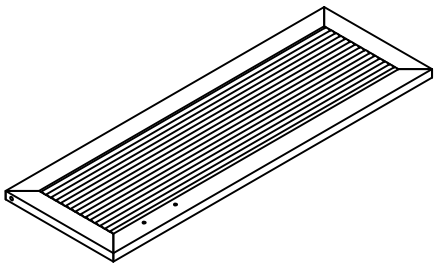

⑨x1PC

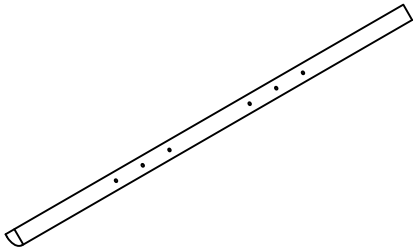

⑩ x2PCS

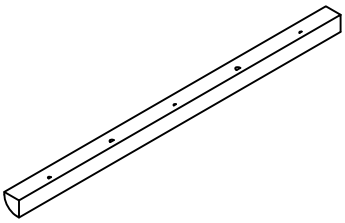

⑪ x2PCS

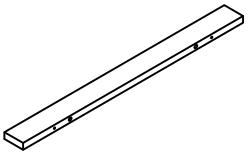

⑫ x1PC

EXPLODED

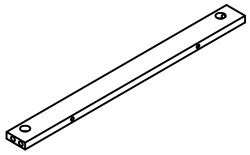

⑬ x1PC

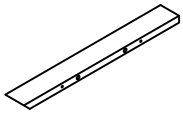

⑭ x1PC

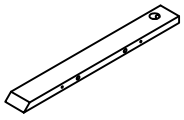

⑮ x1PC

⑯ x1PC

⑰ x1PC

⑱ x1PC

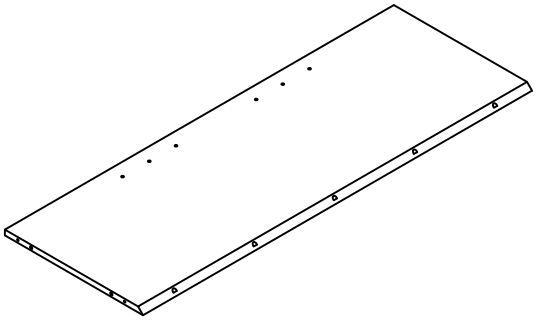

⑲ x1PC

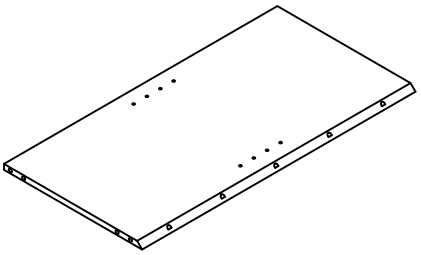

⑳ x1PC

HOJA PARTE

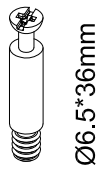

A×24+2PCS

B×24+2PCS

C×40+3PCS

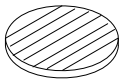

D×24+2PCS

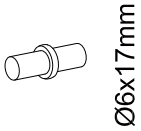

E×2PCS

F×17+1PCS

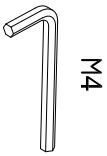

G×1PC

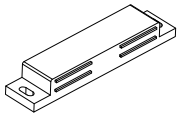

H×1PC

I×2PCS

J×12+1PCS

K×2PCS

L×6PCS

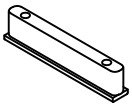

M×2PCS

N×4PCS

O×2PCS

P×2PCS

Qx2PCS

Rx2PCS

Sx2PCS

T×2PCS

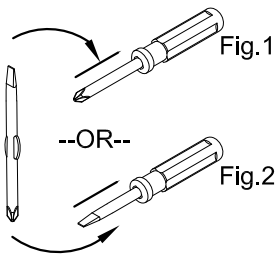

STEP1

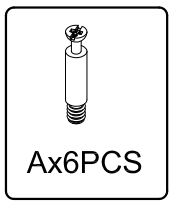

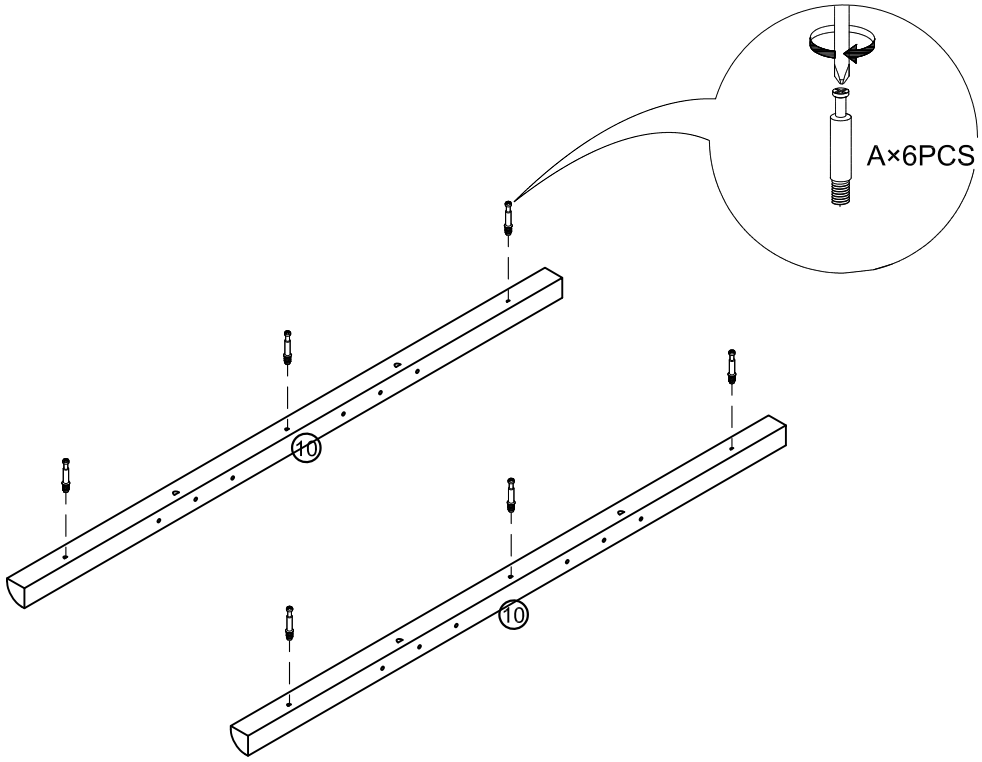

STEP2

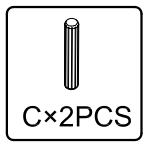

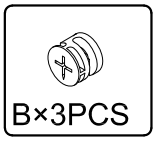

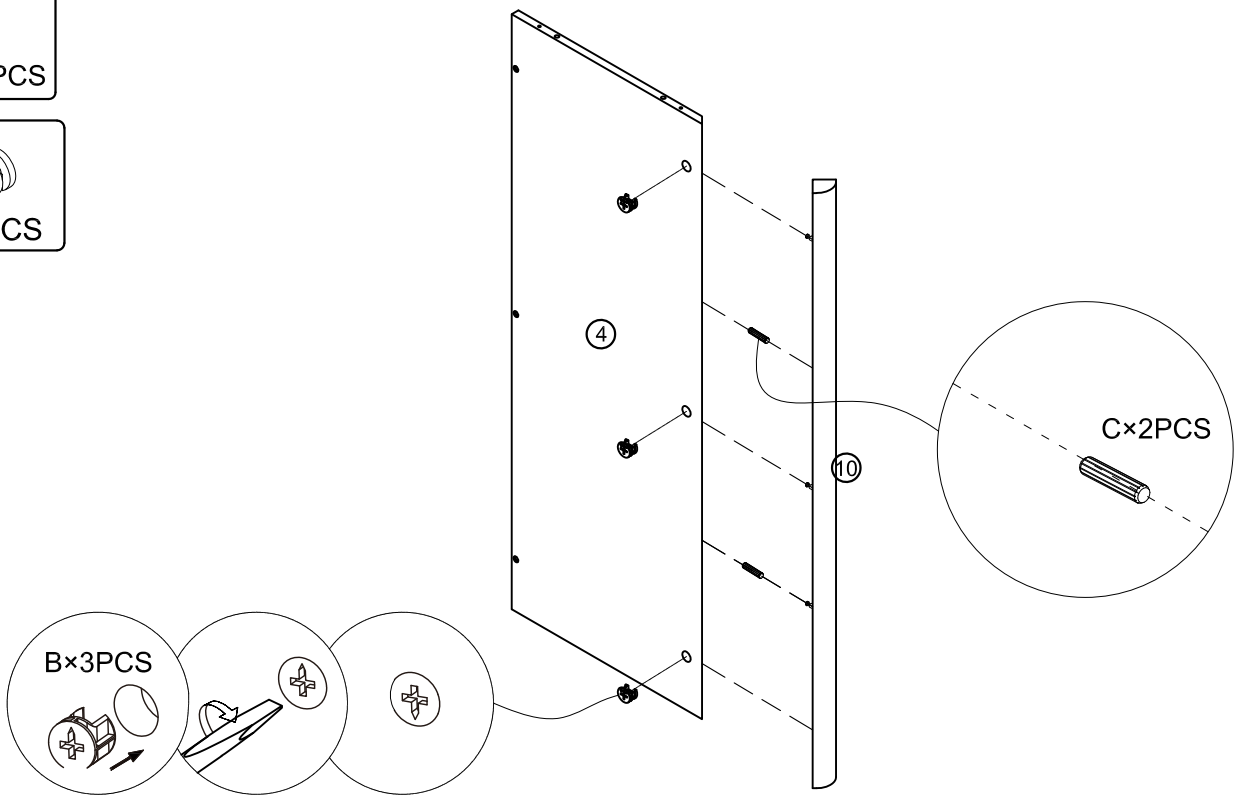

STEP3

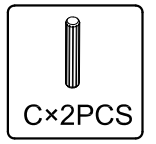

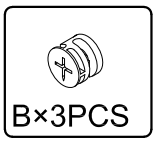

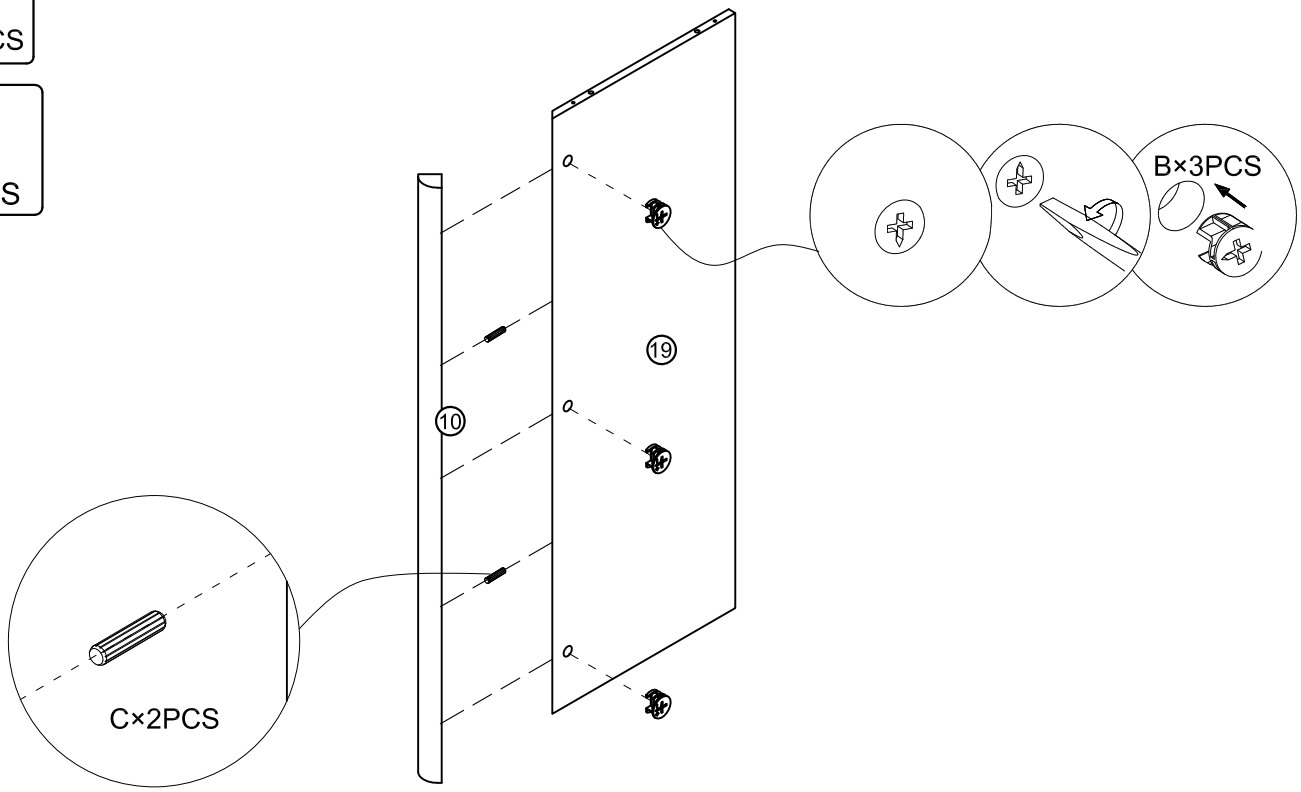

STEP4

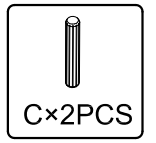

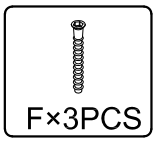

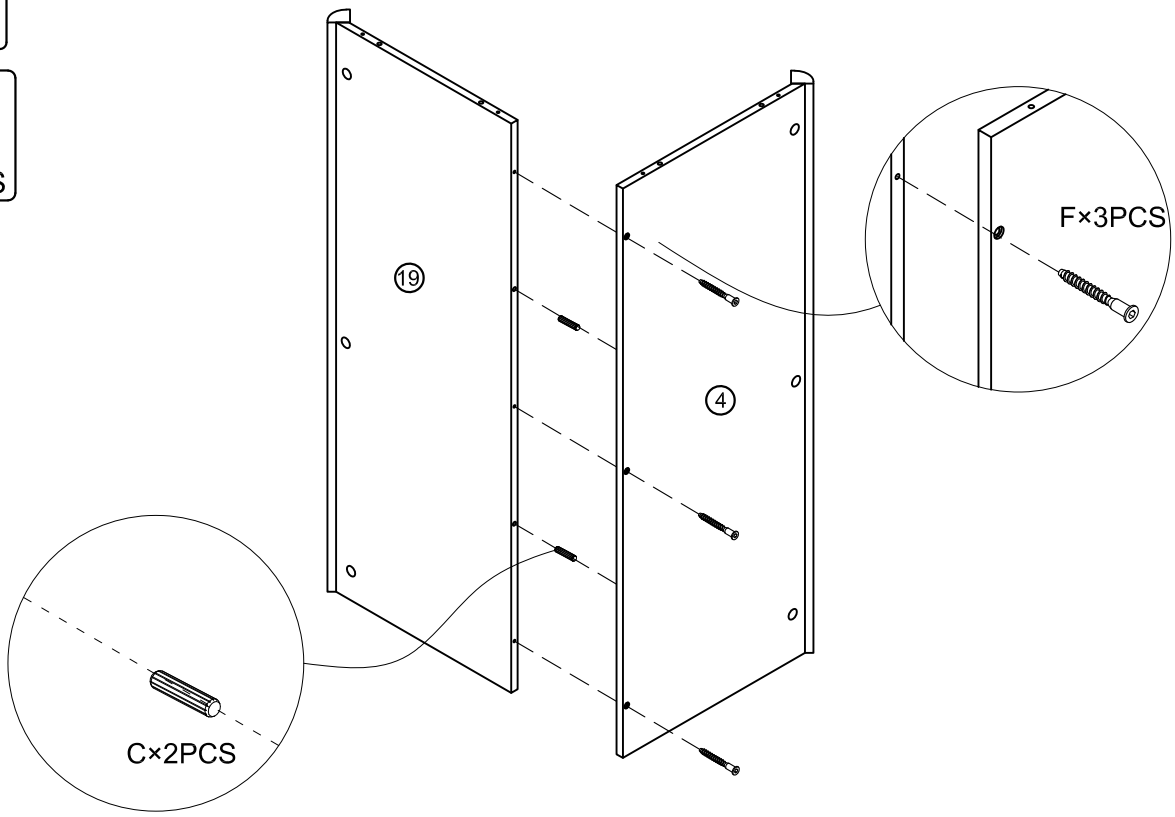

STEP5

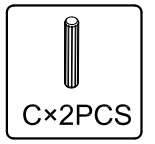

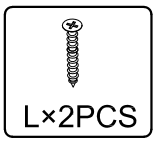

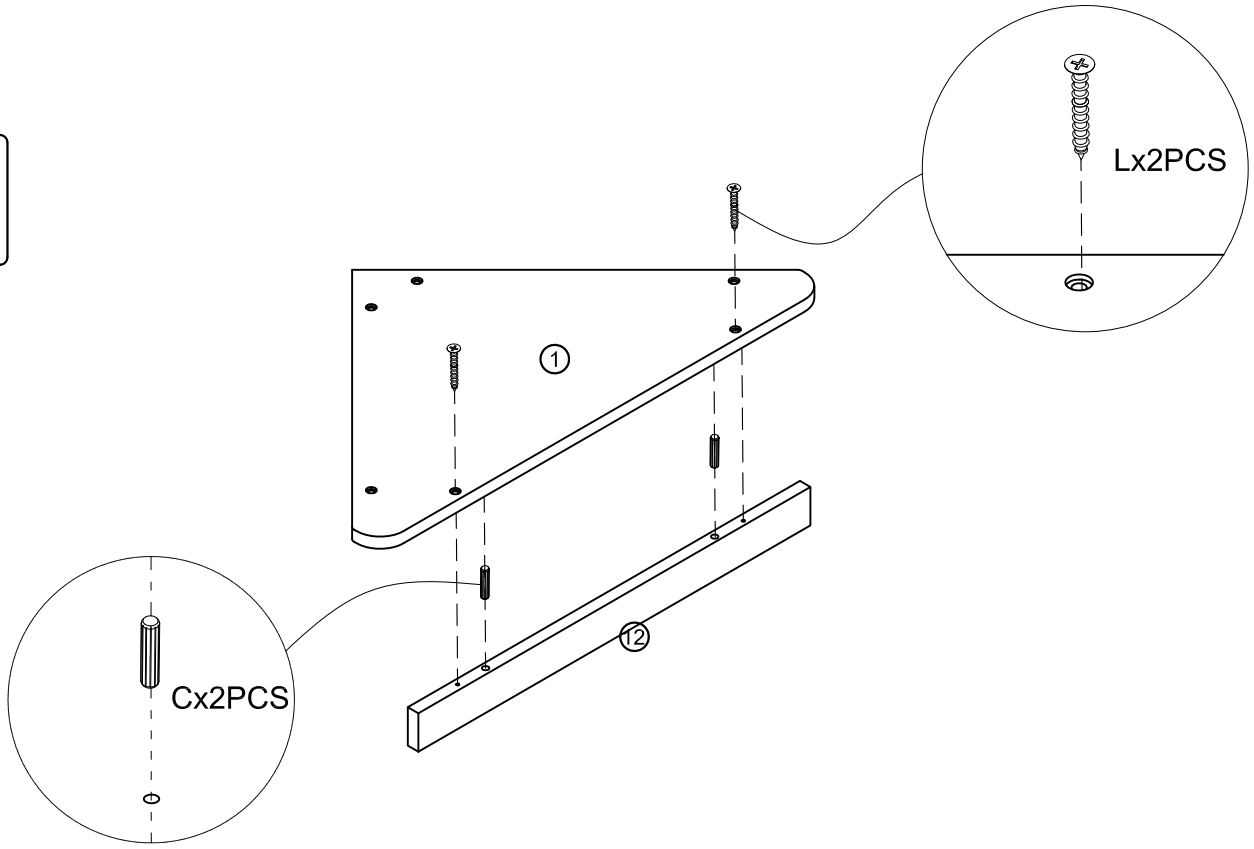

STEP6

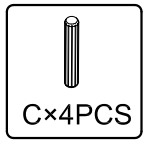

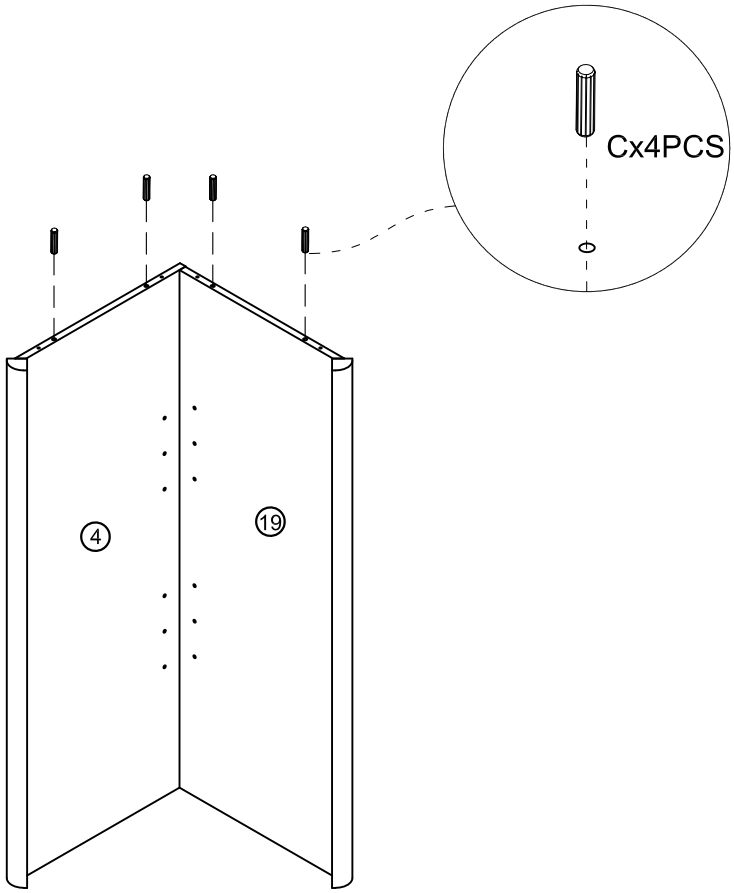

STEP7

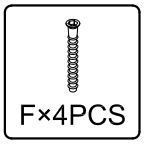

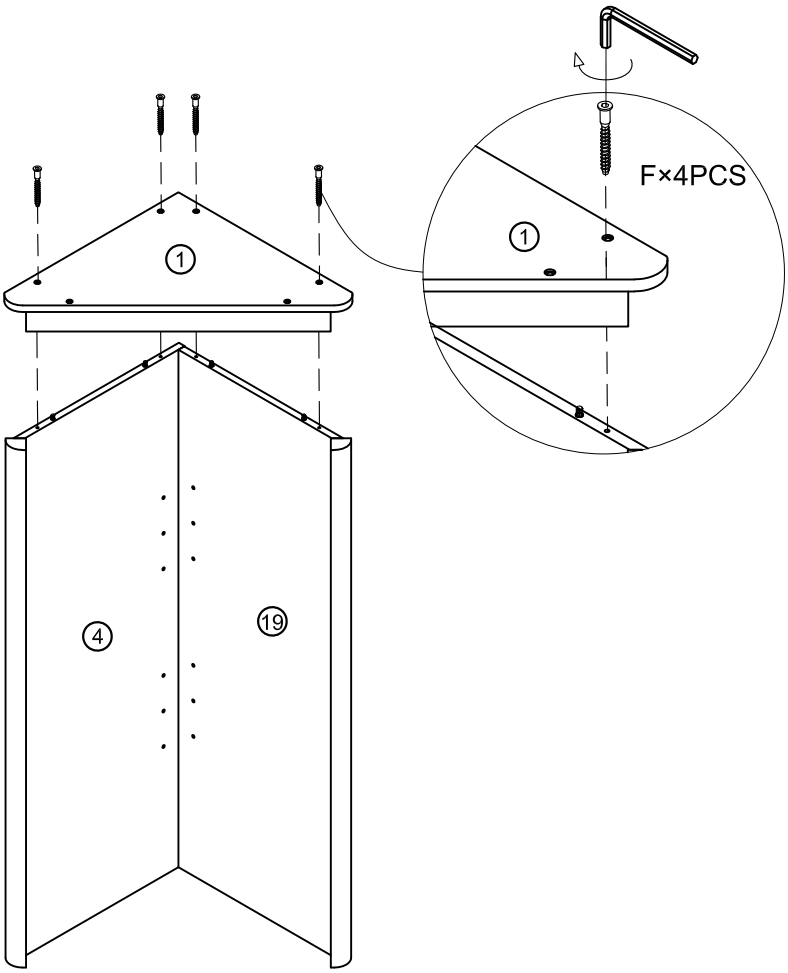

STEP8

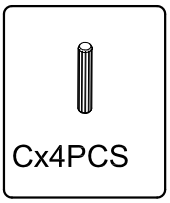

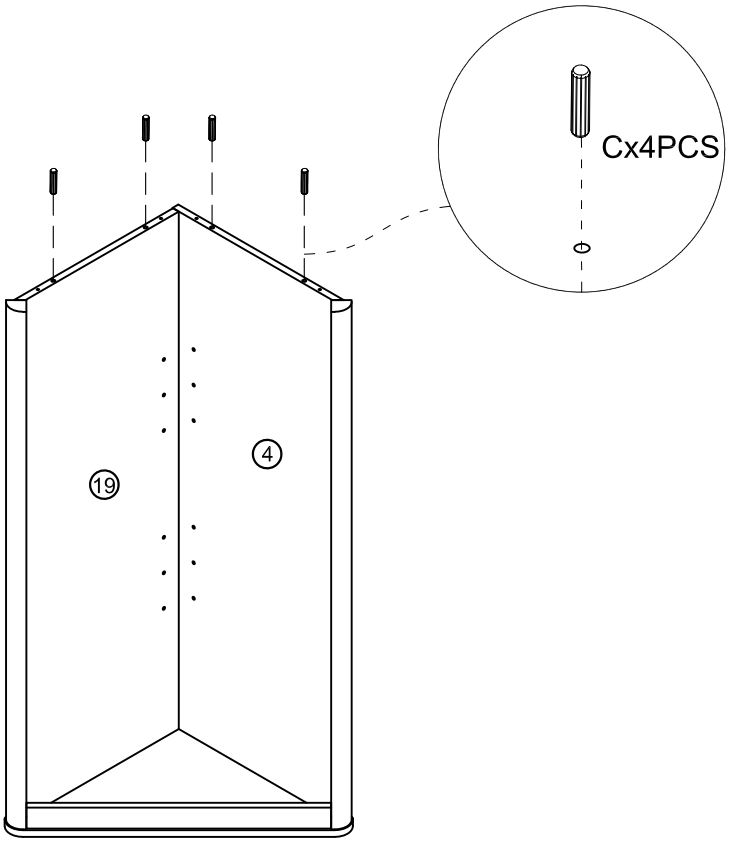

STEP9

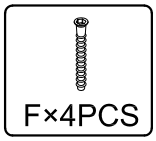

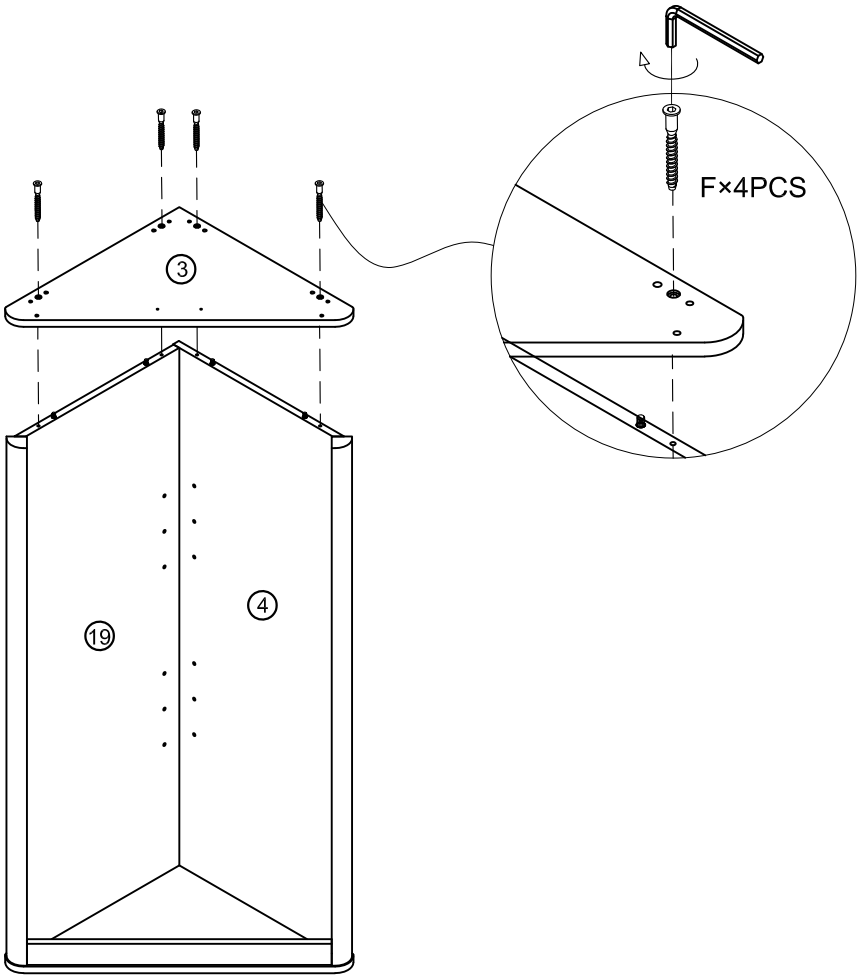

STEP10

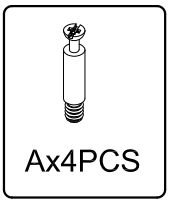

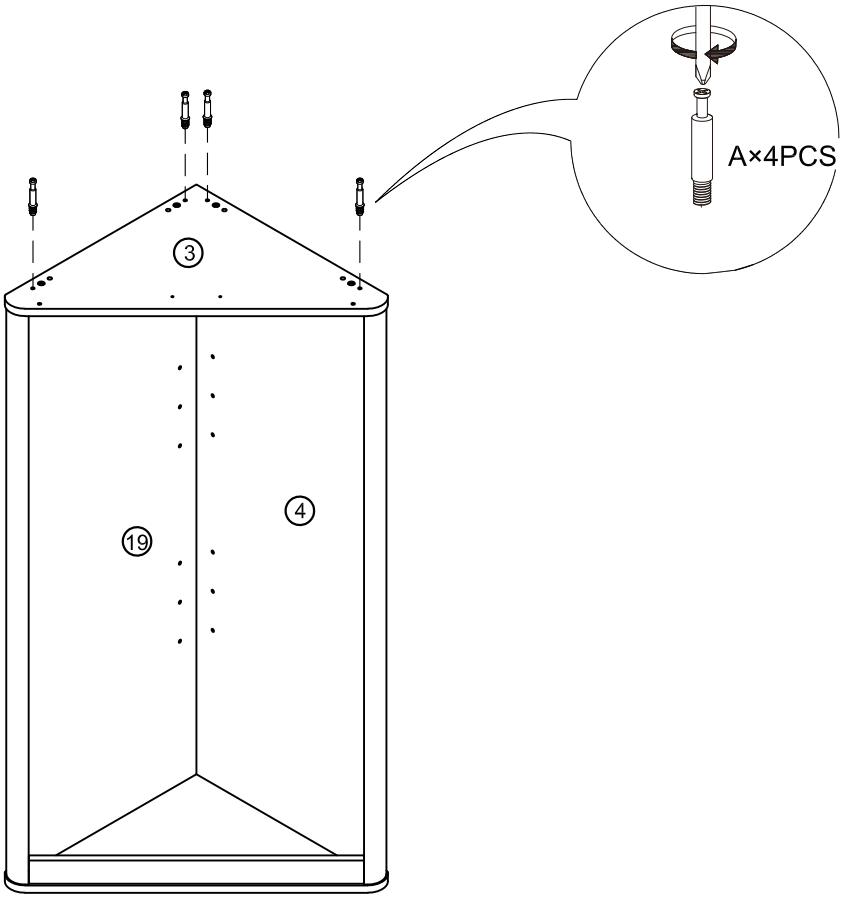

STEP11

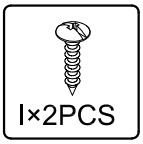

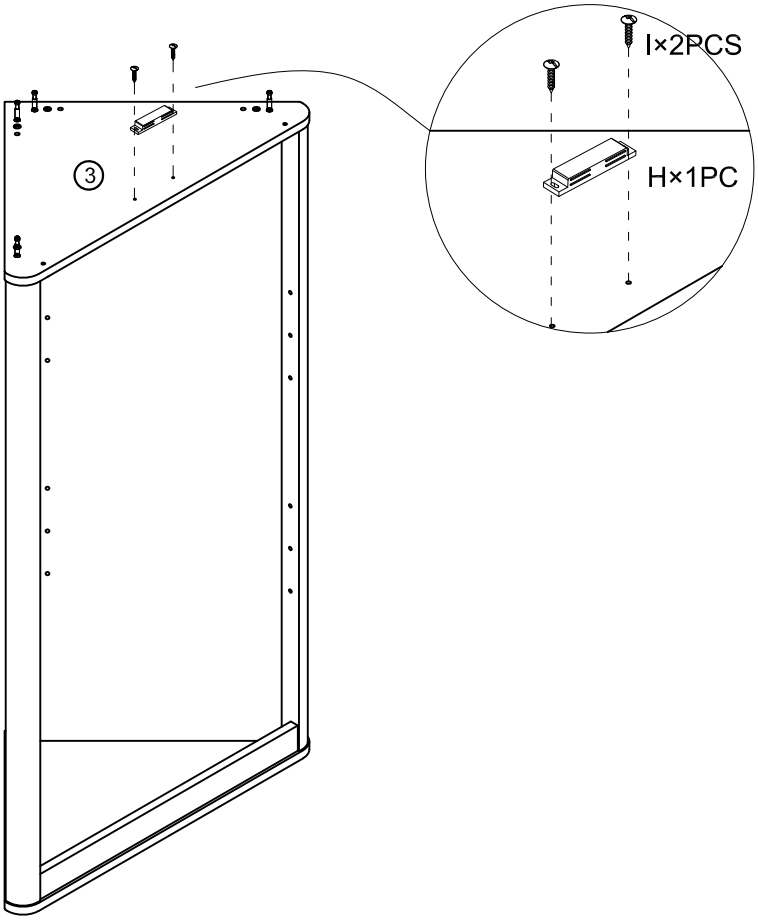

STEP12

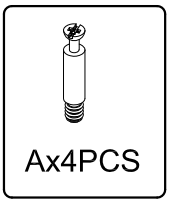

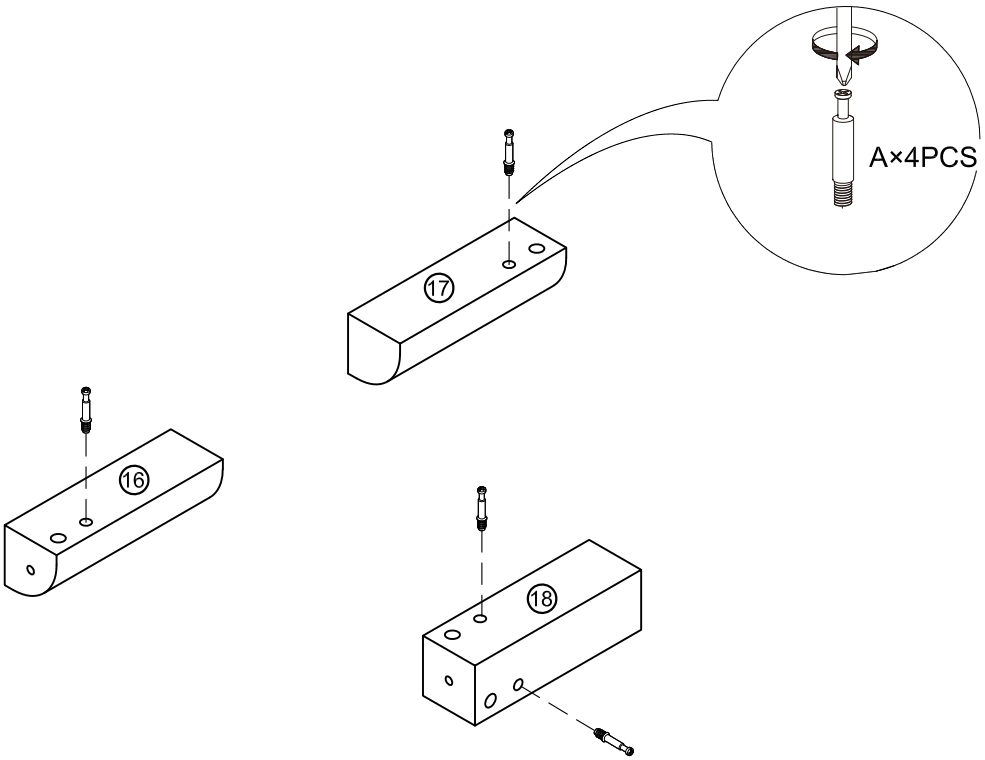

STEP13

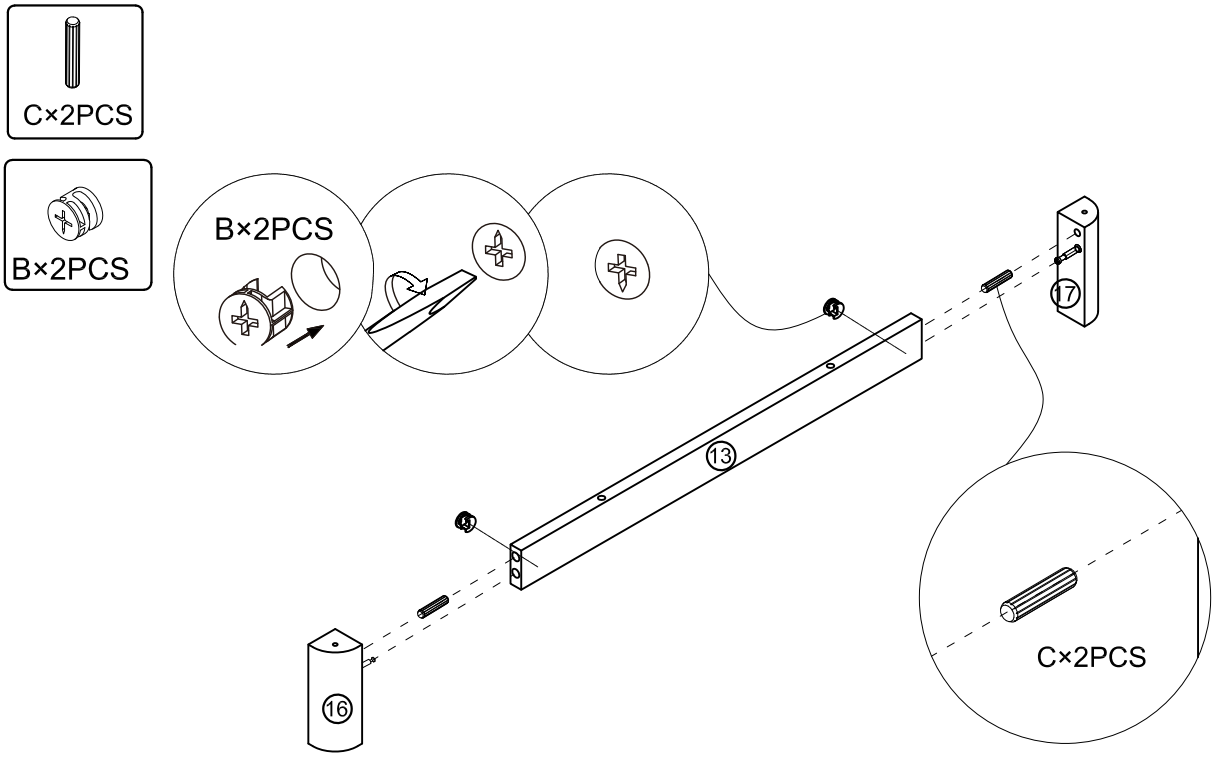

STEP14

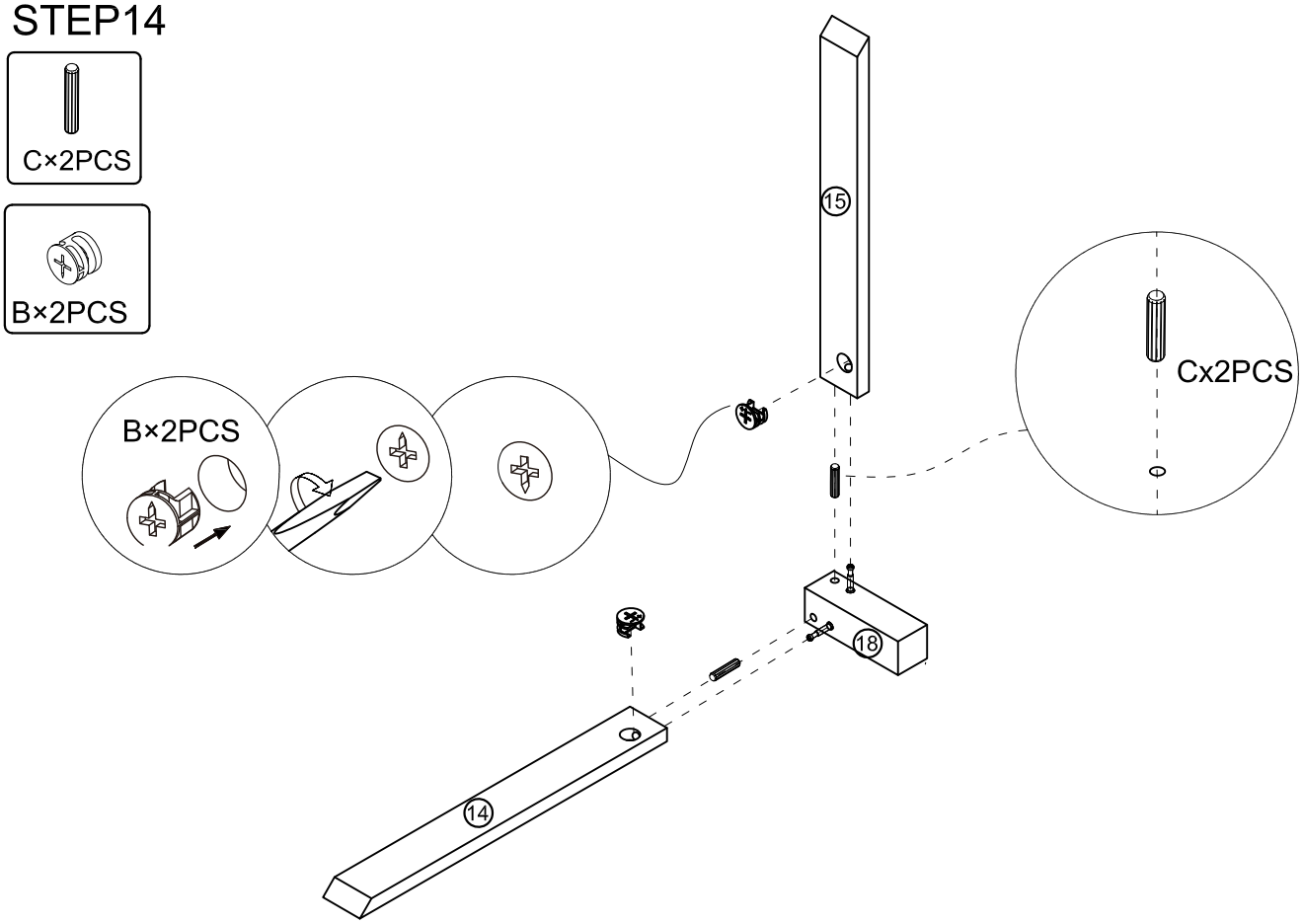

STEP15

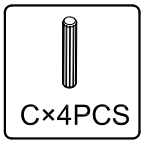

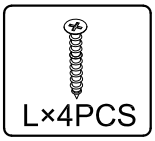

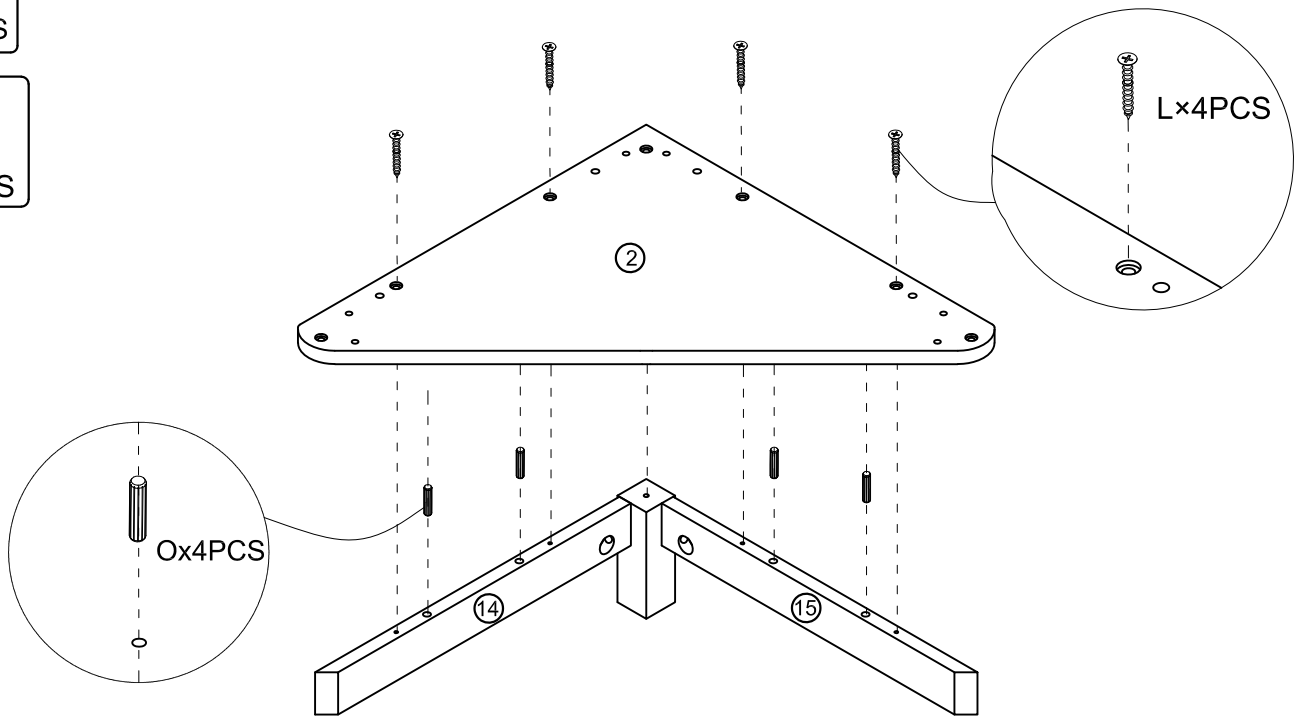

STEP16

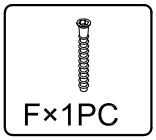

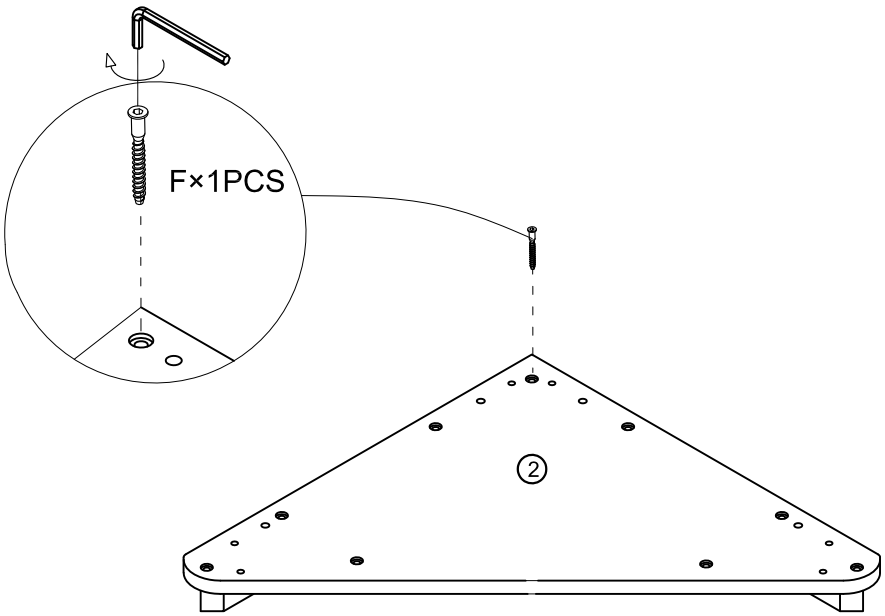

STEP17

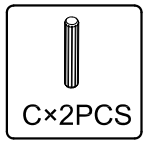

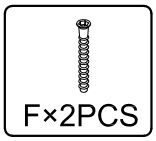

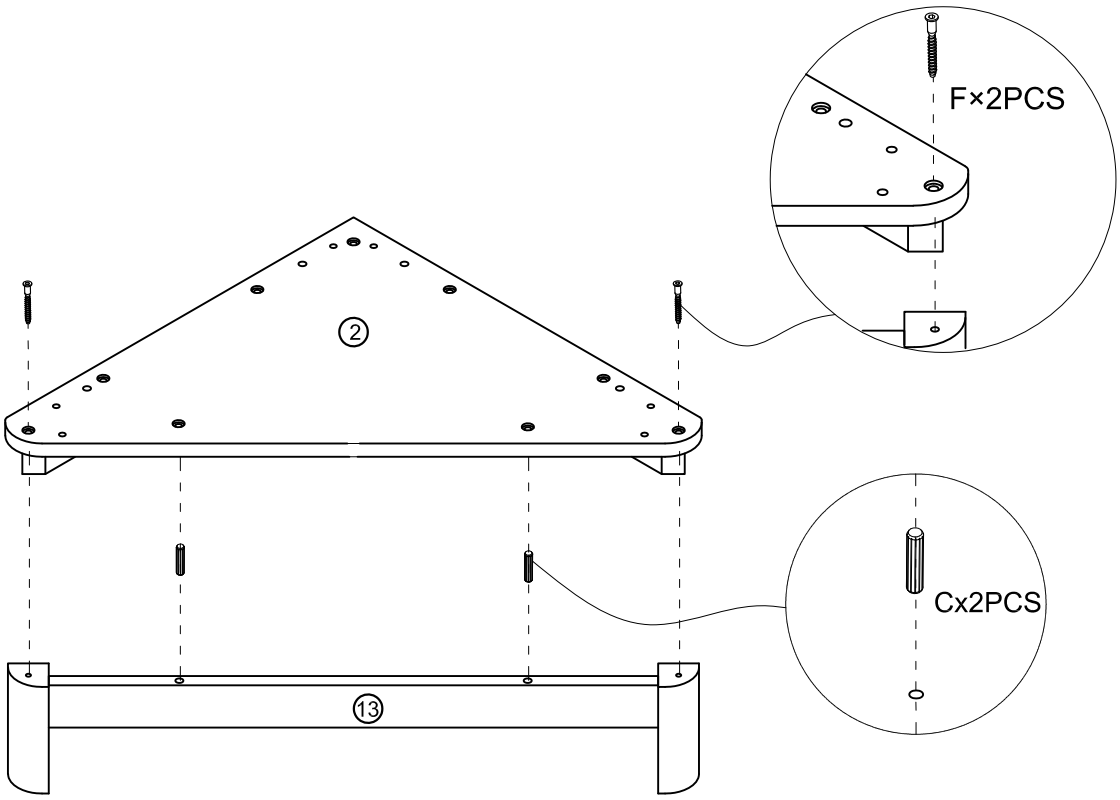

STEP18

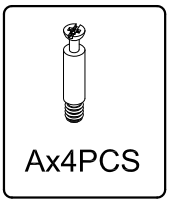

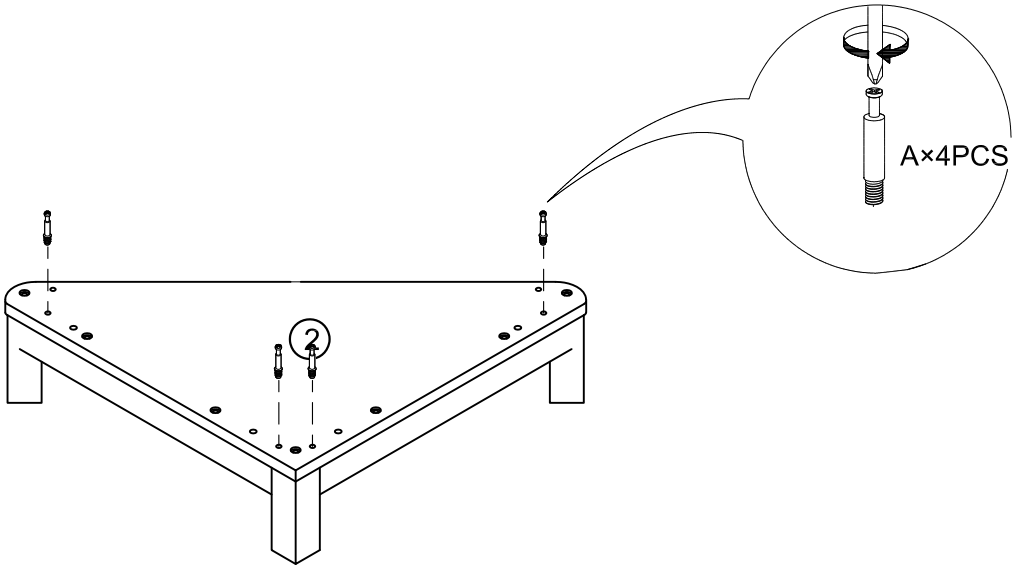

STEP19

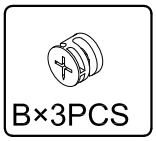

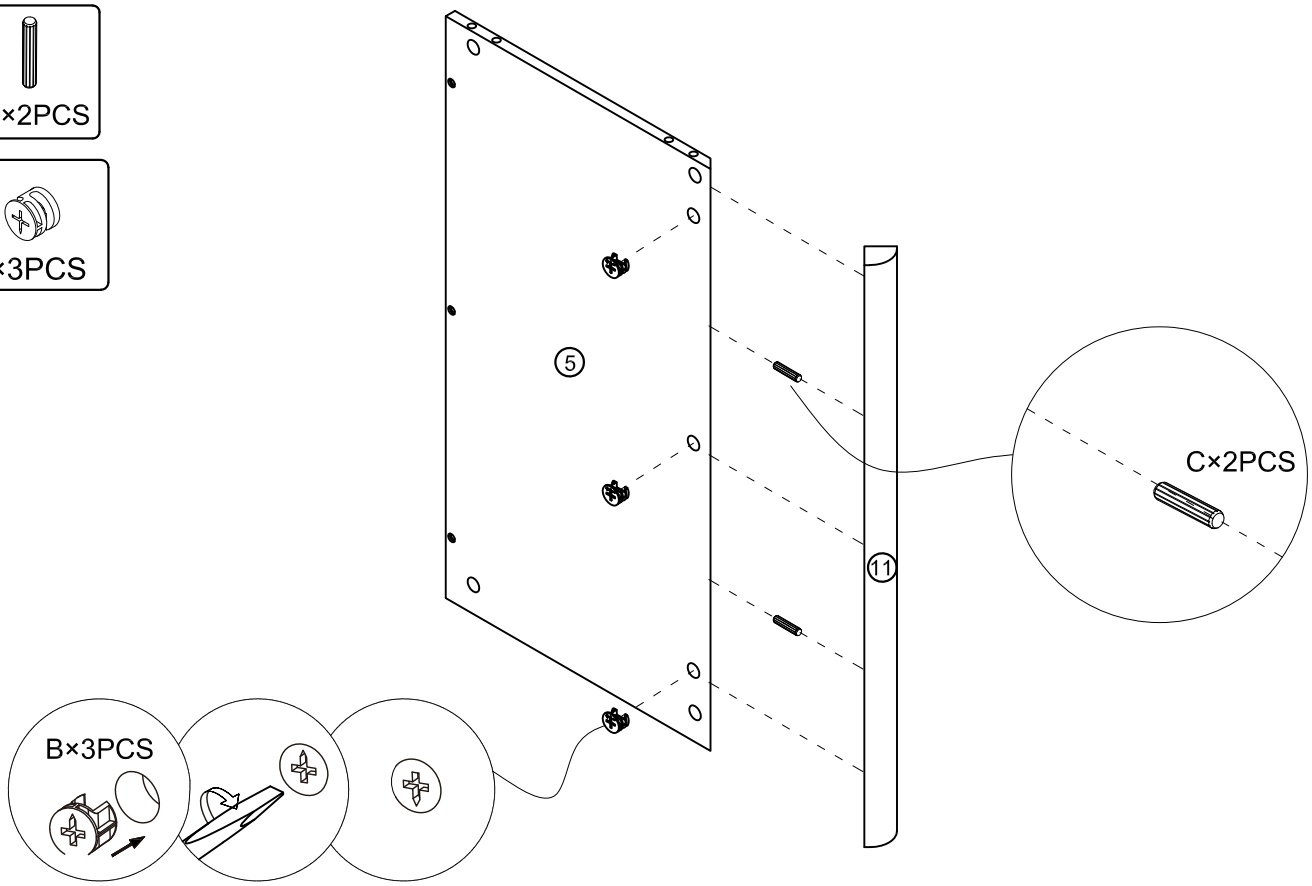

STEP20

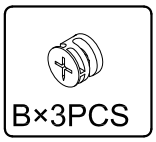

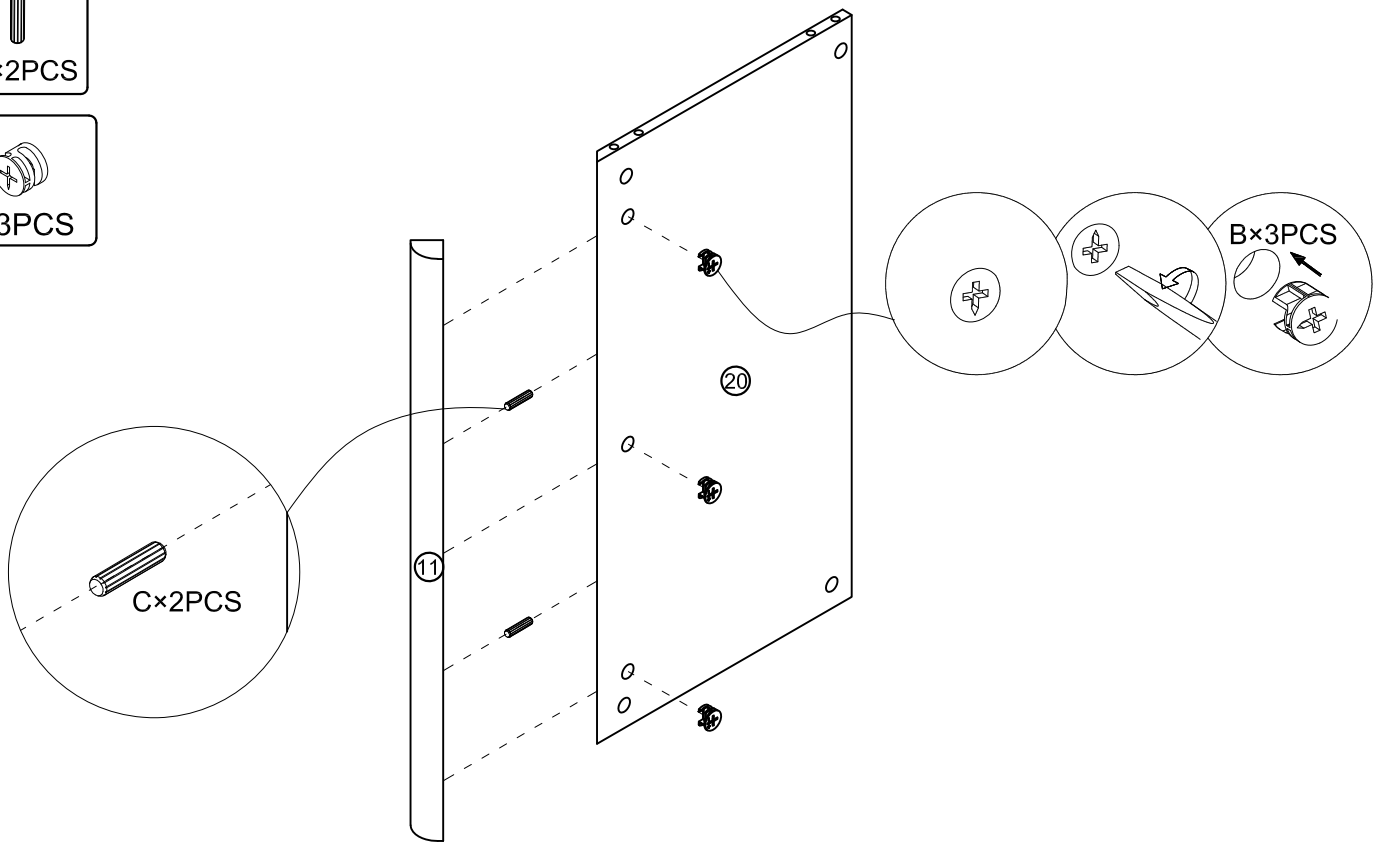

STEP21

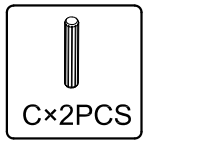

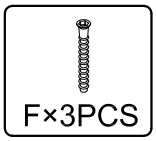

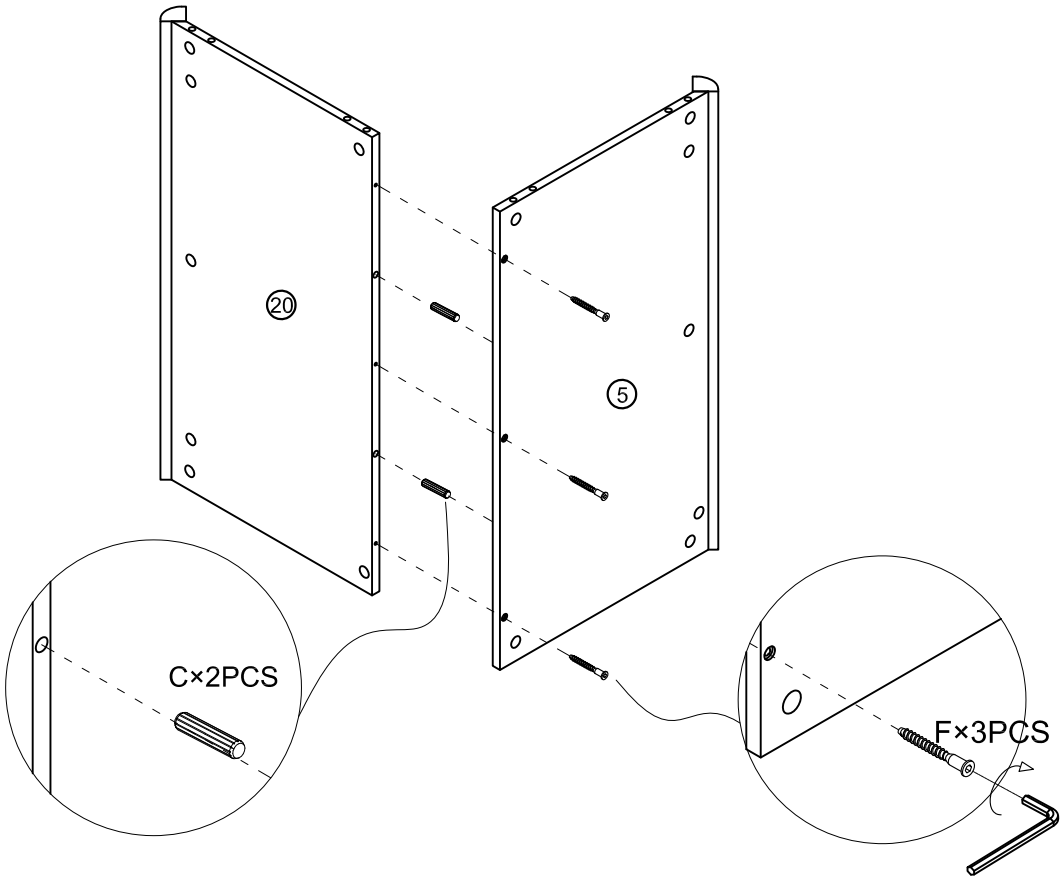

STEP22

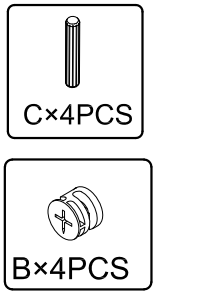

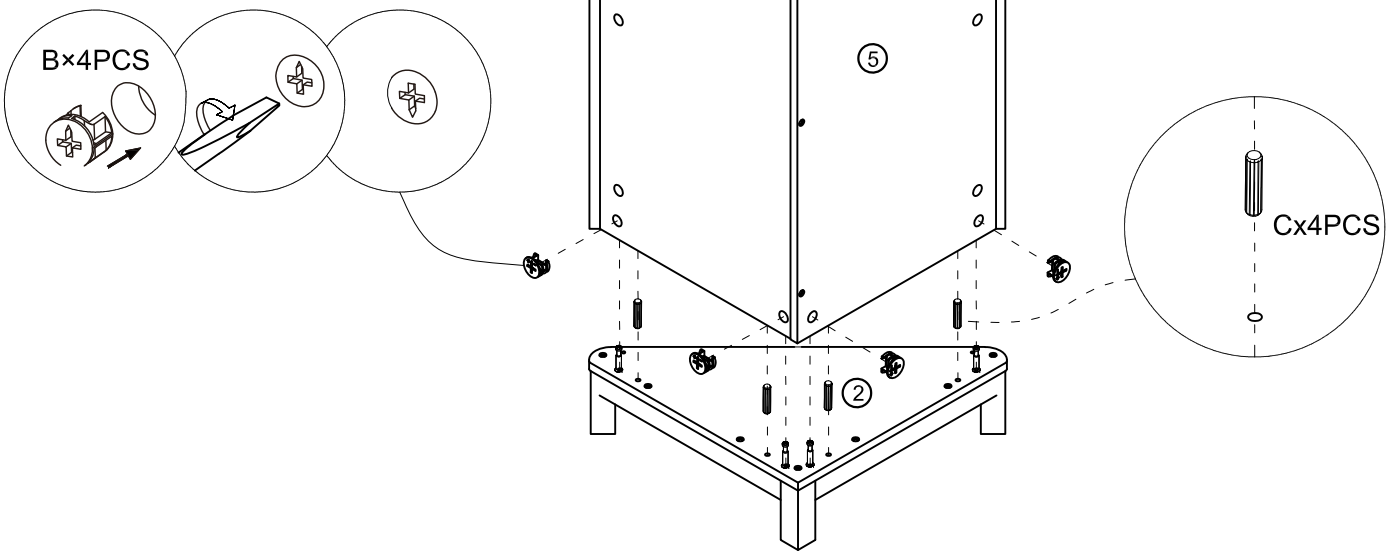

STEP23

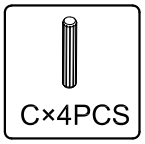

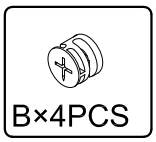

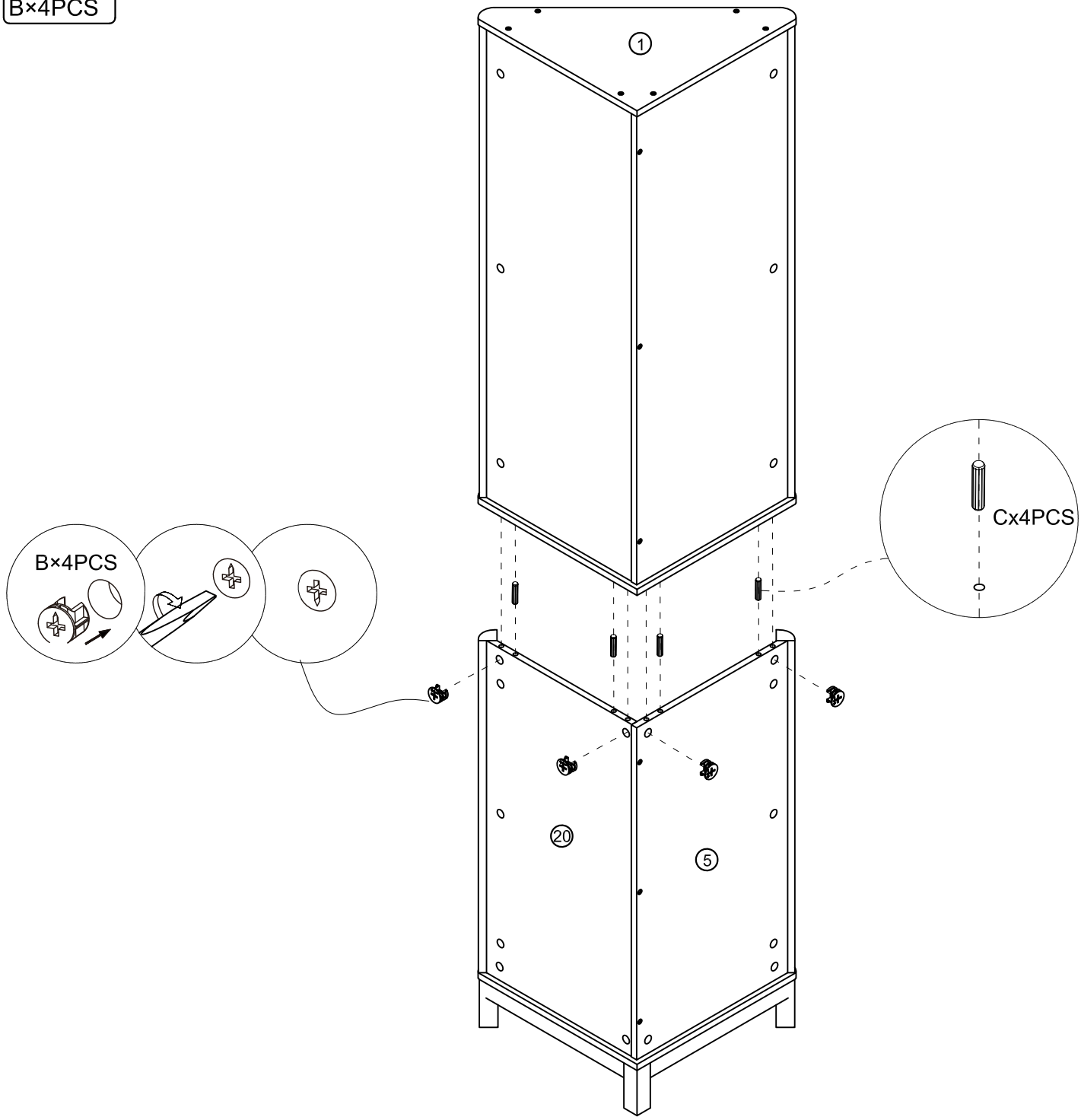

STEP24

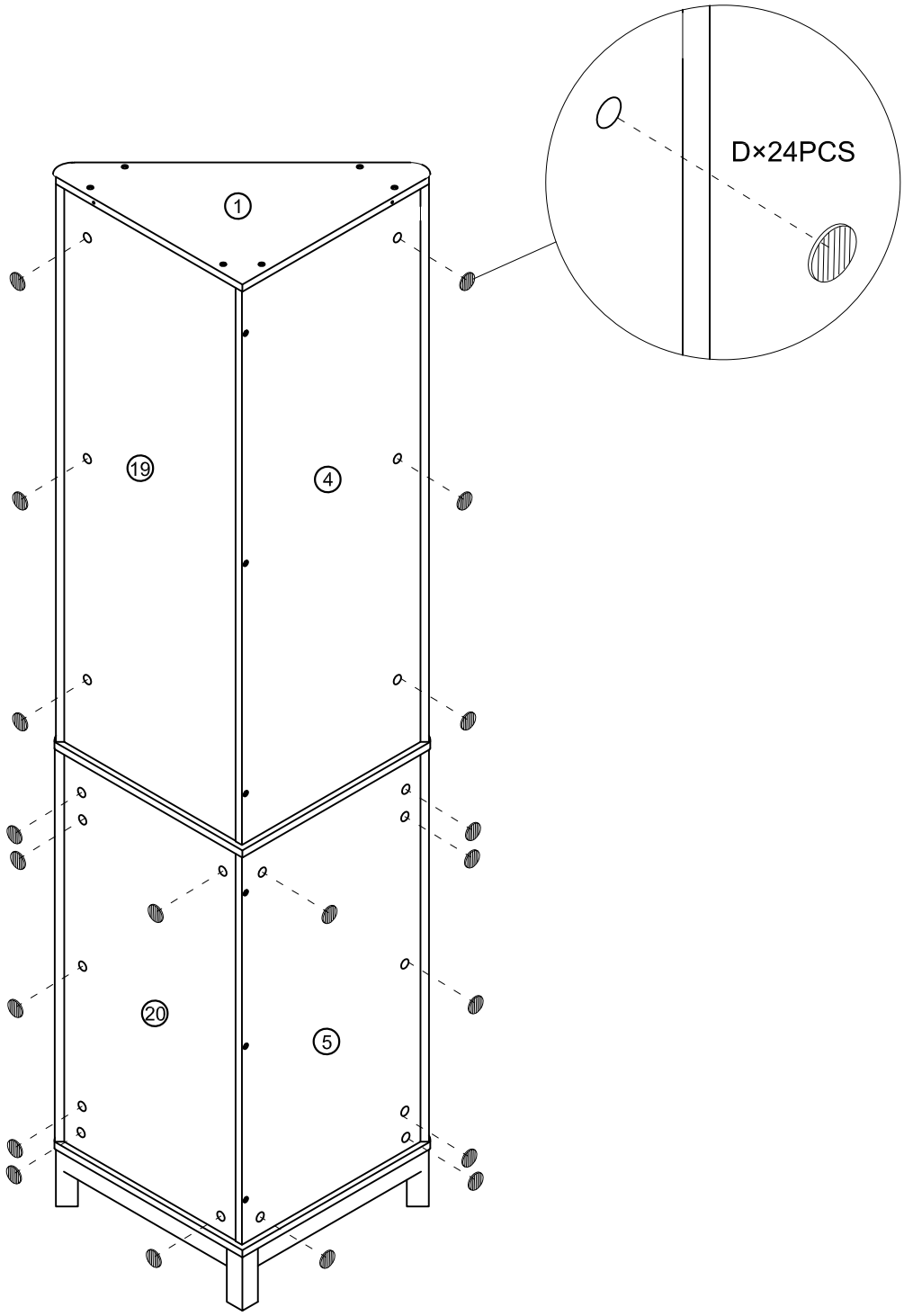

STEP25

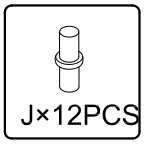

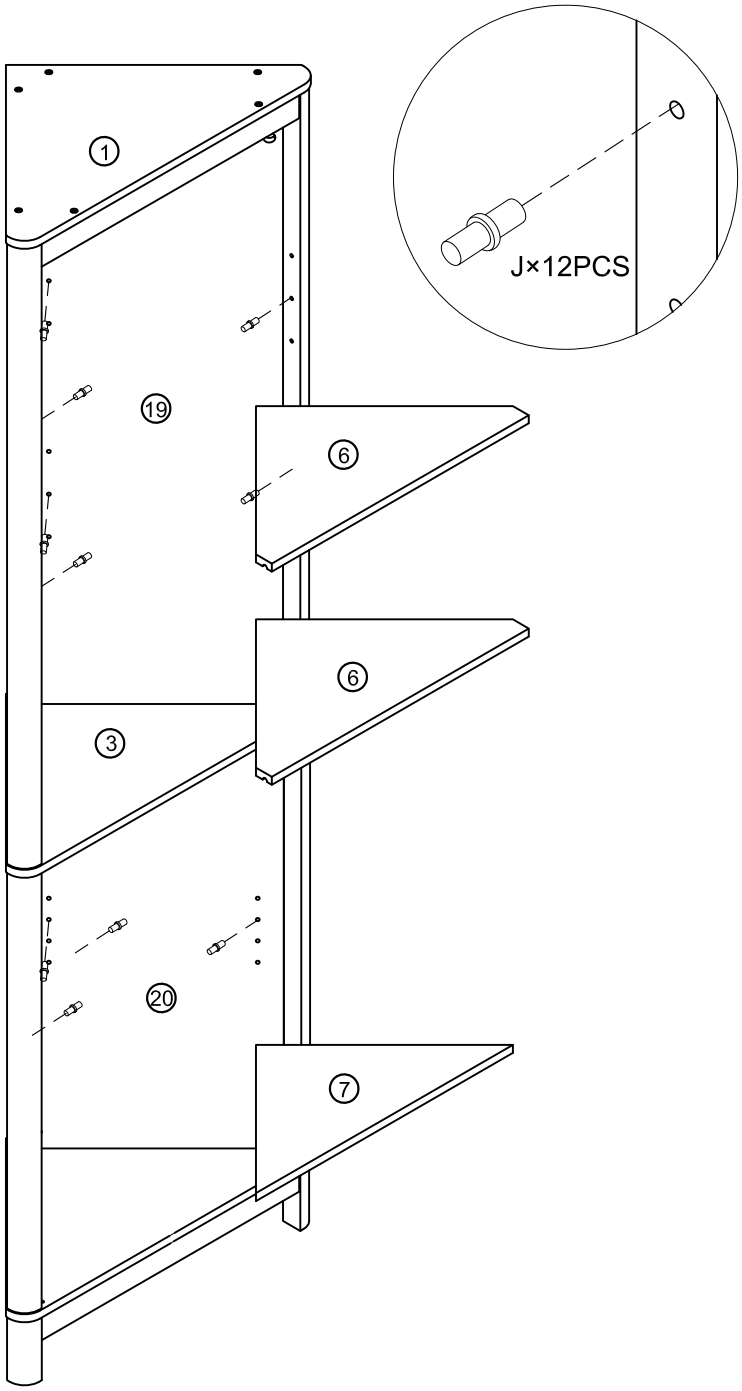

STEP26

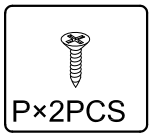

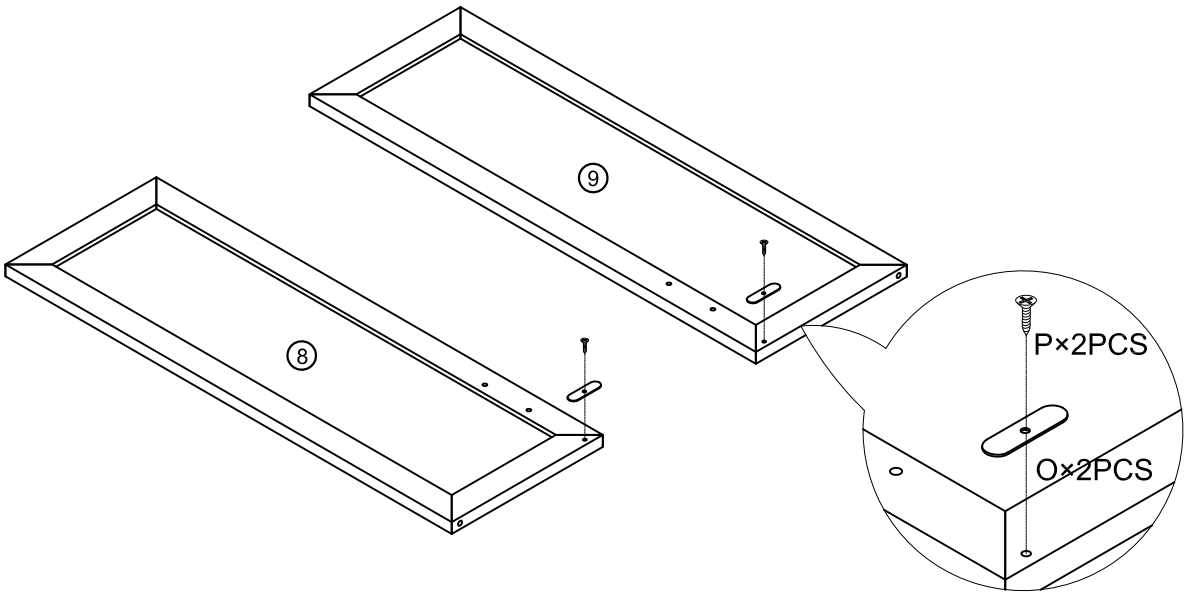

STEP27

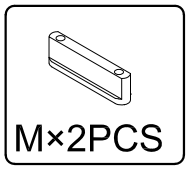

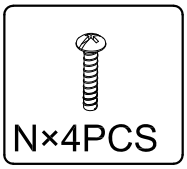

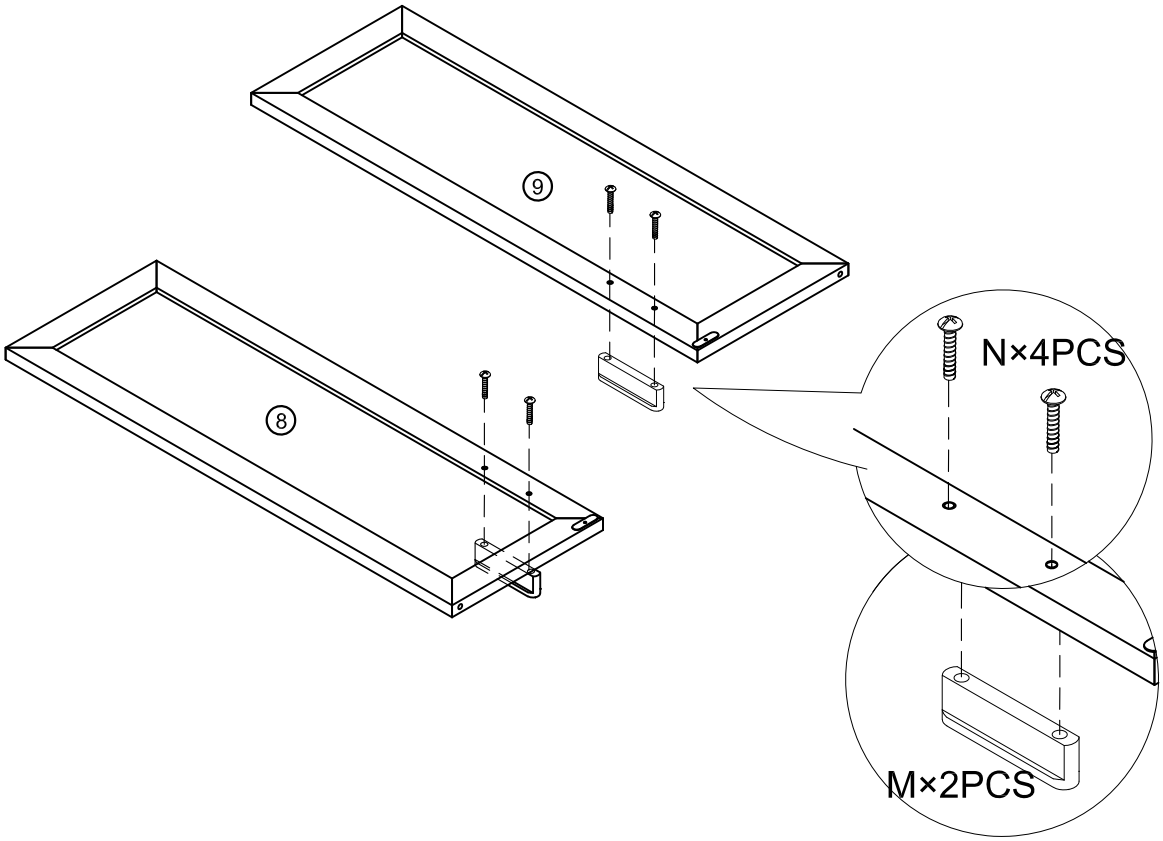

STEP28

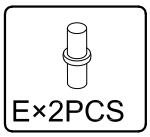

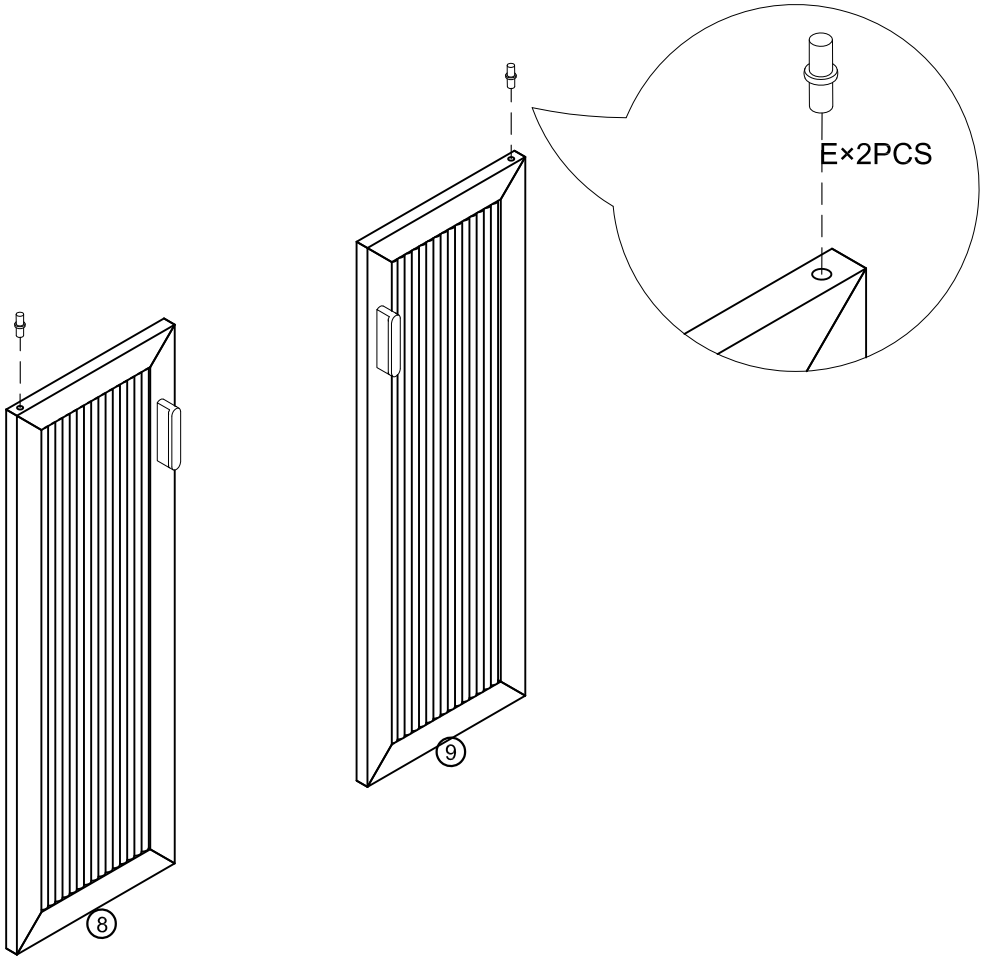

STEP29

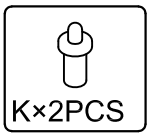

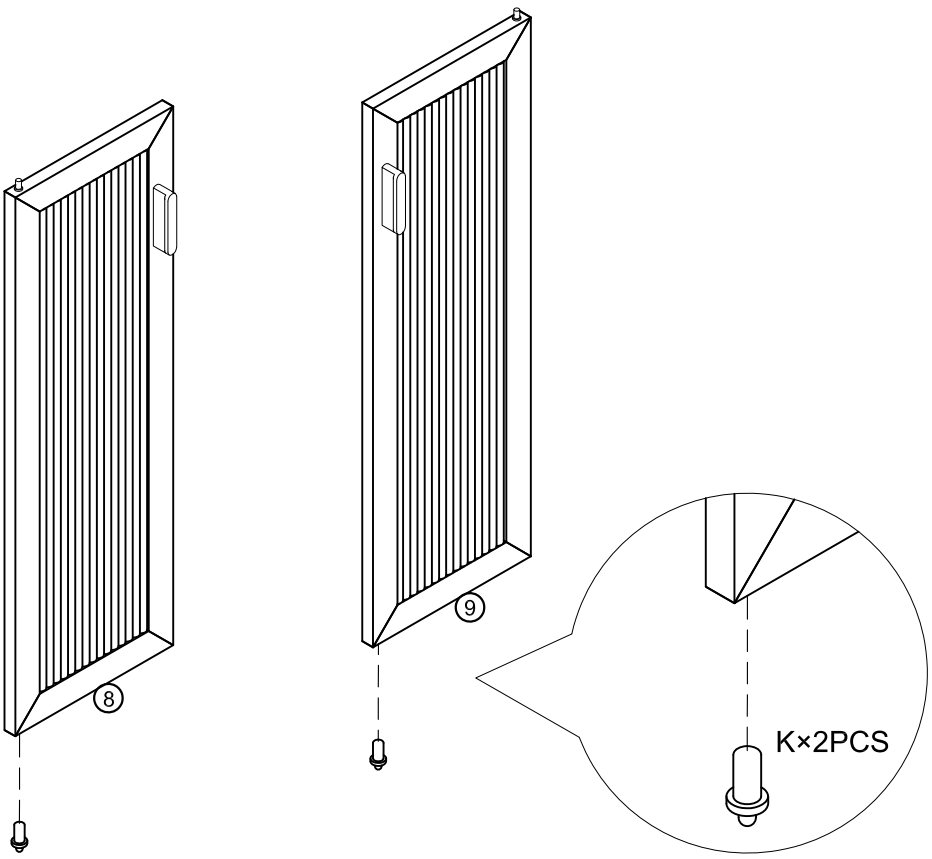

STEP30

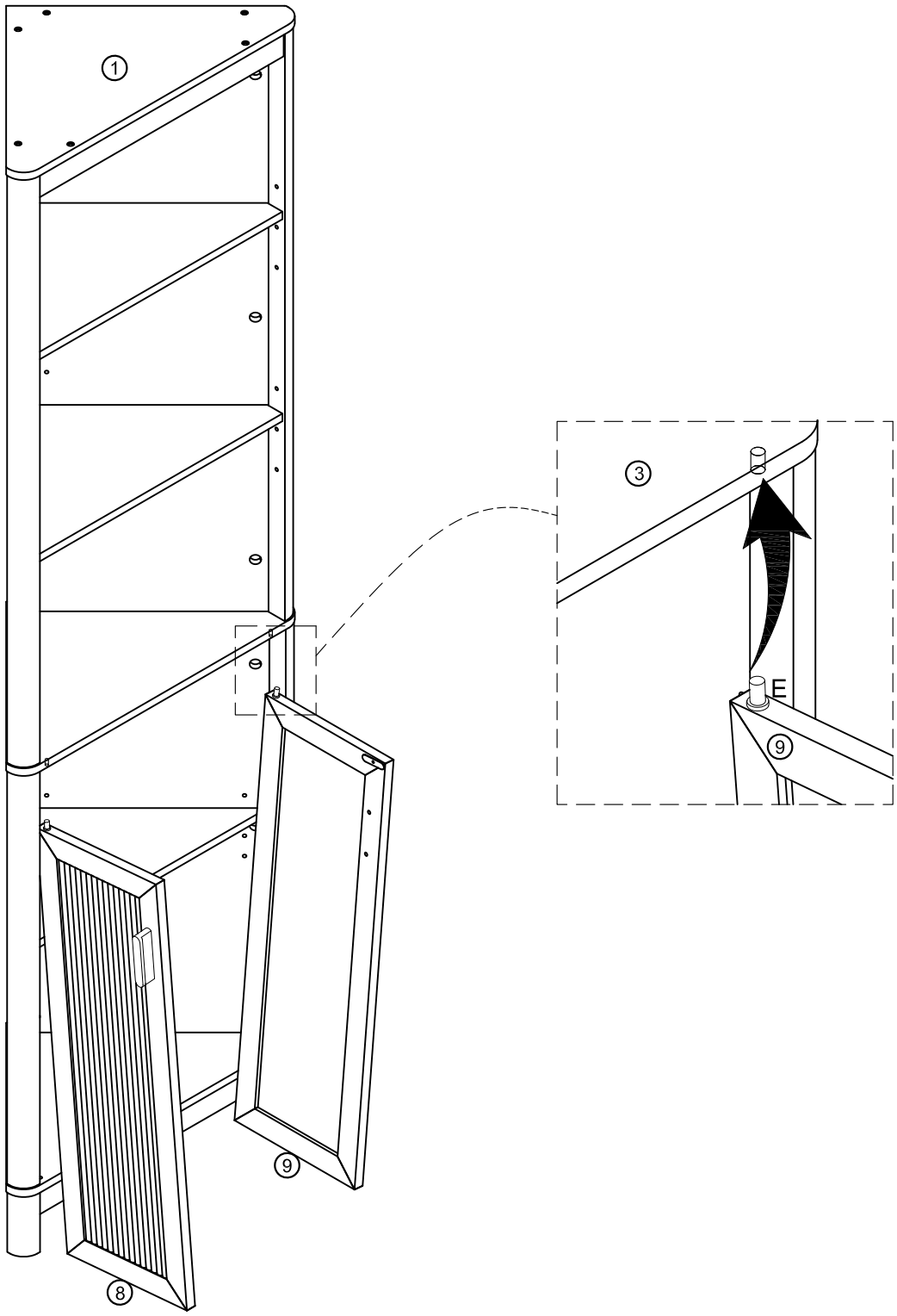

STEP31

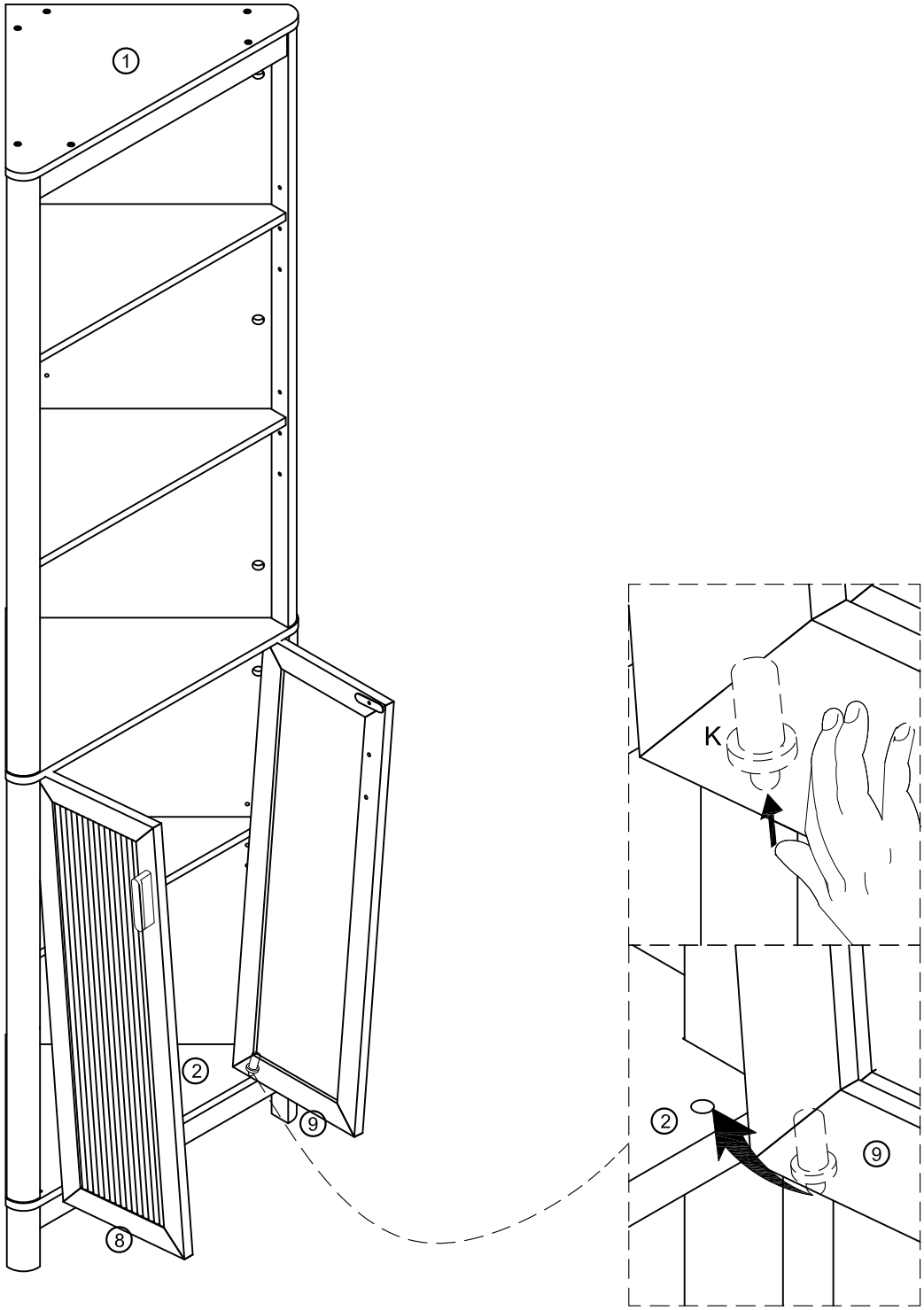

STEP32

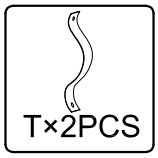

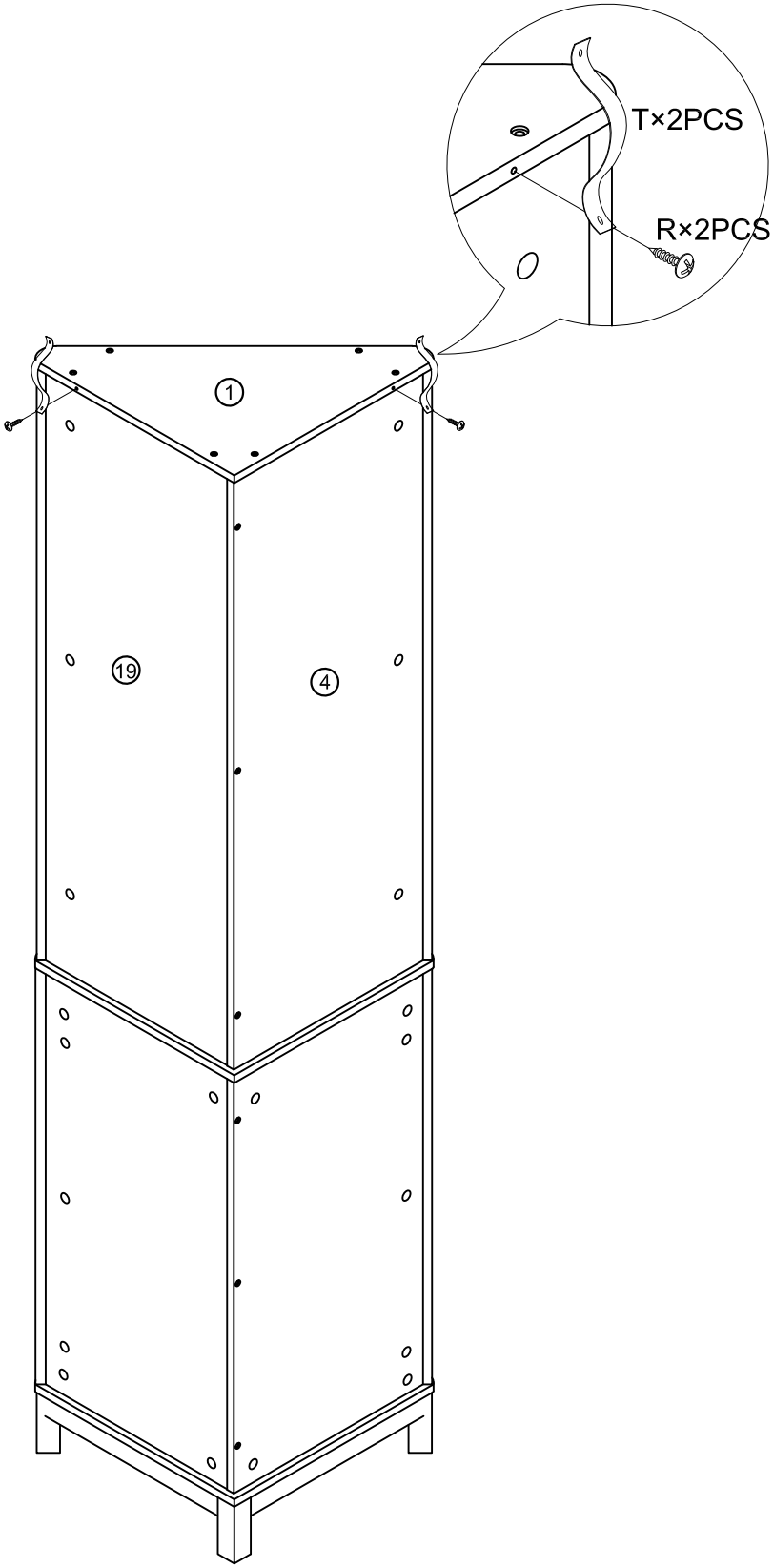

STEP33

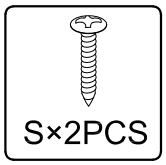

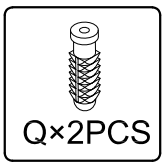

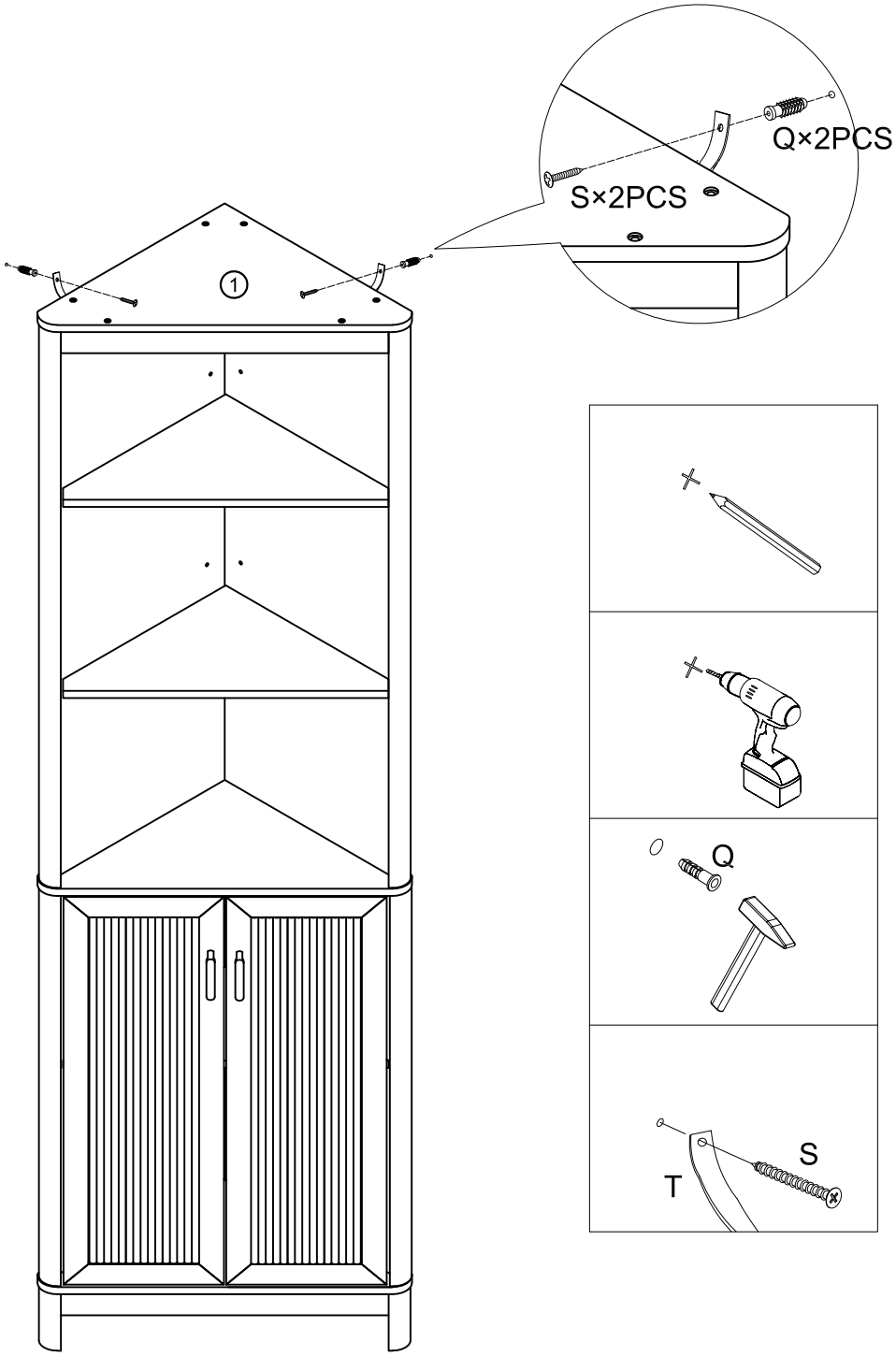

Furniture must permanently fixed to the wall stud with included anti-tipping device to prevent the furniture from tipping over.

· Mark the drill position on the wall with a pencil.
· Drill a small hole on the marked position.
· Insert a wall anchor into the drilled hole.
· Fixed the anti-tipping strap to the wall with provided screws.