OUTDOOR BENCH

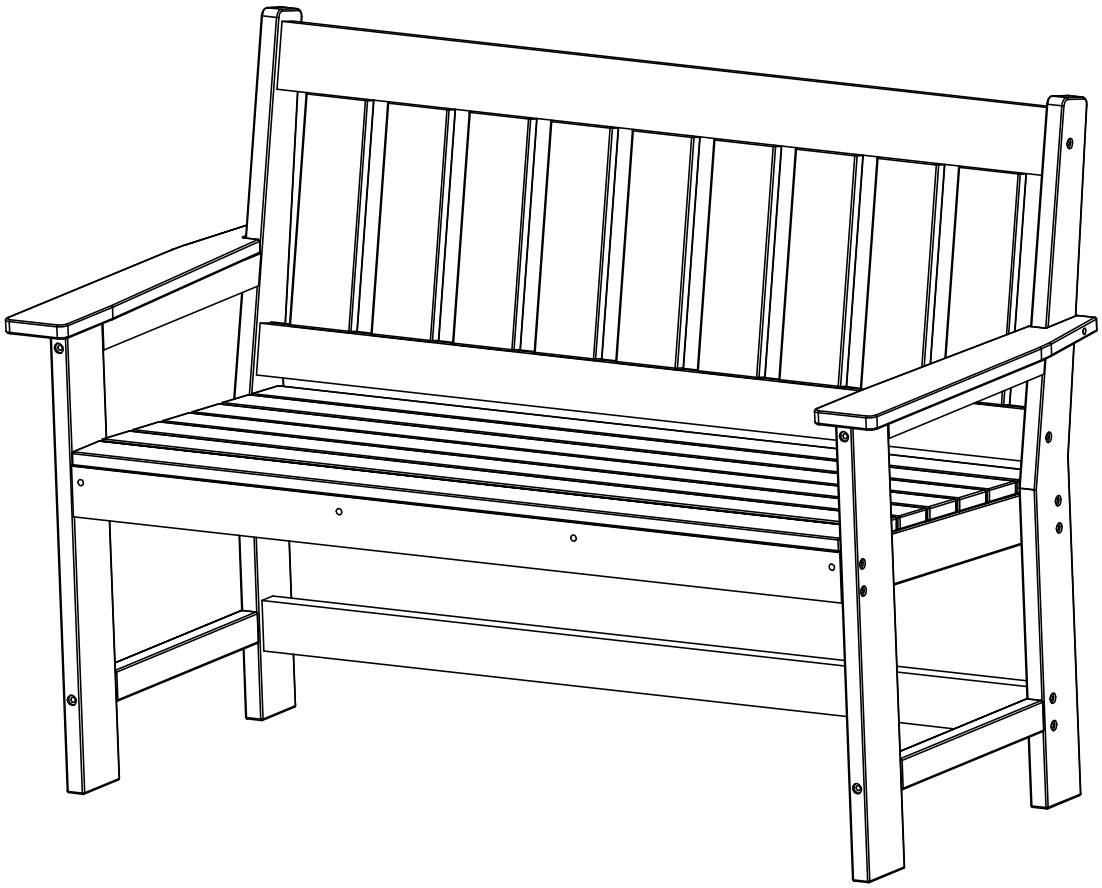

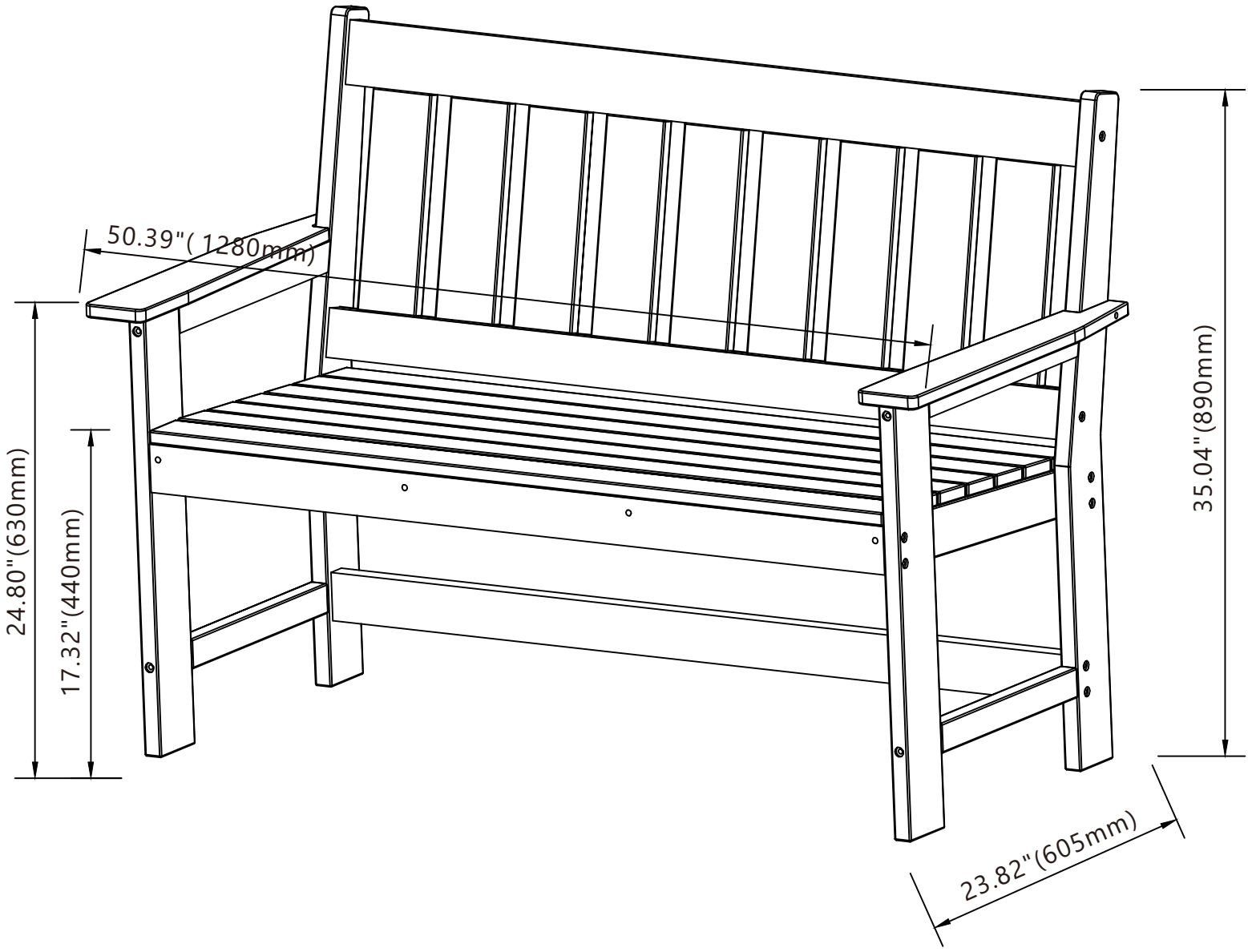
50.39"(1280mm)
24.80"(630mm)
17.32"(440mm)
35.04"(890mm)
23.82"(605mm)

WARNINGS

1. **Read and understand all instructions.** Failure to follow all instructions may result in injury and/or damage.

2. **The warnings, cautions, and instructions discussed in this manual cannot cover all possible conditions or situations that may occur.** The user must always be aware of their environment and ensure that they use the product in a safe and responsible manner.

3. **Do NOT modify the product in any way.** Unauthorized modification may impair the function and/or safety of the product, and may affect the life of the product. Any modifications will void warranty.

4. **Check for damaged parts.** Before using this product, carefully check that all parts are in good condition, and that the product will operate properly and perform its intended function. Check for damaged parts and any other conditions that may affect the operation of this product. Replace damaged or worn parts, and never use this product with a damaged part.

5. **Do NOT overload the product.**

Weight Capacity (Per Seat)	350 lb (evenly distributed)

6. **Do NOT sit on the armrest or backrest.** Tipping may occur causing injury.

7. **Do NOT allow children to climb onto or hang from backrest.** Tipping may occur causing injury.

8. **This is made with UV-stabilizers to minimize fading, however, upon exposure to the sun, all colors will fade to some degree.** To minimize possible fading: keep product covered, utilize cushions where applicable, minimize direct sunlight by storing product when not in use, or use a UV-protectant.

CARE AND MAINTENANCE

- Avoid harsh, abrasive cleaners, and other corrosive chemicals.
- Do not use metal scouring pad for cleaning. Most stains can be removed by using a mild soap and a soft-bristled brush.
- Avoid placing any direct heat source on or near the surface.
- Leaving any glassware on Chair under sunlight may result in burn marks on the surface. Please use a coaster when placing glassware on Chair .
- When not in use, cover the product with a protective cover to keep it clean and prolong its lifespan.

A	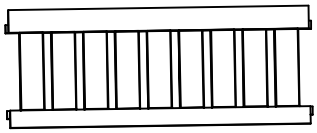	1
B	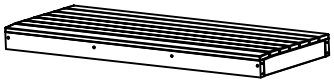	1
C	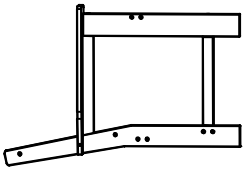	1
D	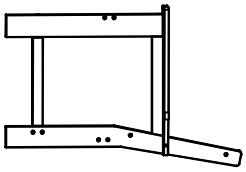	1
E		1
1	 st6*60	16
2	 S4	1

The bench should include the following parts.

Please inspect box contents to ensure you have received all components.

If you are missing any parts, need assistance with assembly or have questions, please contact our Customer Service.

Ⓐ 1X

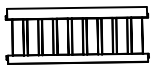

Ⓓ 1X

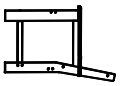

① 2X



st6*60

② 1X



S4

Step1 Assemble One Side Frame

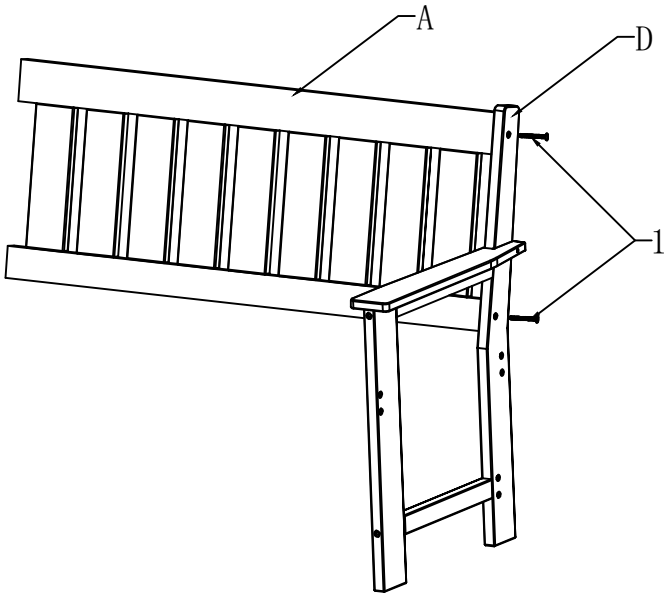

Ⓑ 1X



① 4X



st6*60

② 1X



S4

Step2 Install the Seat Panel

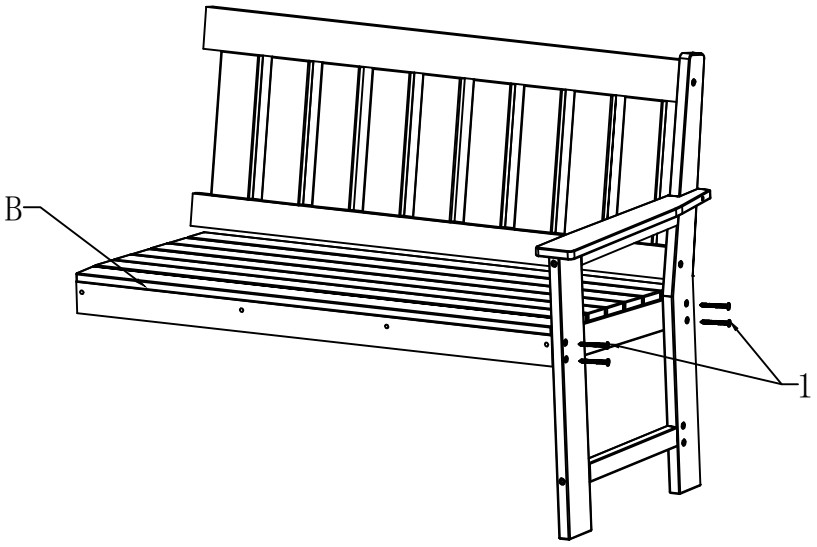

Ⓒ 1X

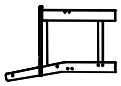

① 6X



st6*60

② 1X



S4

Step3 Attach the Opposite Side Frame

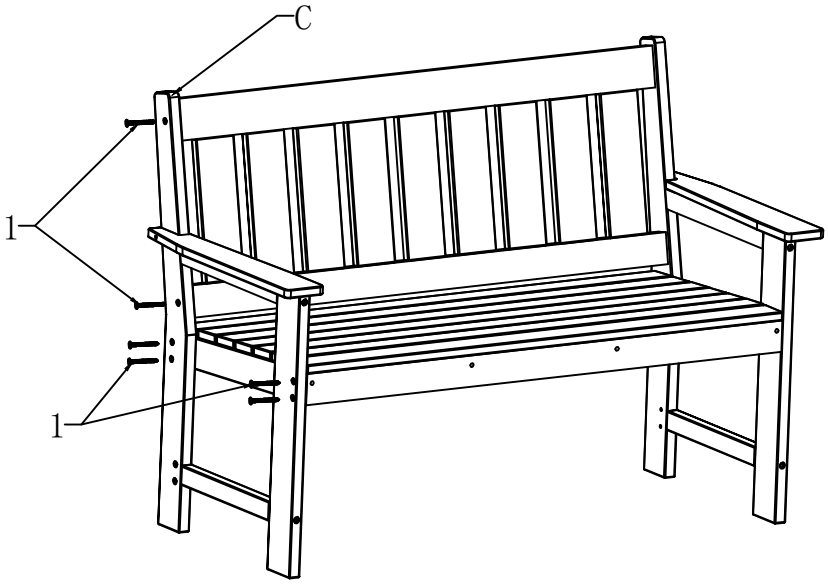

Ⓔ 1X



① 4X



st6*60

② 1X



S4

Step4 Install the Back Support Bar

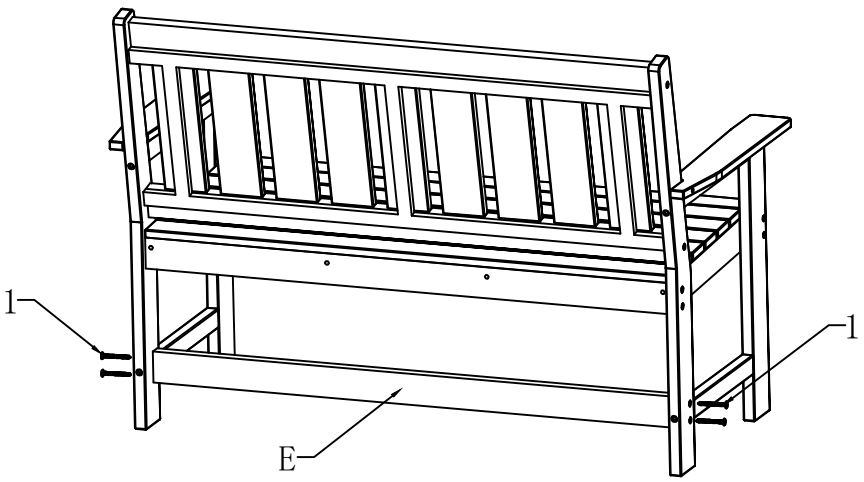

Thanks for your purchase.

At domi outdoor living, we believe in our products. That's why we provide a 12-month warranty and friendly, easy-to-reach after-sales service. So, if you have any questions about our product or assembly, please feel free to contact us. We are here for you.

Please have your order ID available if you reach out for support.
If you have damaged parts or product, please send us photos for an immediate response.