Installation & Assembly

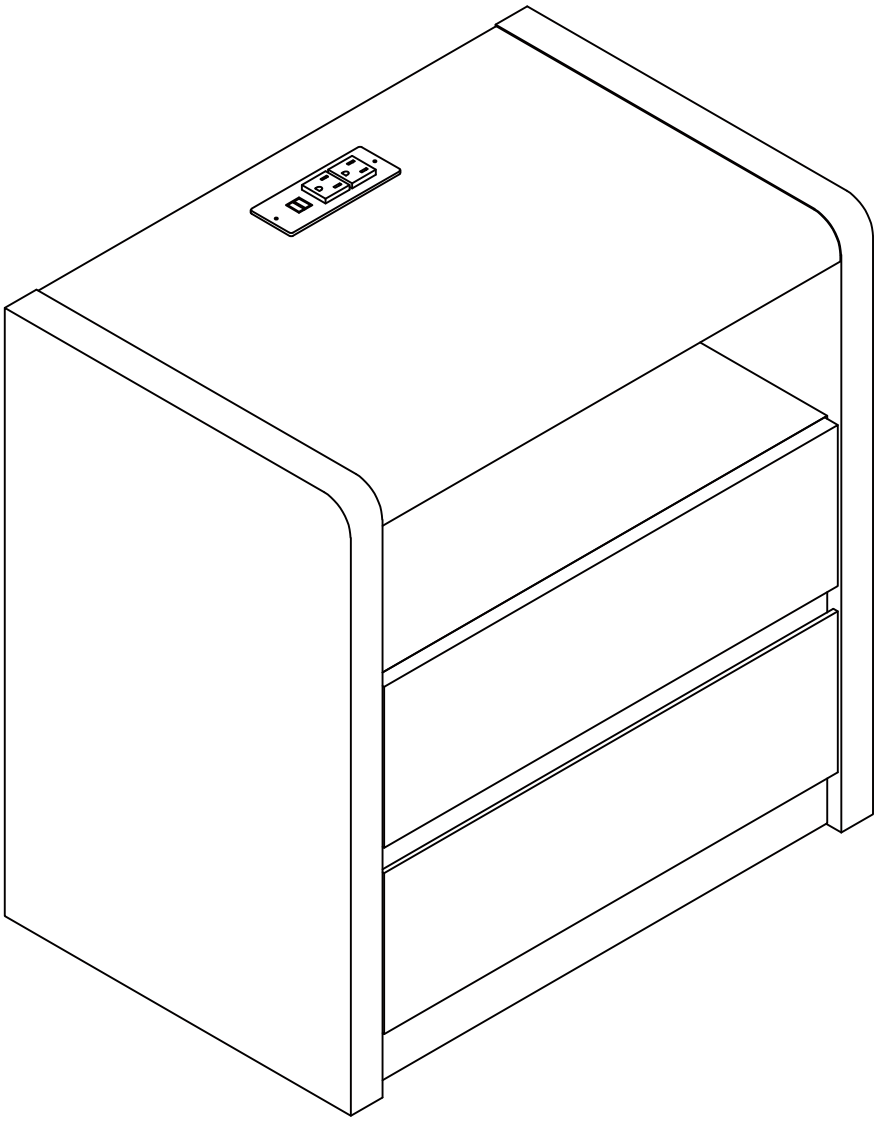

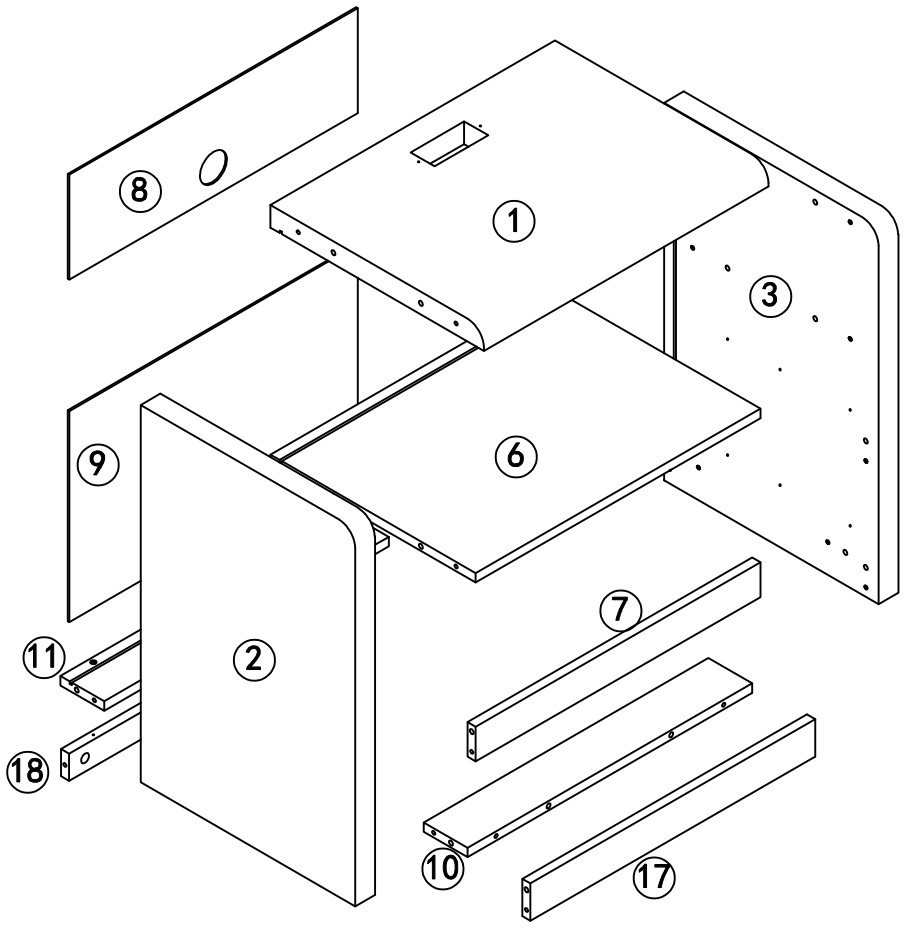
8
1
3
9
6
7
11
2
18
10
17

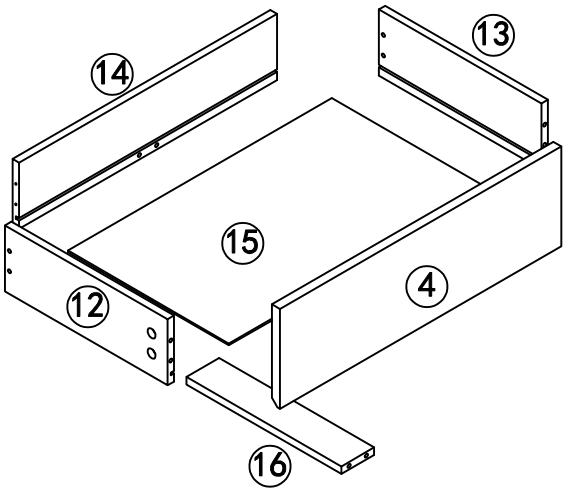
13
14
15
12
4
16

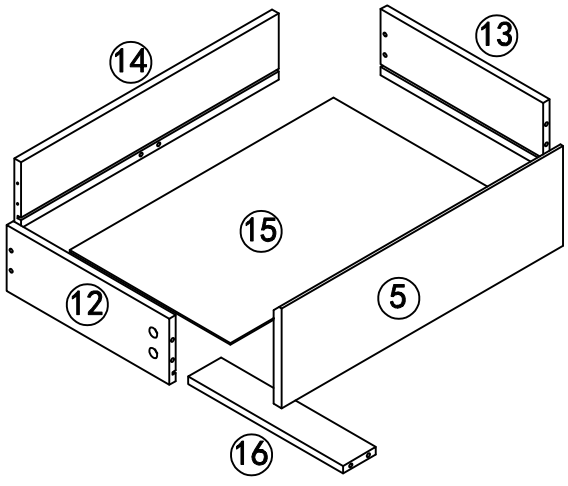
13
14
15
12
5
16

A 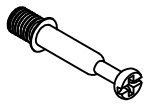 30+2PCS	B  30+2PCS	C 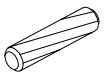 Ø8*30MM 20+2PCS	D  Ø6*30MM 4+1PCS
E 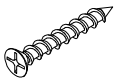 M4*30MM 12+2PCS	F  M3.5*12MM 24+2PCS	G  8+2PCS	H  M3*16MM 8+2PCS
I 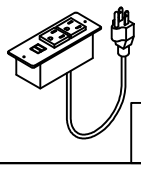 1PCS	J  4+1PCS	K  M3*12MM 2+1PCS	L 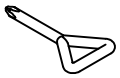 1PCS

DL 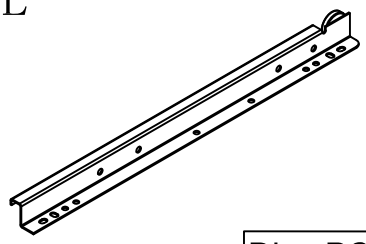 DLx2PCS	CL 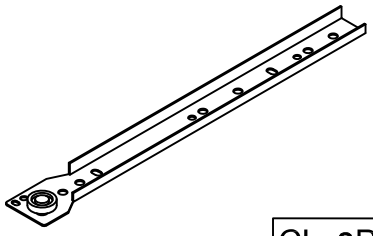 CLx2PCS
CR 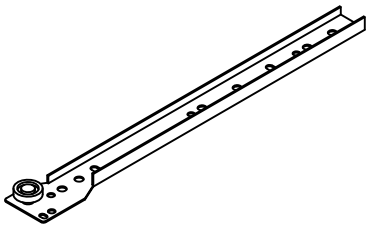 CRx2PCS	DR 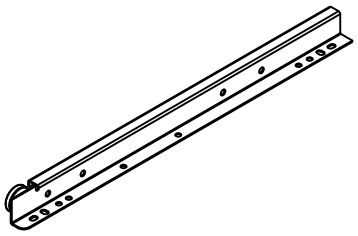 DRx2PCS

STEP 1

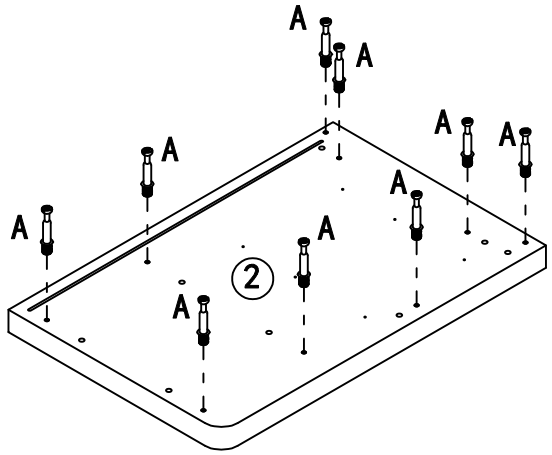

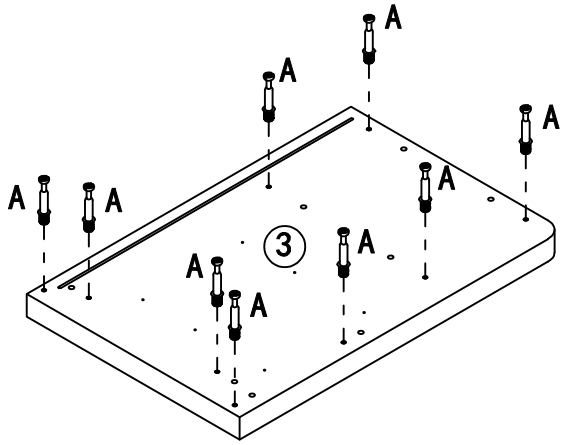

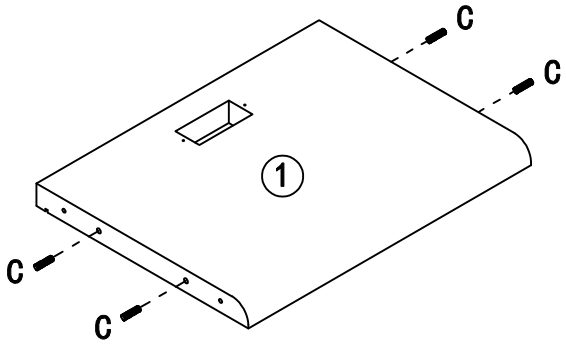

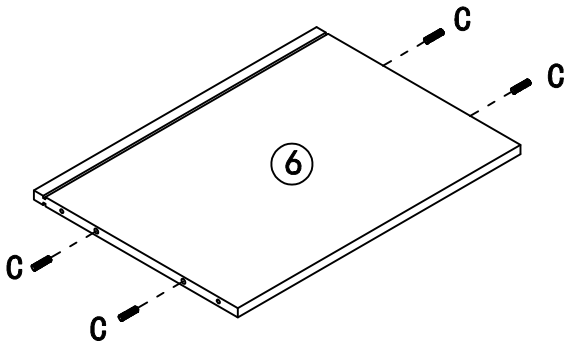

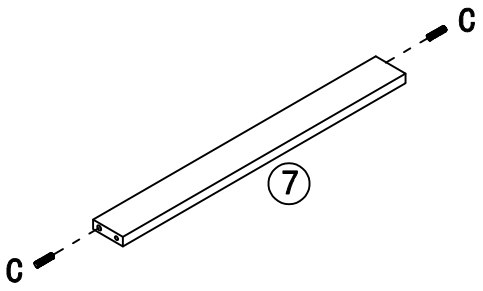

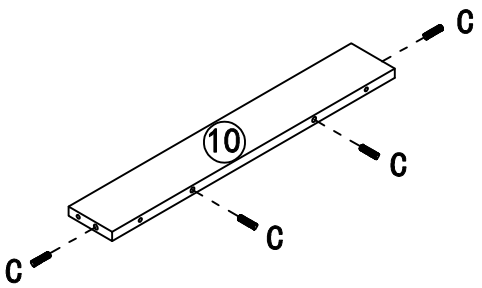

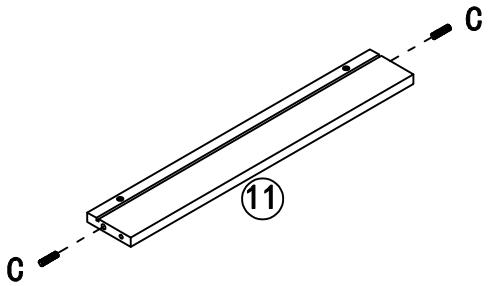

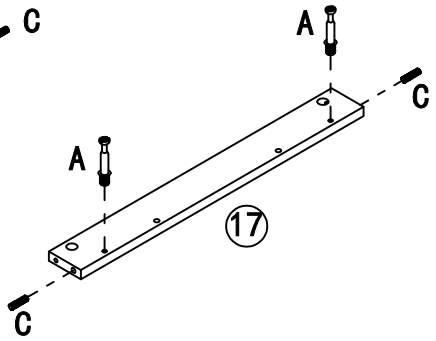

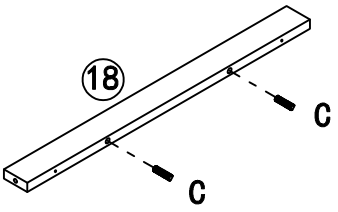

	A*20PCS		C*20PCS

STEP 2

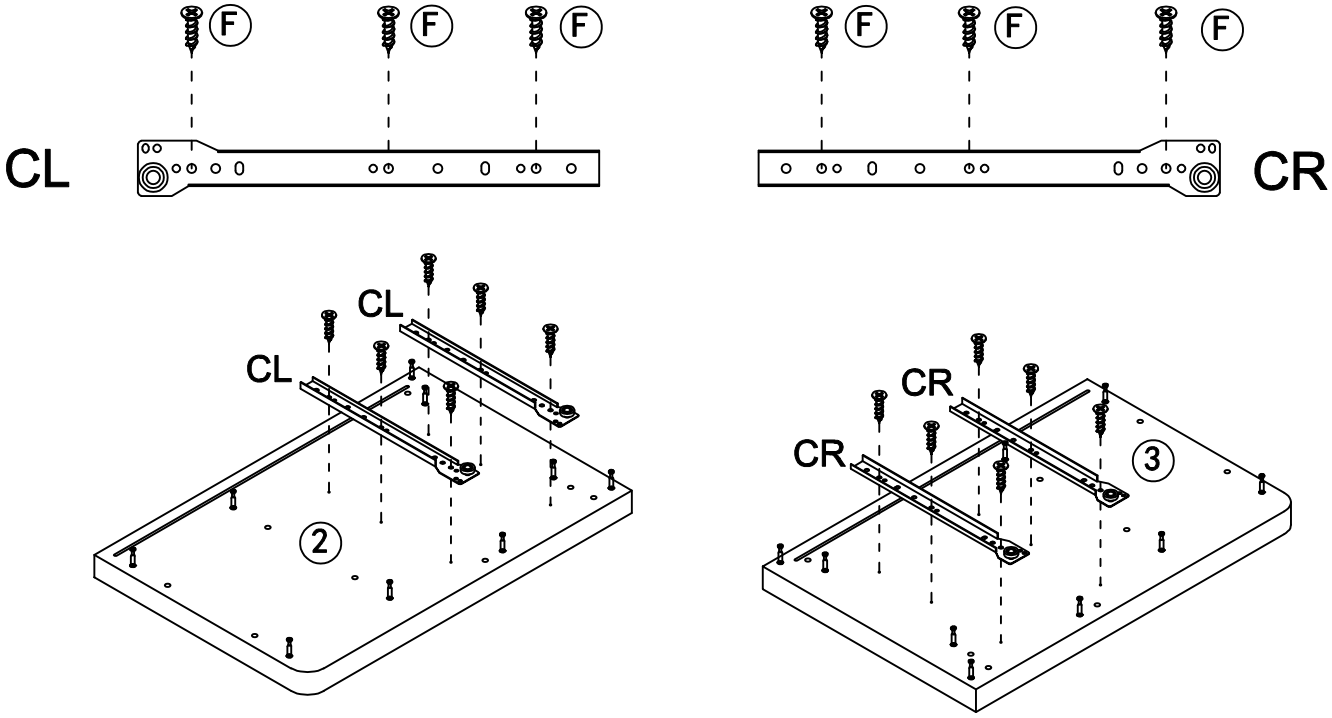

	F*12PCS		CL*2PCS		CR*2PCS

STEP 3

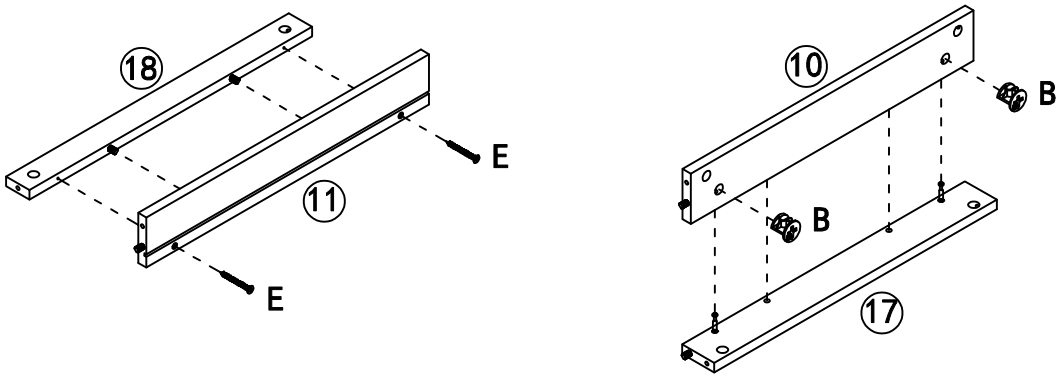

	B*2PCS	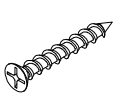	E*2PCS

STEP 4

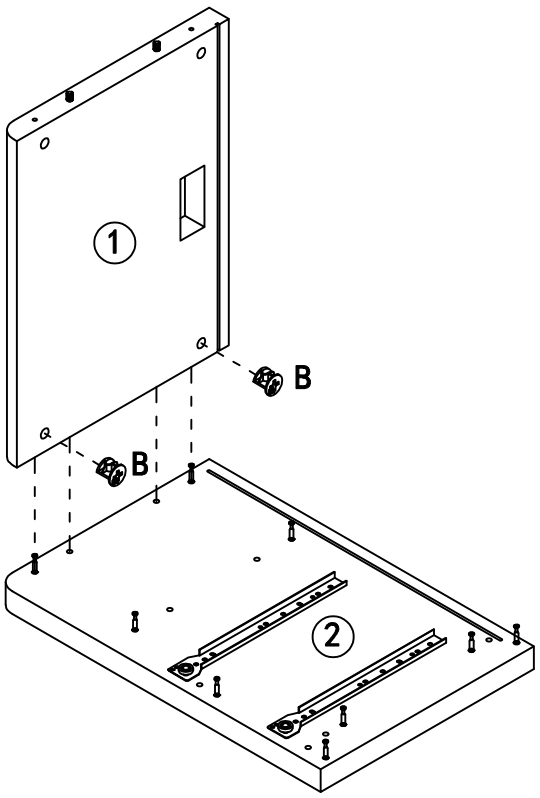

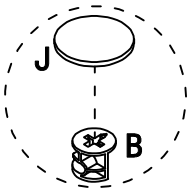

	B*2PCS		J*2PCS

STEP 5

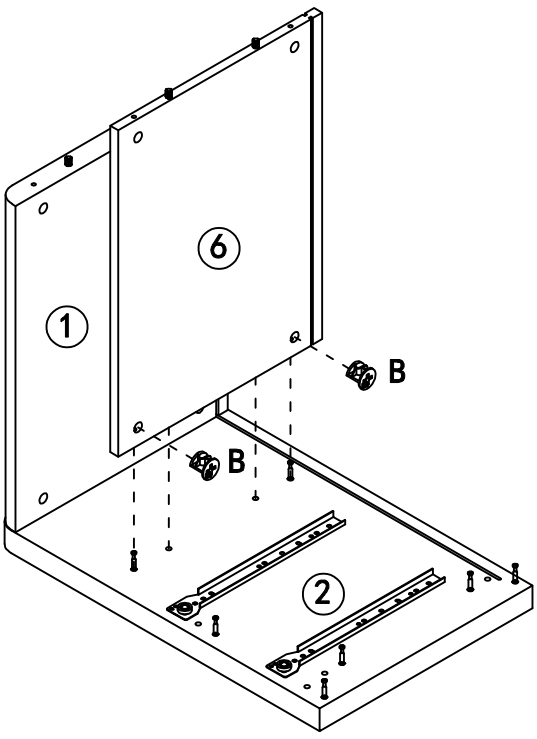

	B*2PCS

STEP 6

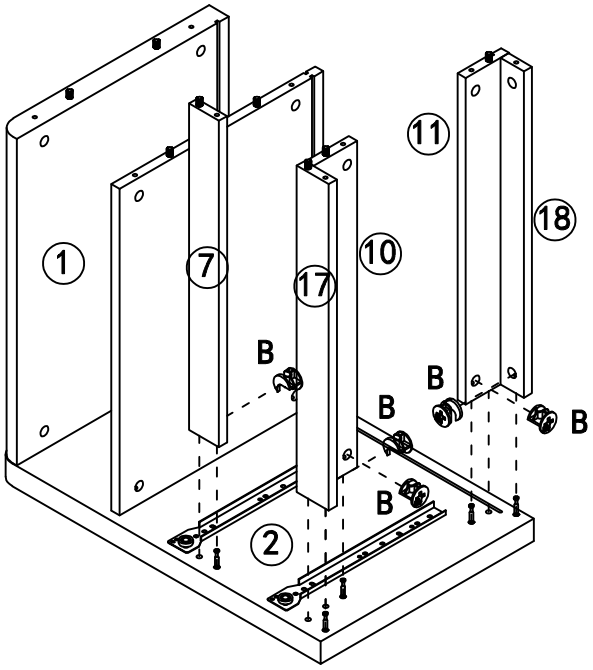

	B*5PCS

STEP 7

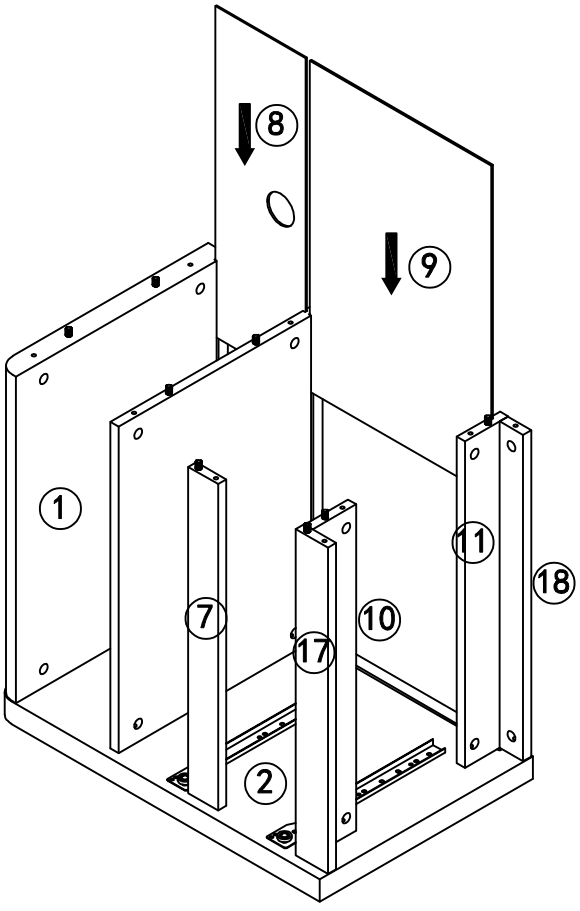

STEP 8

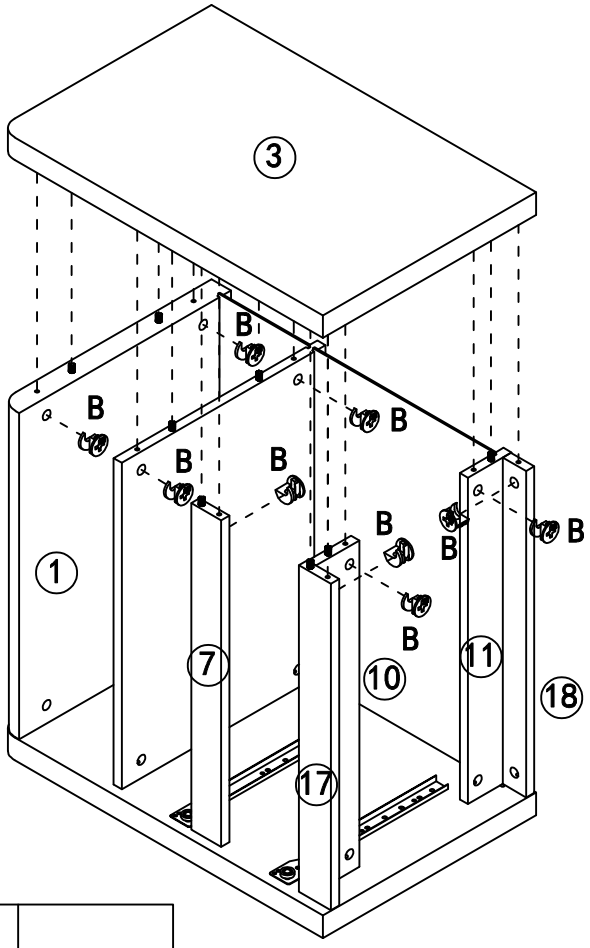

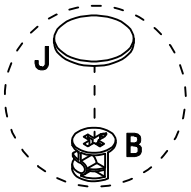

	B*9PCS		J*2PCS

STEP 9

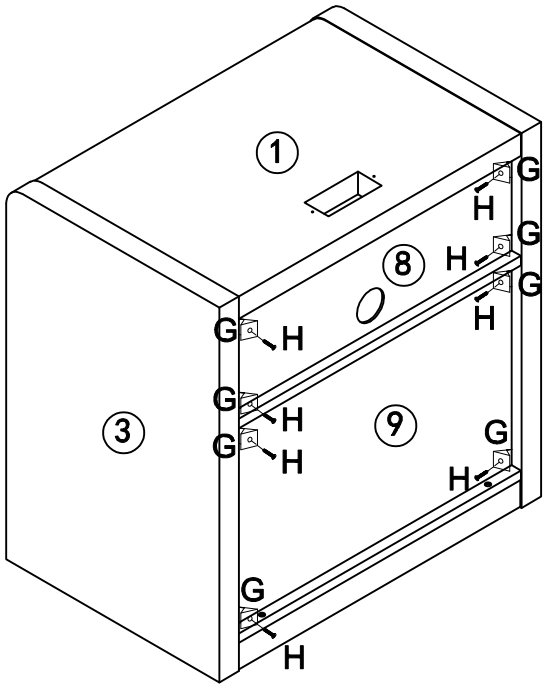

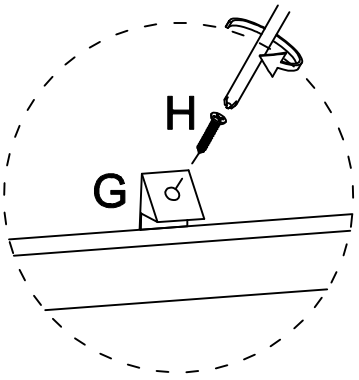

	G*8PCS		H*8PCS

STEP 10

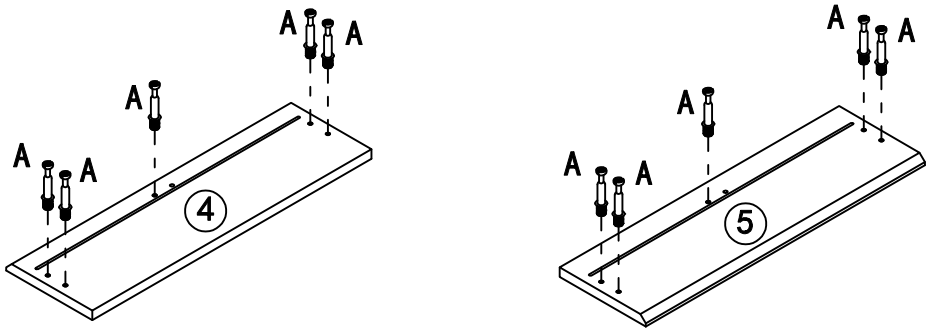

	A*10PCS

STEP 11

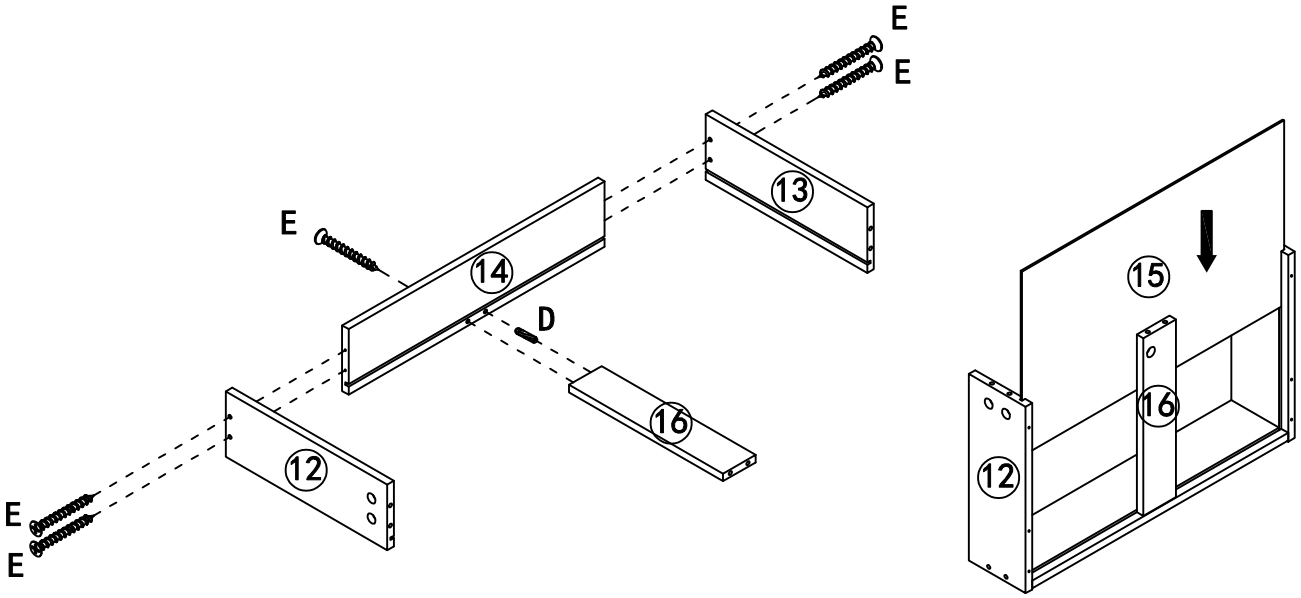

x2

	D*2PCS	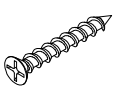	E*10PCS

STEP 12

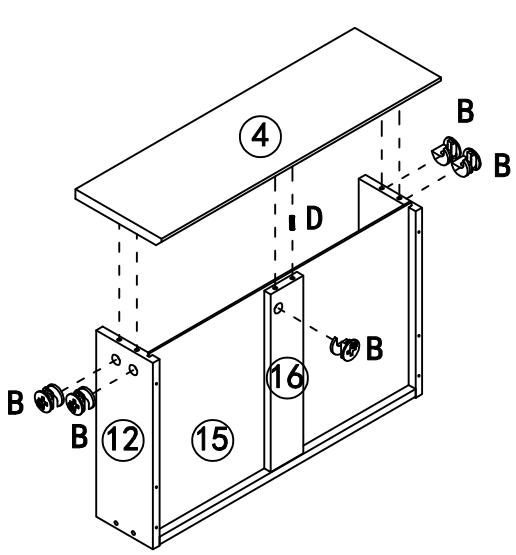

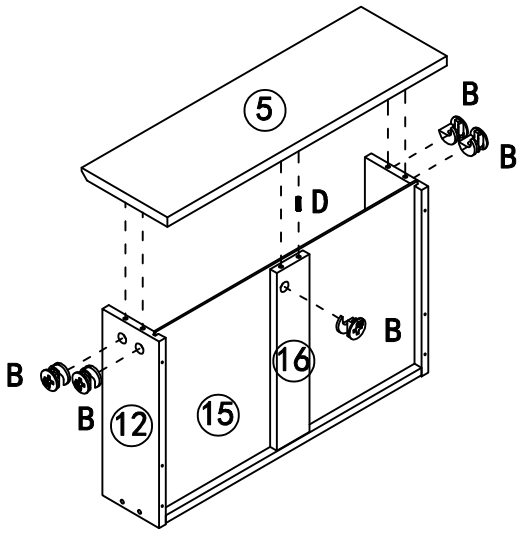

	B*10PCS		D*2PCS

STEP 13

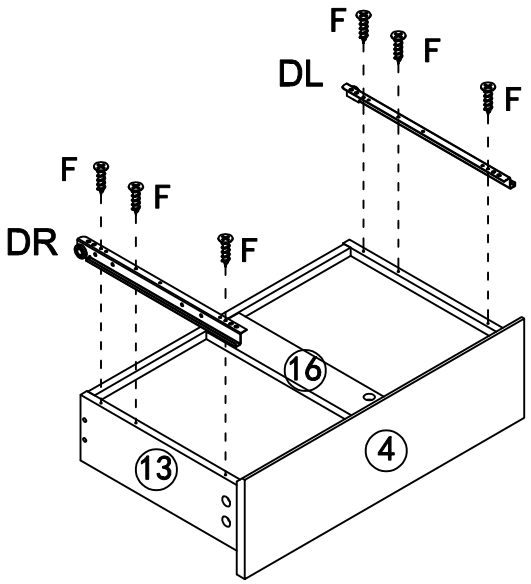

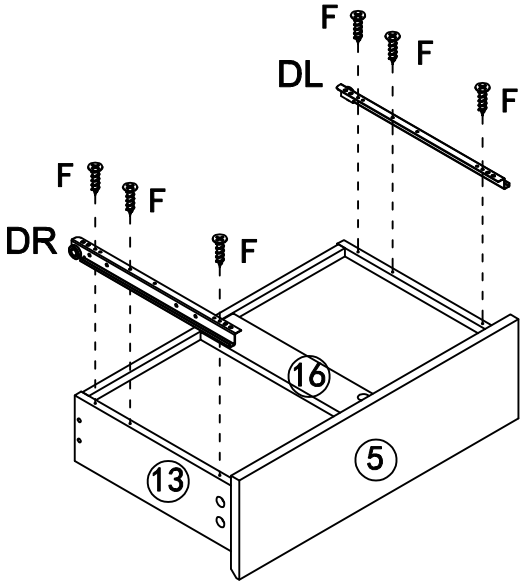

	F*12PCS		DL*2PCS	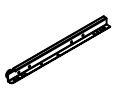	DR*2PCS

STEP 14

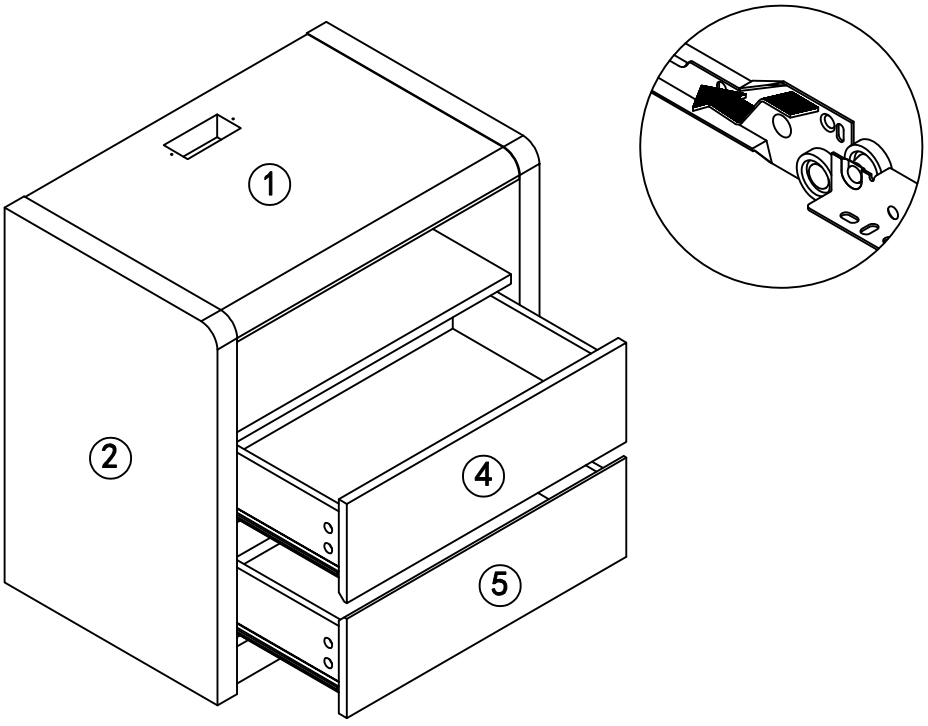

STEP 15

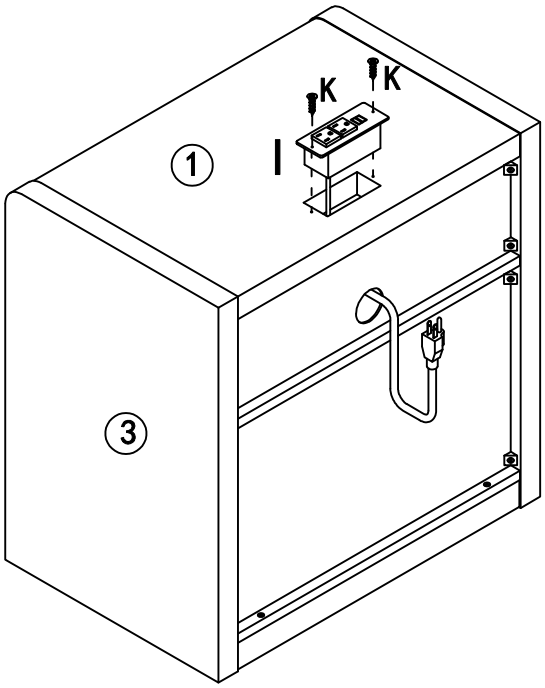

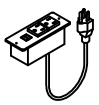	I*1PCS		K*2PCS