Assembly Drawing

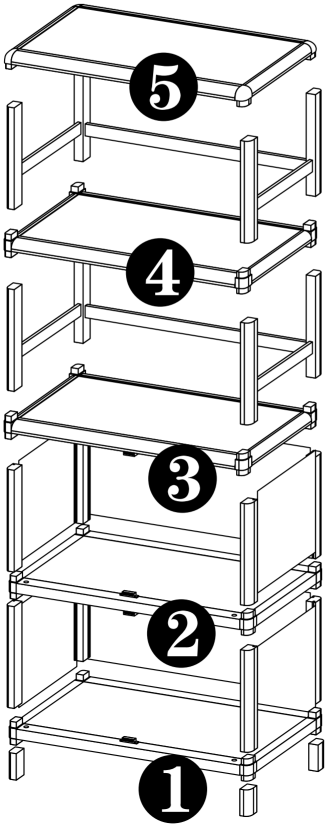

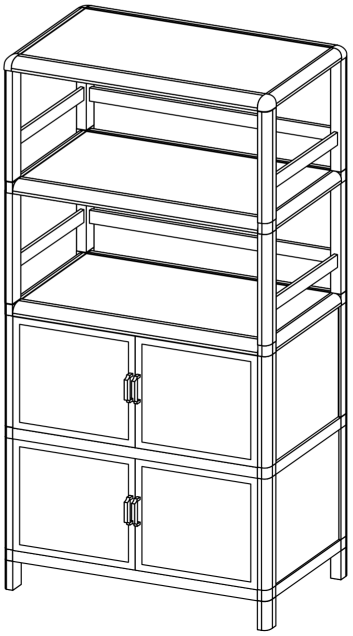

A	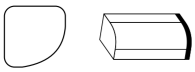 Base legs X4	G	 Lower cabinet side panels X4
B	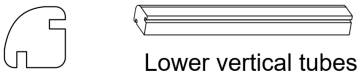 Lower vertical tubes X8	H	 X2 Lower cabinet back panels
C	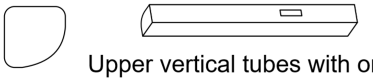 Upper vertical tubes with one hole X4	I	 Doors X4
D	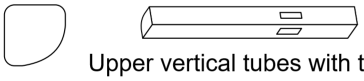 Upper vertical tubes with two holes X4	J	 Pulls X4
E	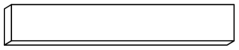 Long tube X2	K	 Screws X8
F	 Short tube X4		

1 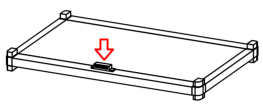 X1 Bottom① shelf with one magnet, magnet facing up.	2 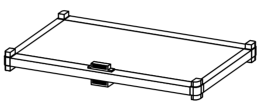 X1 Shelf ② with two magnets.	3 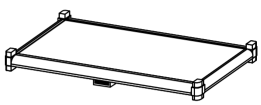 X1 Shelf ③ with one magnet, magnet facing downward.
4  X1 Shelf ④ without magnet	5  X1 Shelf ⑤ top shelf without magnet	

1 Flip the bottom shelf ① over. Insert Base Leg Tube A into the four plastic fittings of the shelf and tap tight with a rubber mallet.

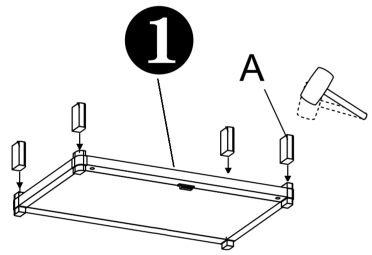

2 Insert Tube B into the four corner plastic parts of the shelf and tap tight with a rubber mallet. Slide Side Panel G and Back Panel H into the tube grooves. Align the four plastic parts of Shelf ② with the tube ends and gently tap tight.

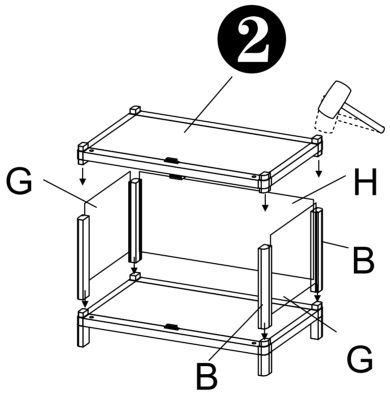

3 Follow the same assembly procedure as Step 2.

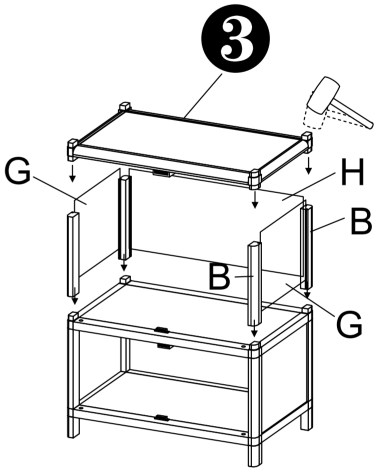

4 Insert Short Tube F into the holes of Tube C & Tube D. Insert Long Tube E into the hole of Tube D. Align the four vertical tubes with the shelf plastic parts and tap tight with a rubber mallet.

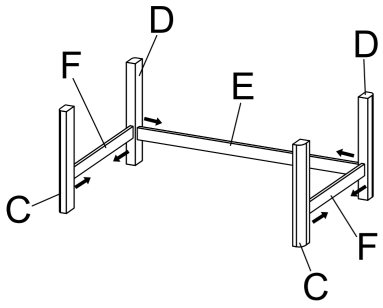

5 Align the four plastic parts of Shelf ④ with the tube ends and tap tight using a rubber mallet.

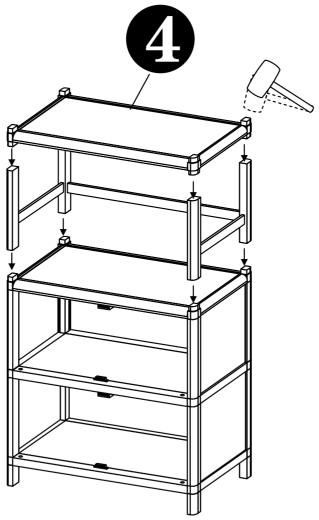

6 Follow the same assembly procedure as Step 4.

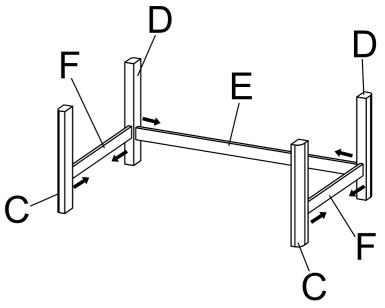

7

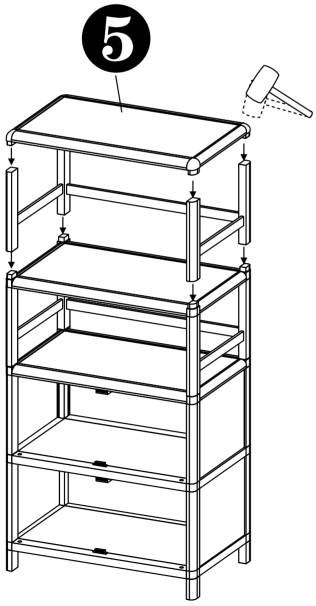

8

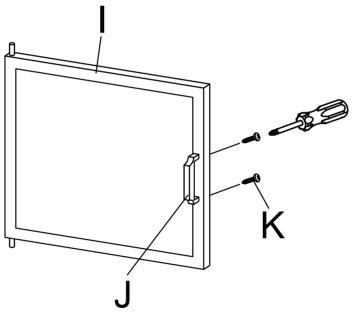

9

