ASSEMBLY INSTRUCTION

ITEM NO.:N719P355914-N719P355915-N719P355916

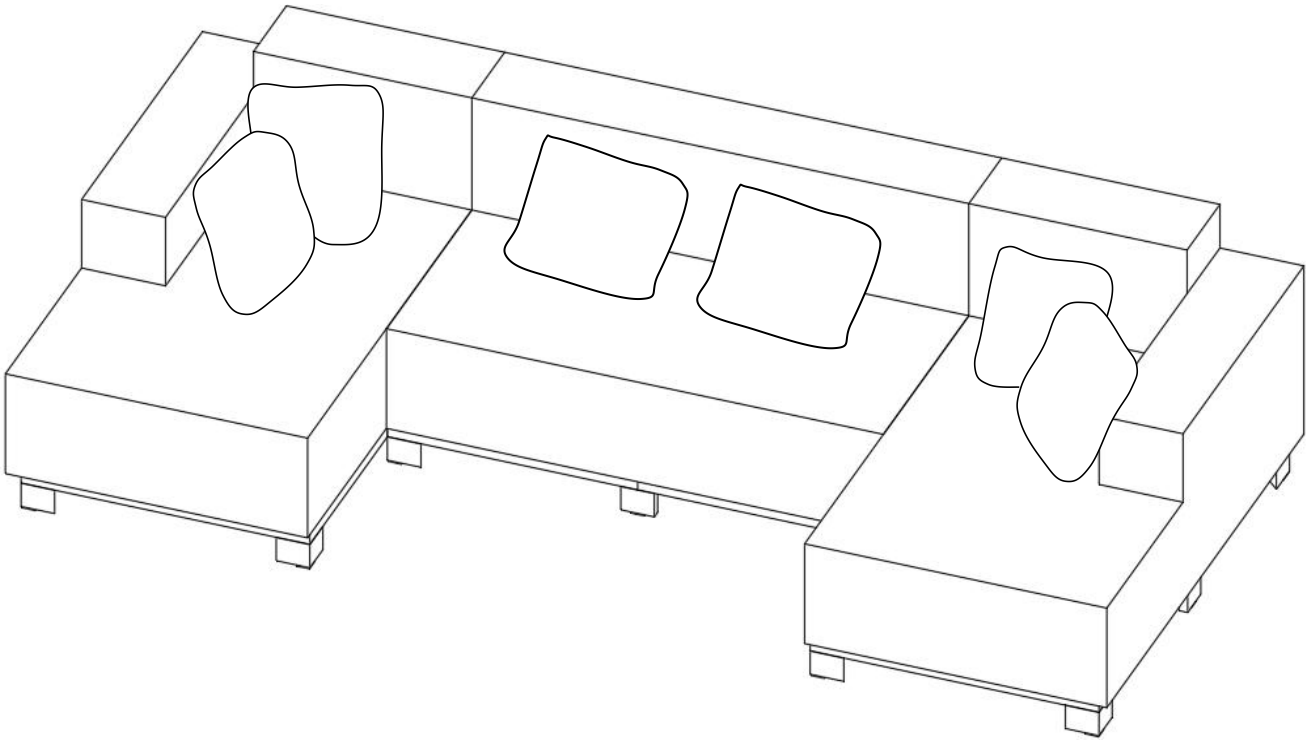

N719P355914- COMPONENT LIST

NO	DRAWING	QTY	DESCRIPTION
B	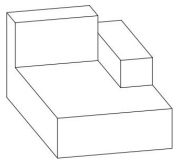	1	Left-side sofa
D	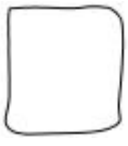	2	Pillow
E		10	Round Tube
F		1	H-shaped Round Tube
G		2	Square Tube 1
H		1	Square Tube 2
I		2	Square Tube 4
L	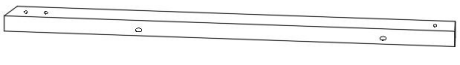	1	Square Tube 3
O	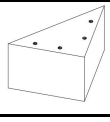	4	Triangular Sofa Leg
P	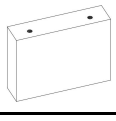	2	Rectangular Sofa Leg
R	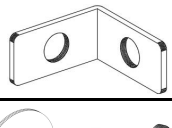	4	L-Shaped Gasket
V	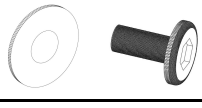	12	Bolt15mm
U		20	Bolt70mm

N719P355915- COMPONENT LIST

NO	DRAWING	QTY	DESCRIPTION
C	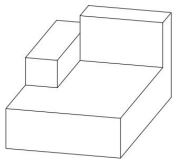	1	Right-side sofa
D	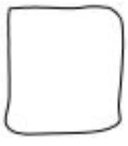	2	Pillow
E		10	Round Tube
F		1	H-shaped Round Tube
G		1	Square Tube 1
H		2	Square Tube 2
I	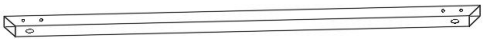	2	Square Tube 4
K	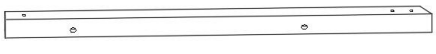	1	Square Tube 3
O	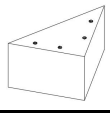	4	Triangular Sofa Leg
P	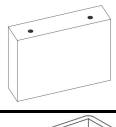	2	Rectangular Sofa Leg
R	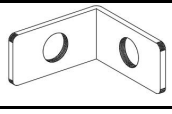	4	L-Shaped Gasket
V	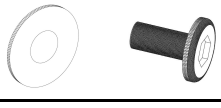	12	Bolt15mm
U		20	Bolt70mm

N719P355916- COMPONENT LIST

NO	DRAWING	QTY	DESCRIPTION
A	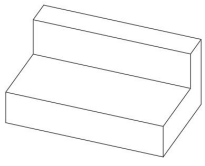	1	Middle sofa
D	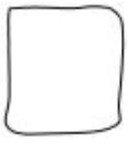	2	Pillow
E		10	Round Tube
F		1	H-shaped Round Tube
J		2	Square Tube 3
M		2	Square Tube 2
N		2	Square Tube 1
O	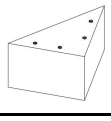	4	Triangular Sofa Leg
P	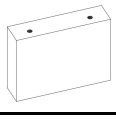	2	Rectangular Sofa Leg
Q		4	Tie Rod Screw
R	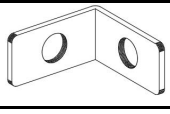	4	L-Shaped Gasket
S	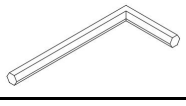	2	Allen Screwdriver
T	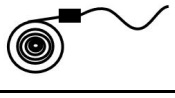	1	LED Strip Light
V	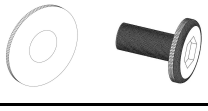	12	Bolt15mm
U		20	Bolt70mm

N719P355916- COMPONENT LIST

NO	DRAWING	QTY	DESCRIPTION
W		1	Box Opener

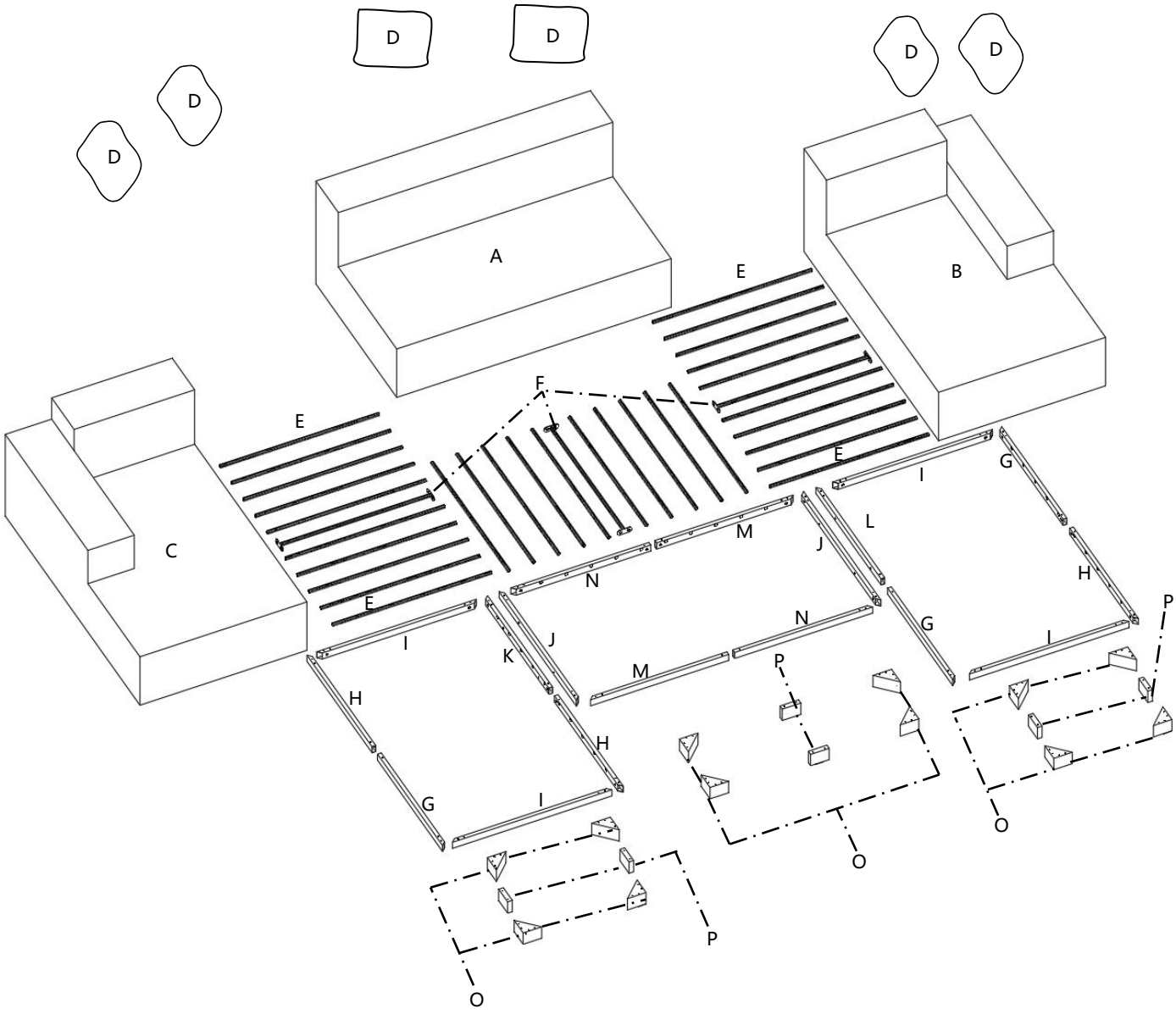

Q  x4pc

R 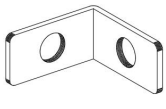 x12pc

S 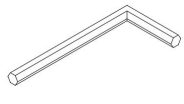 x2pc

T 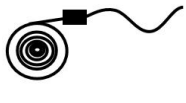 x1pc

U  x60pc

V 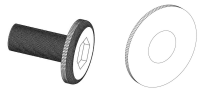 x36pc

W  x1pc

PARTS LIST

A 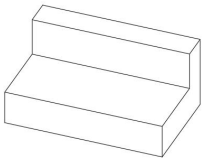	B 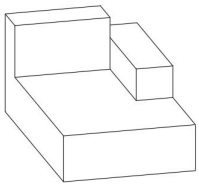	C 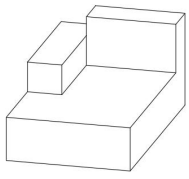	D 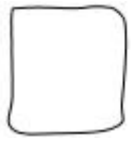	E 
Middle sofa x1PC	Left-side sofa x1PC	Right-side sofa x1PC	Pillow x6PC	Round Tube x30PC
F 	G 	H 	I 	J 
H-shaped Round Tube x3PC	Square Tube 1 x3PC	Square Tube 2 x3PC	Square Tube 3 x4PC	Square Tube 4 x2PC
K 	L 	M 	N 	O 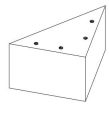
Square Tube 5 x1PC	Square Tube 6 x1PC	Square Tube 7 x2PC	Square Tube 8 x2PC	Triangular Sofa Leg x12PC
P 	T 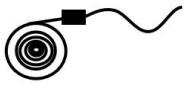	W 		
Rectangular Sofa Leg x6PC	LED Strip Light x1PC	Box Opener x1PC		

HARDWARE

Q 	R 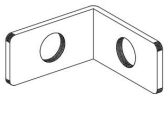	S 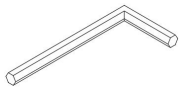	U 	V 
Tie Rod Screw x4PC	L-Shaped Gasket x12PC	Allen Screwdriver x2PC	Bolt70mm x60PC	Bolt15mm x36PC

*** Take out the** B D E F G H I L O P R U V

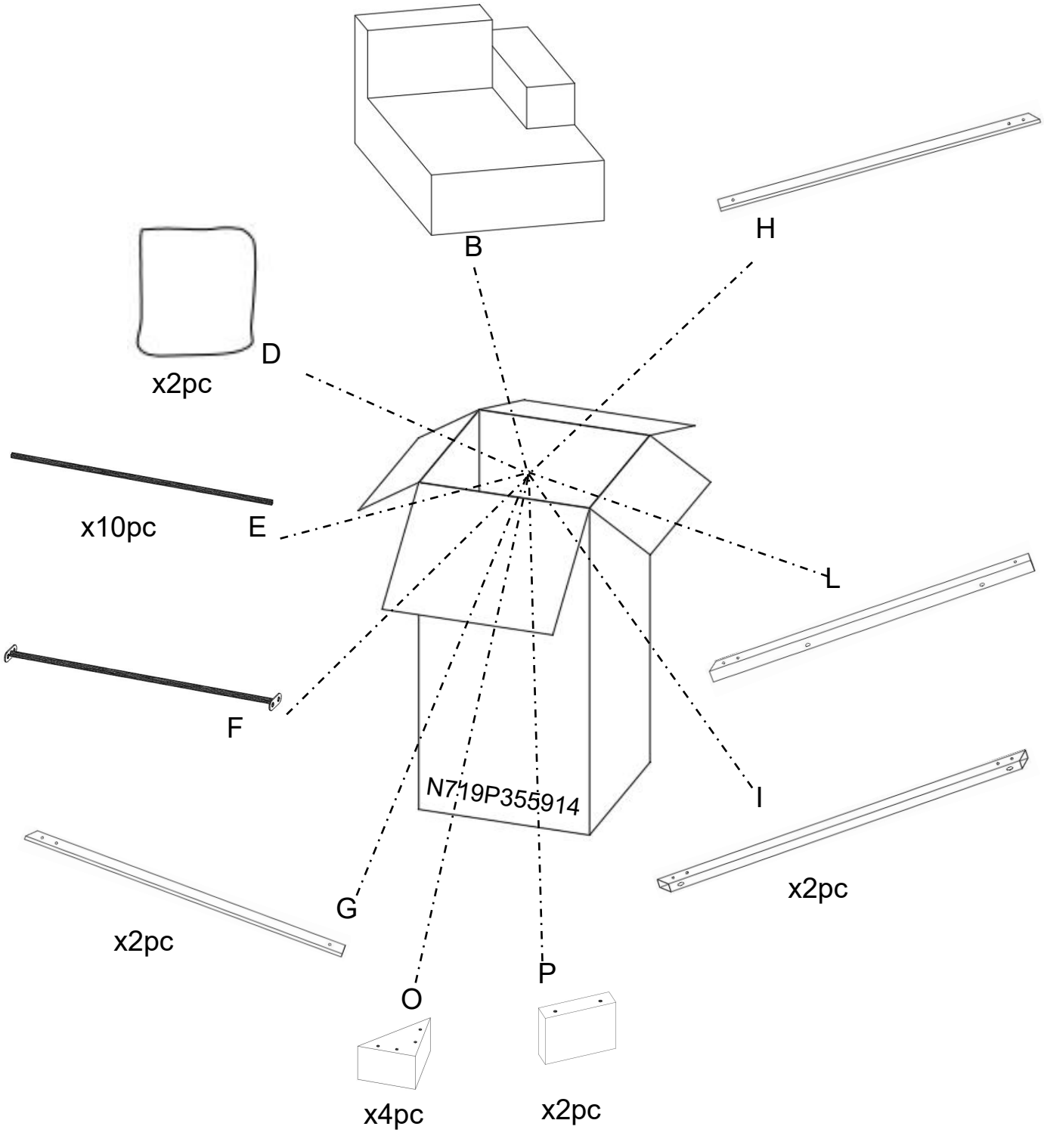

R 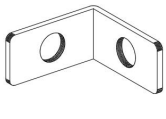 x4pc U  x20pc V 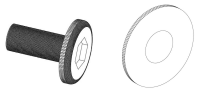 x12pc

*** Take out the** C D E F G H I K O P R U V

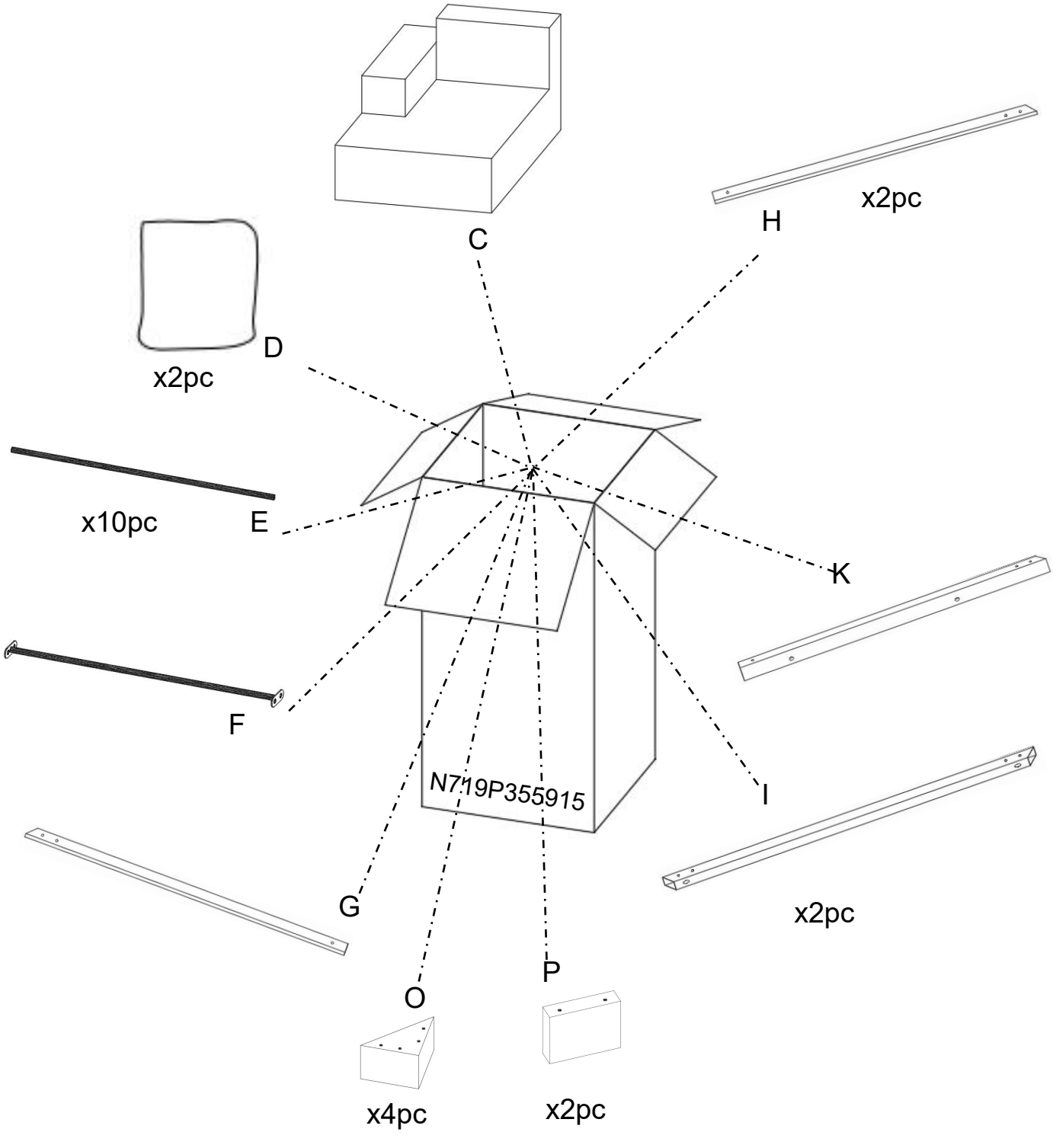

R 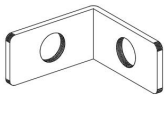 x4pc U  x20pc V 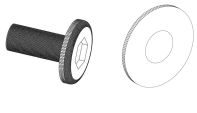 x12pc

*** Take out the** A D E F J M N O P Q R S T U V W

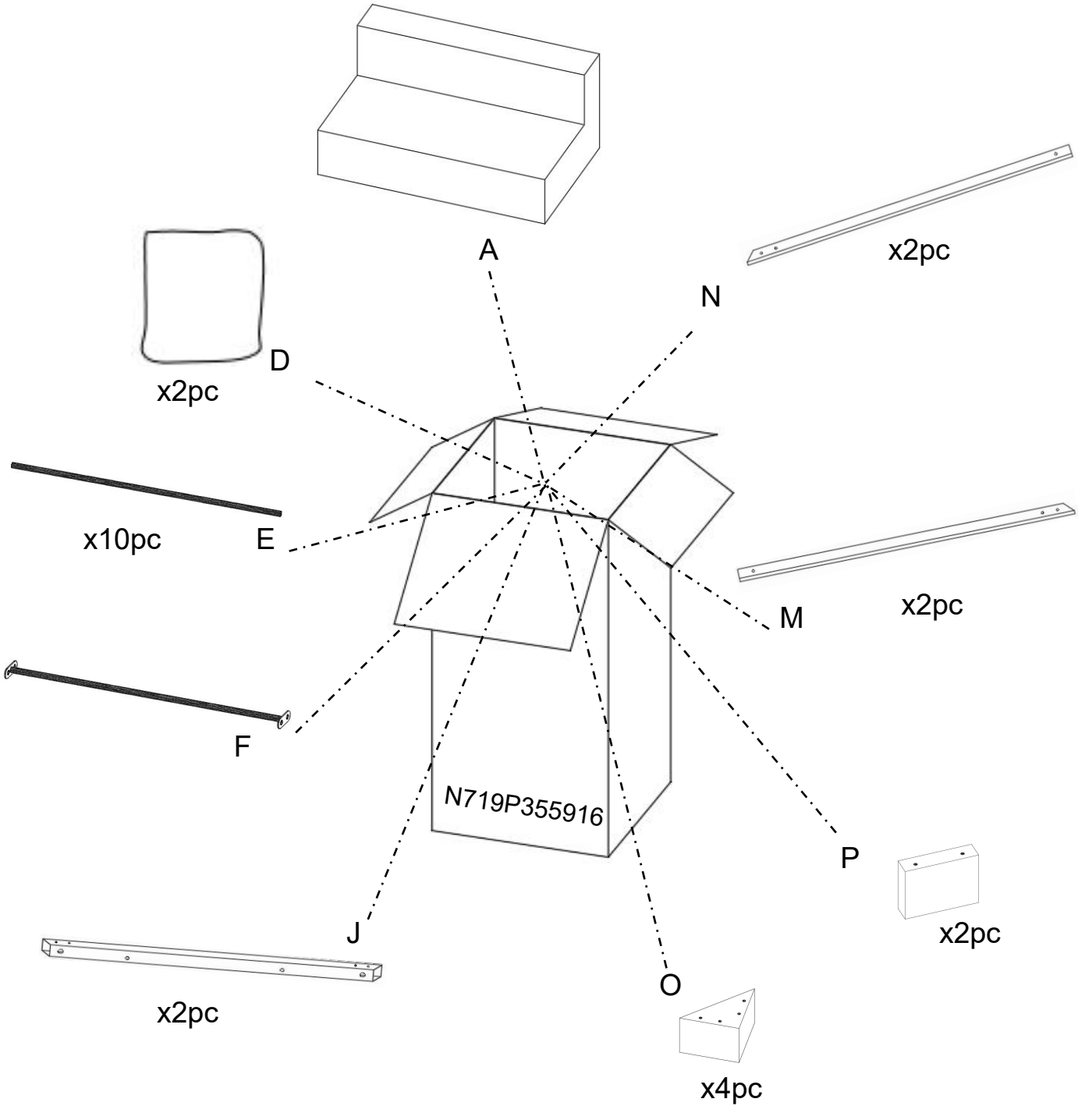


Q x4pc

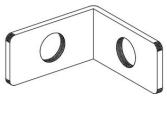
R x4pc

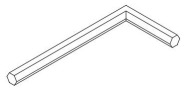
S x2pc

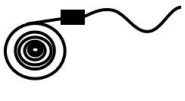
T x1pc


U x20pc

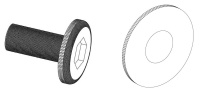
V x12pc


W x1pc

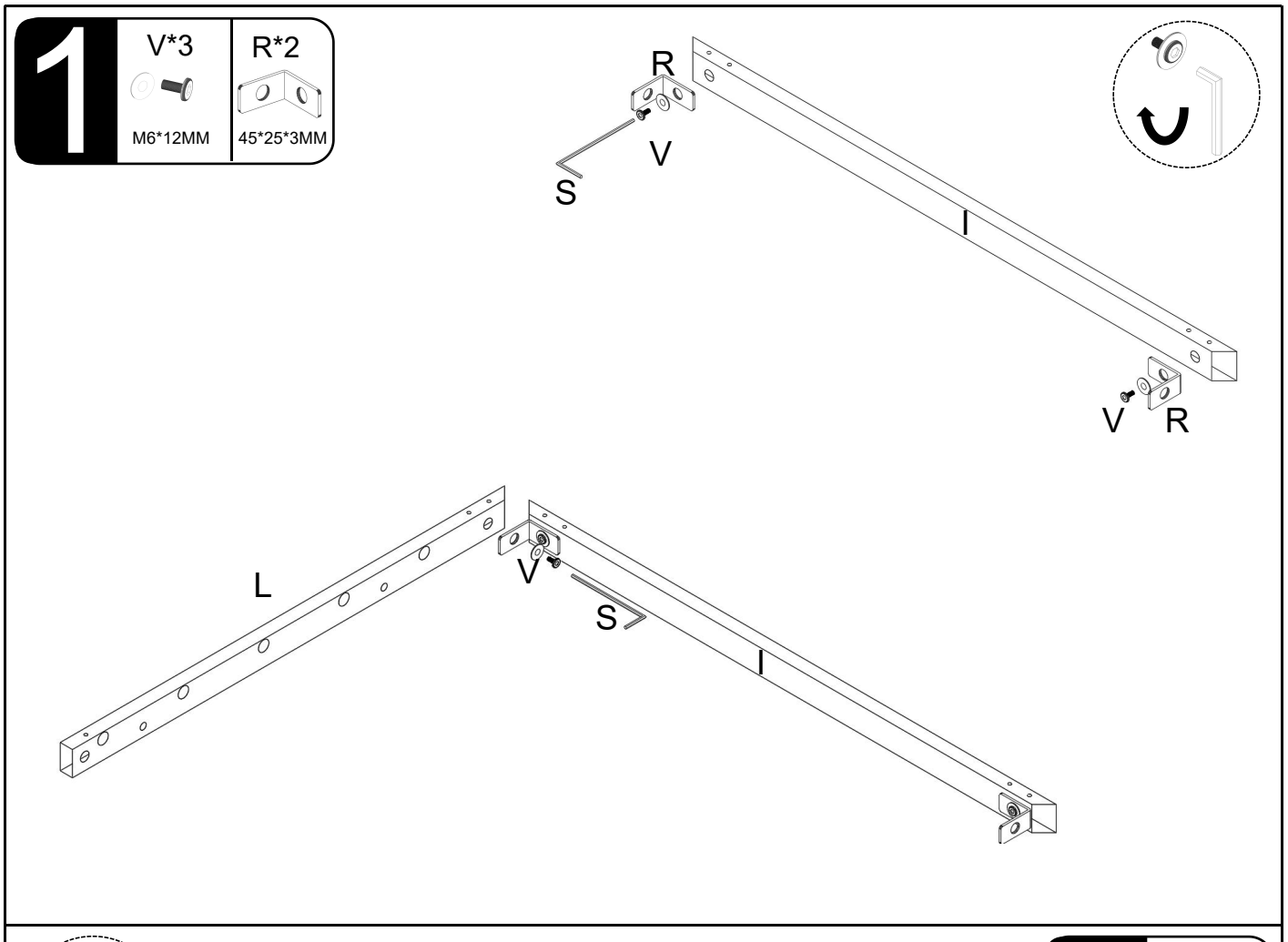
1
V*3
M6*12MM
R*2
45*25*3MM
R
V
S
l
V
R
L
V
S
l

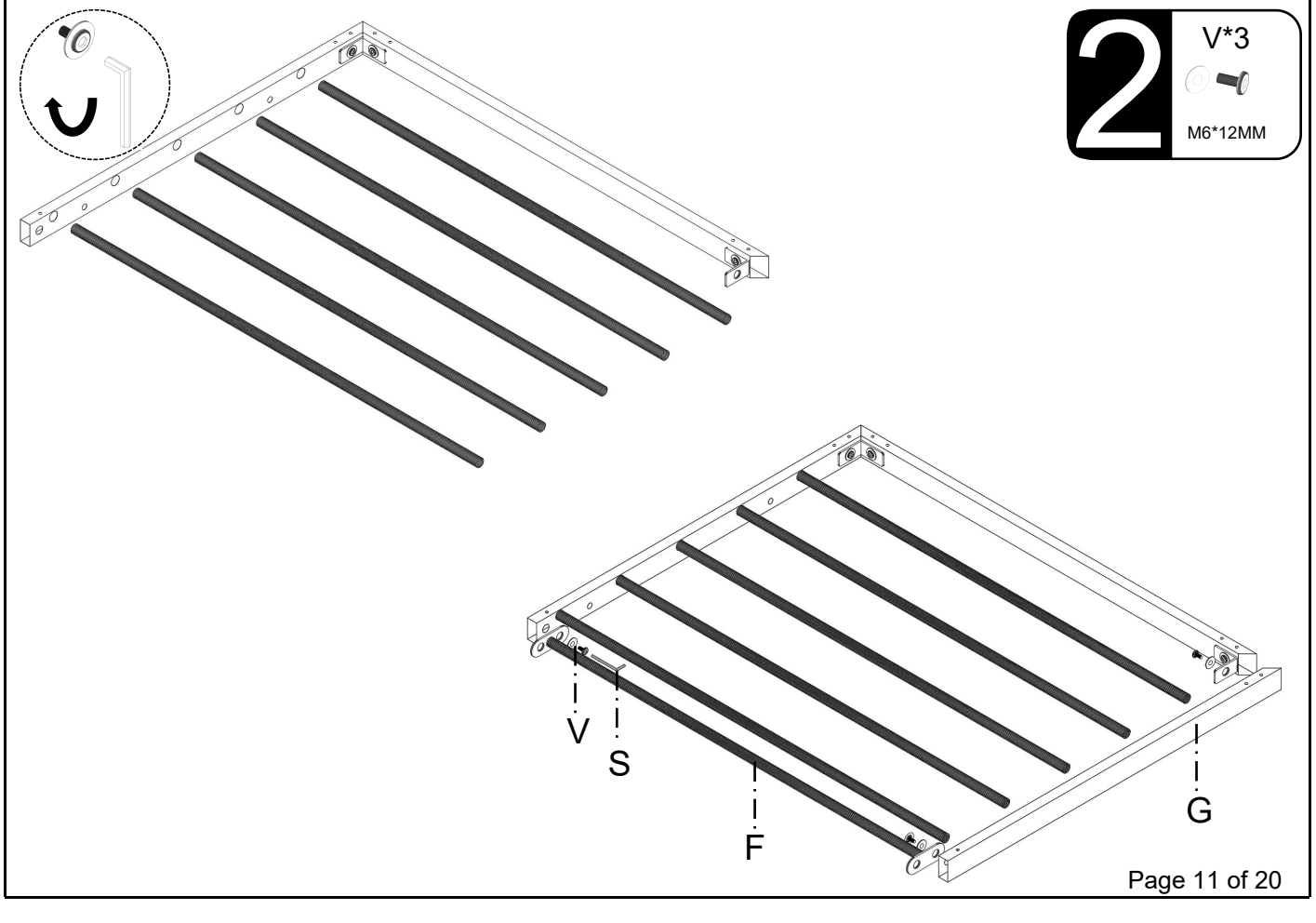
2
V*3
M6*12MM
V
S
F
G

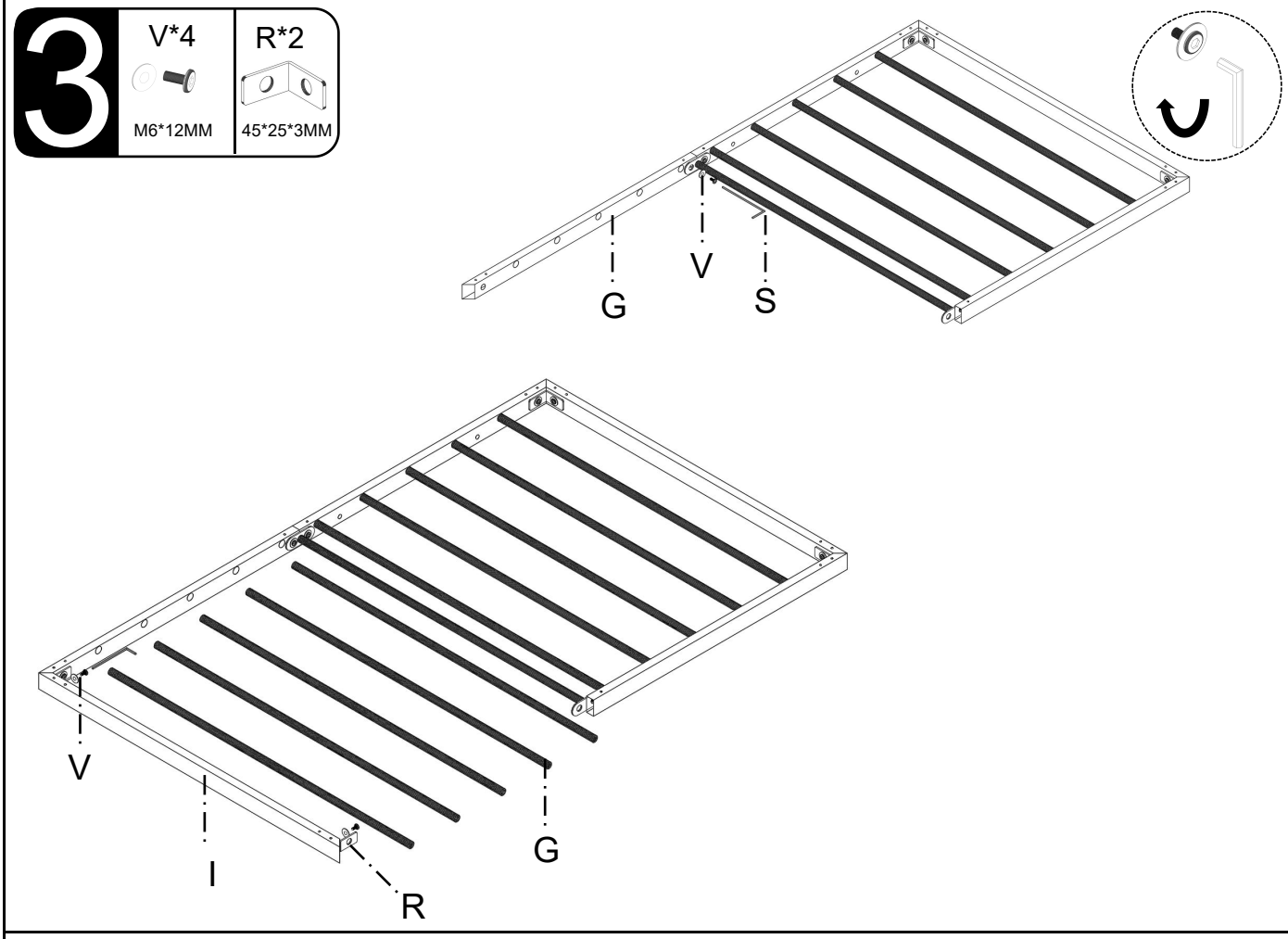
3
V*4
M6*12MM
R*2
45*25*3MM
G
V
S
V
I
R
G

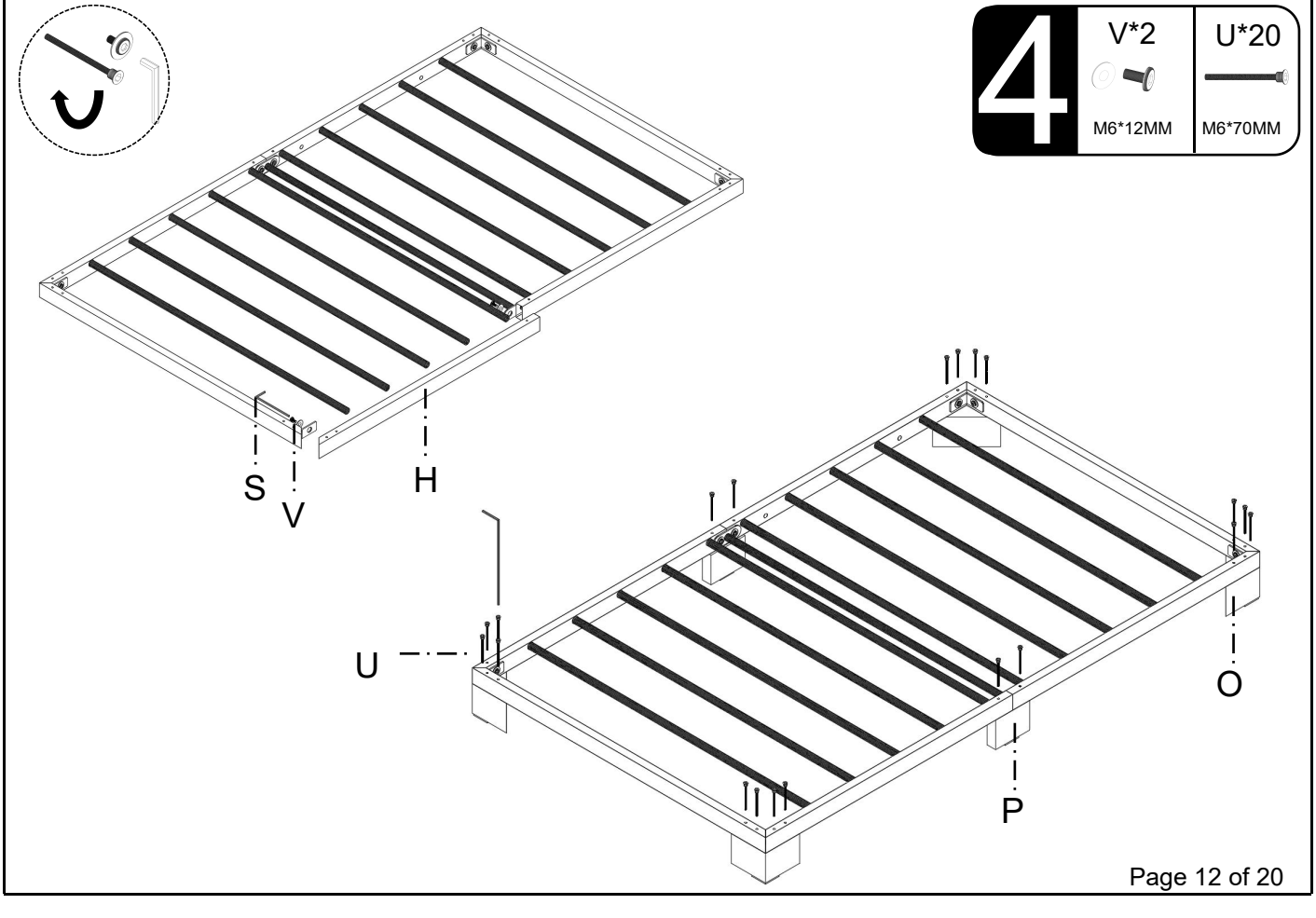
4
V*2
M6*12MM
U*20
M6*70MM
S
V
H
U
O
P

5

V*3



M6*12MM

R*2

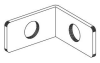

45*25*3MM

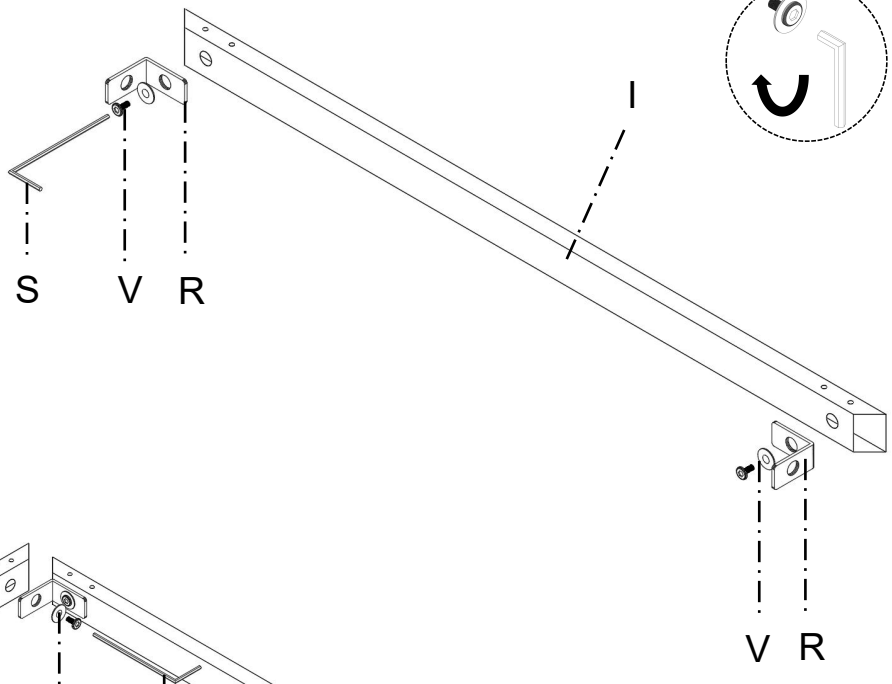

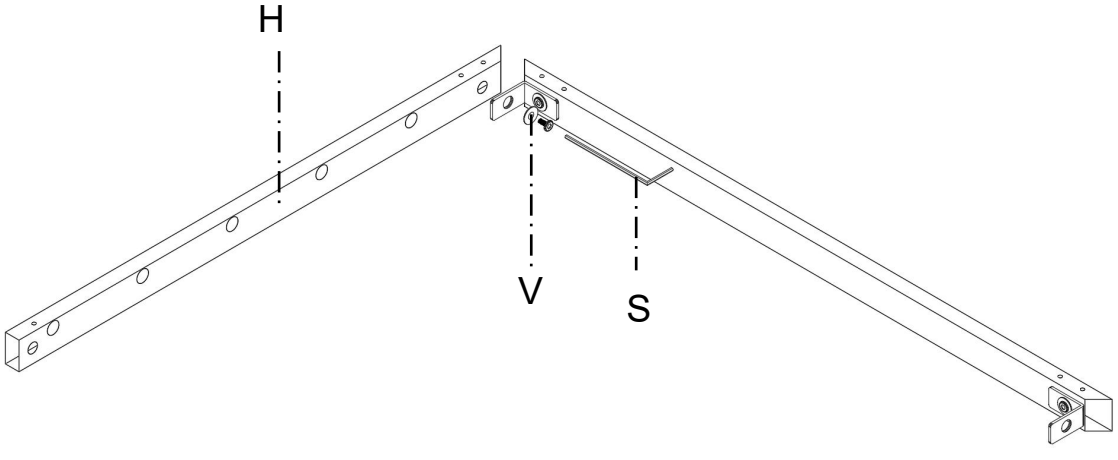

6

V*3

M6*12MM

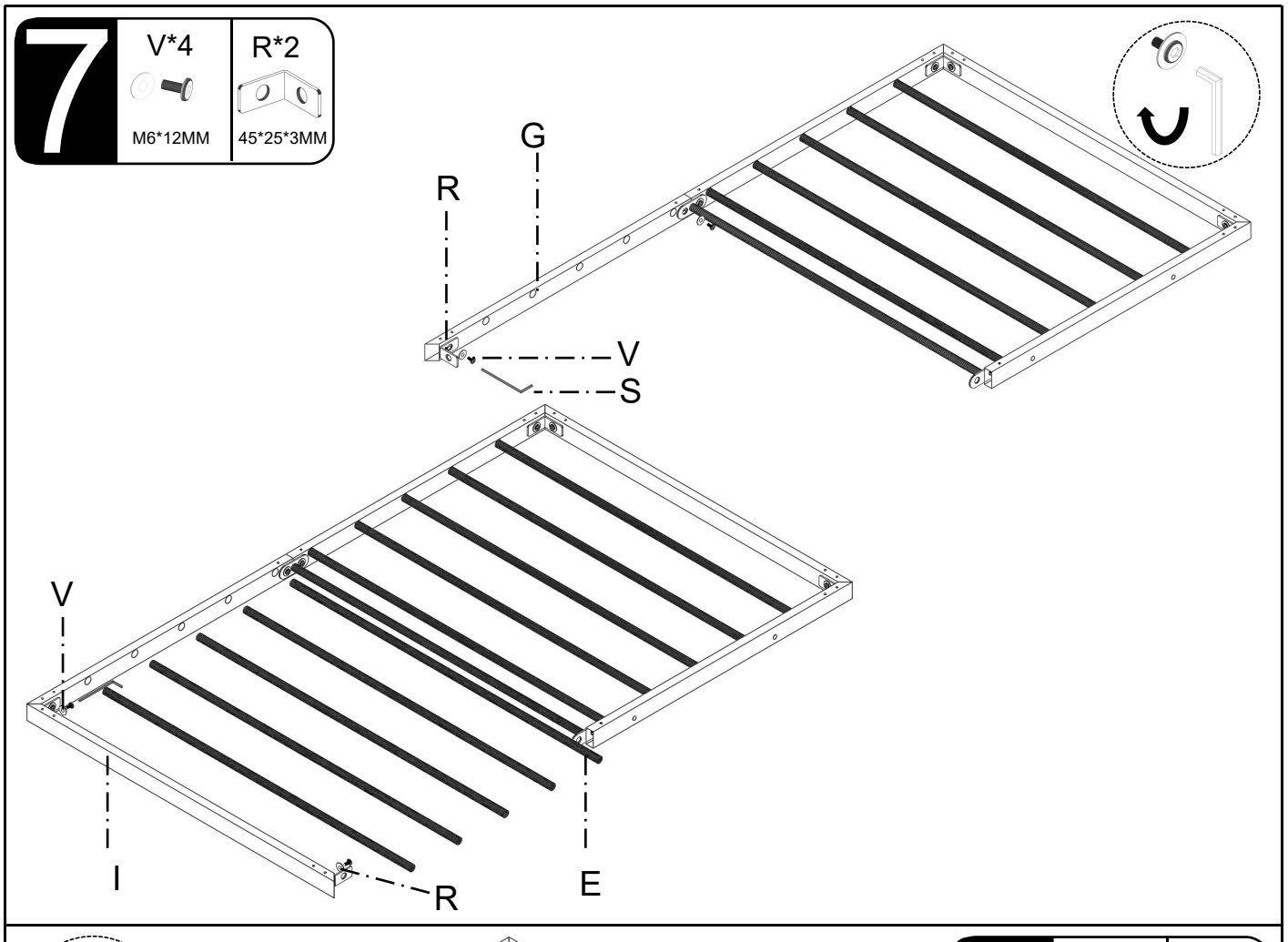
7
V*4
M6*12MM
R*2
45*25*3MM
G
R
V
S
V
I
R
E

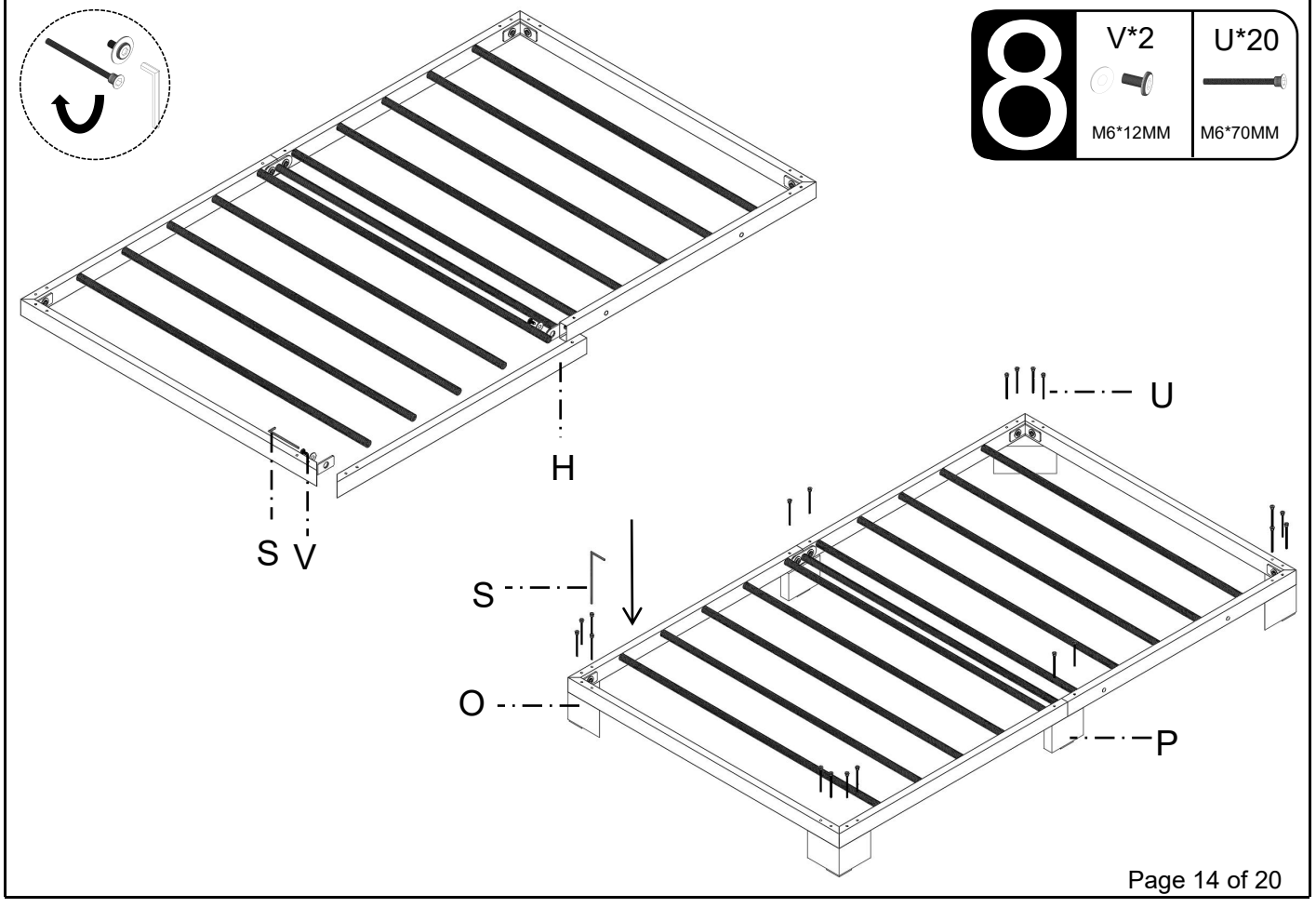
8
V*2
M6*12MM
U*20
M6*70MM
H
S
V
U
S
O
P

9

V*3

M6*12MM

R*2

45*25*3MM

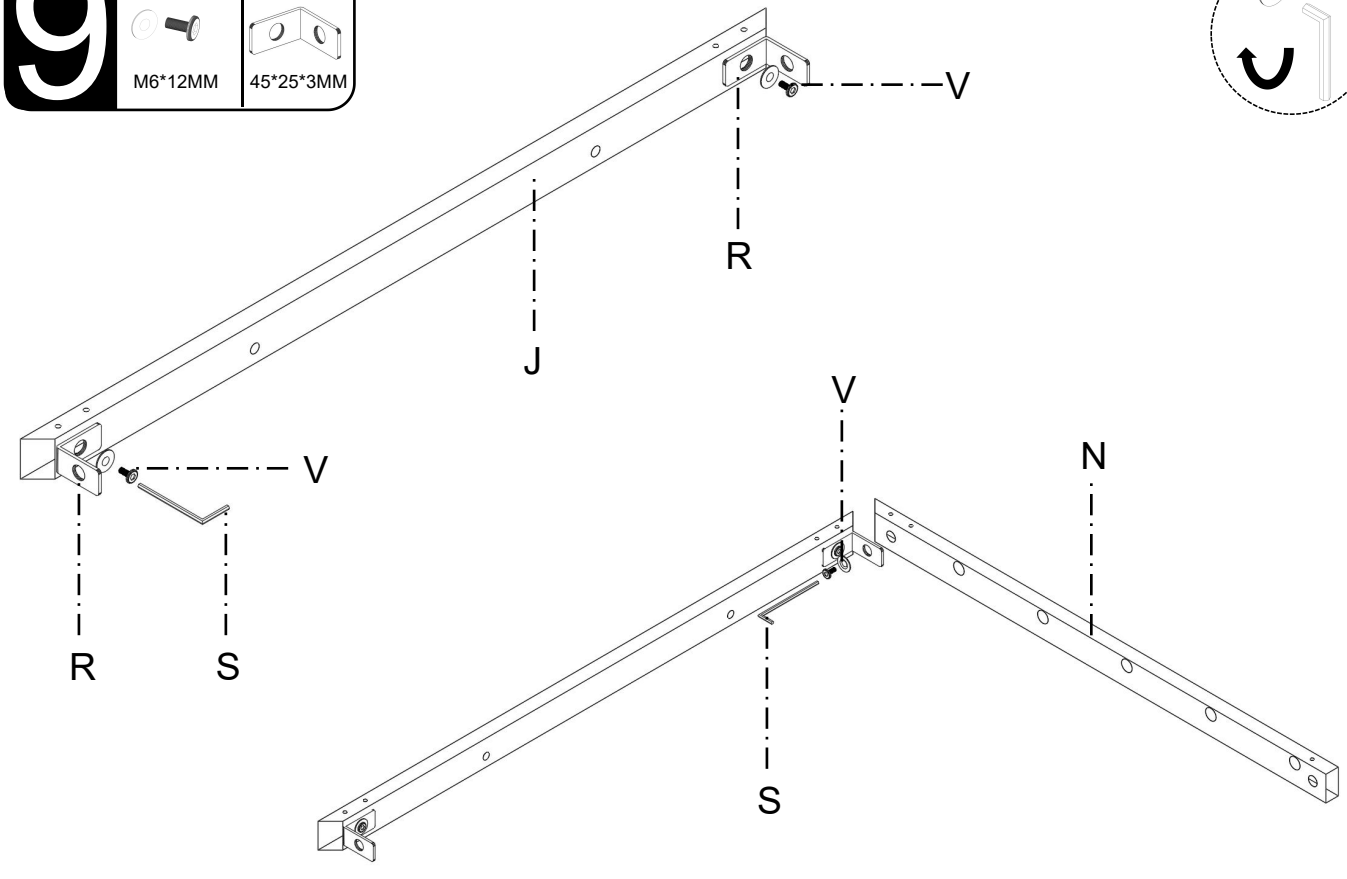

10

V*3

M6*12MM

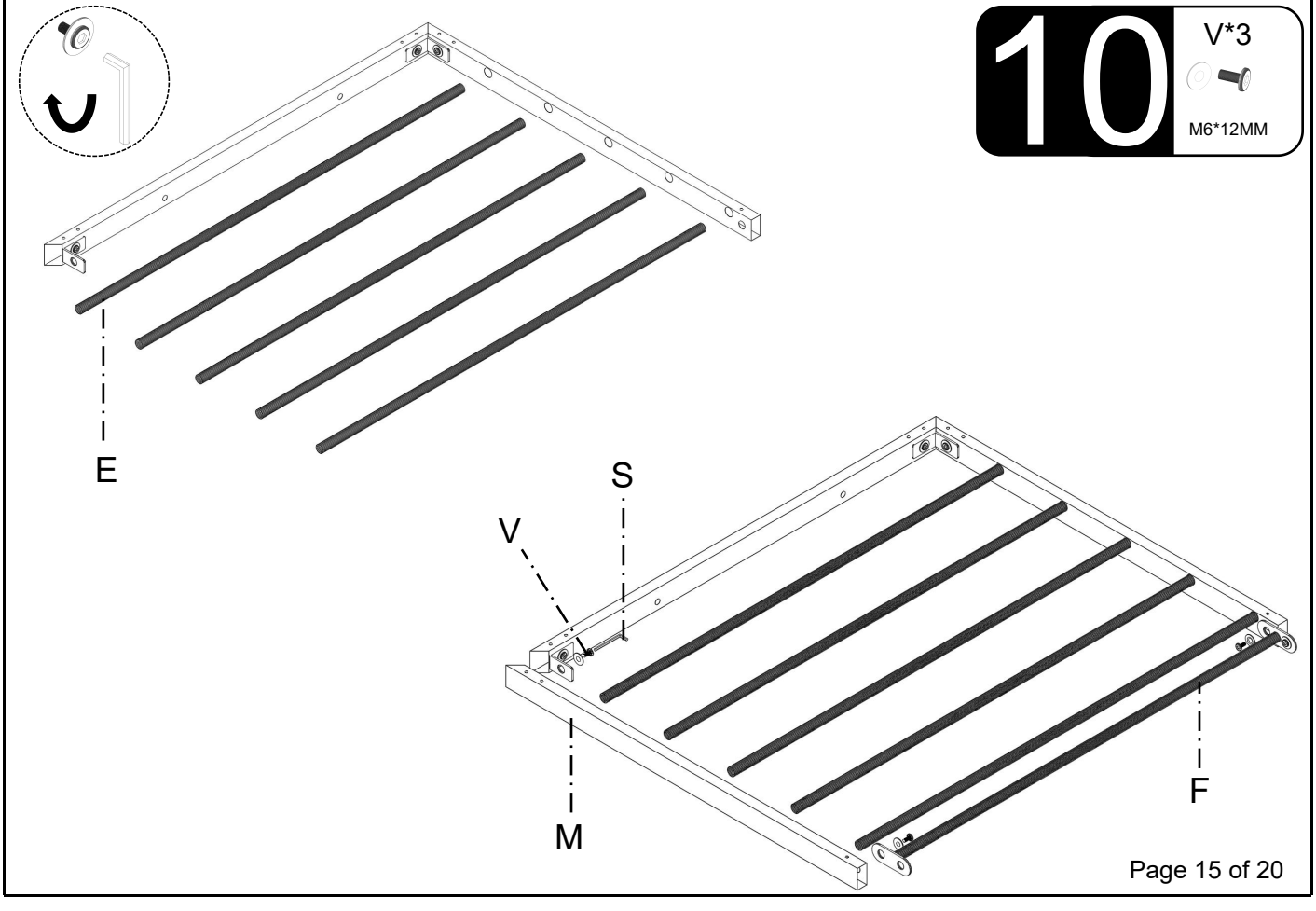

11

V*4



M6*12MM

R*2

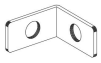

45*25*3MM

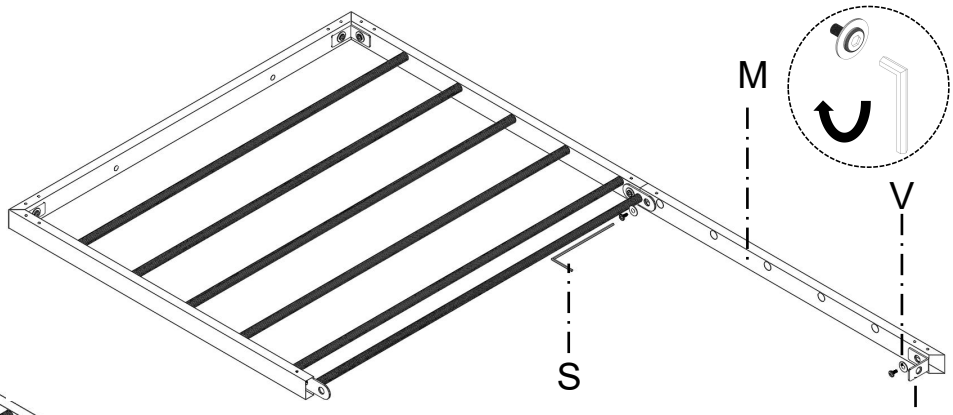

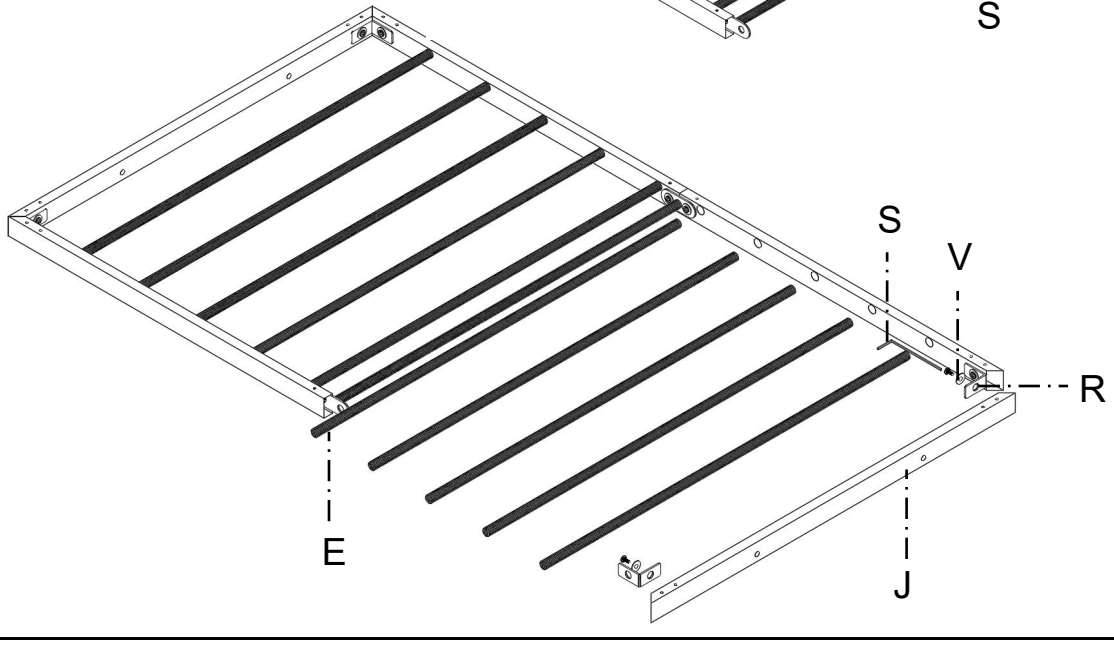

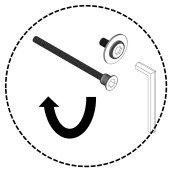

12

V*2



M6*12MM

U*20



M6*70MM

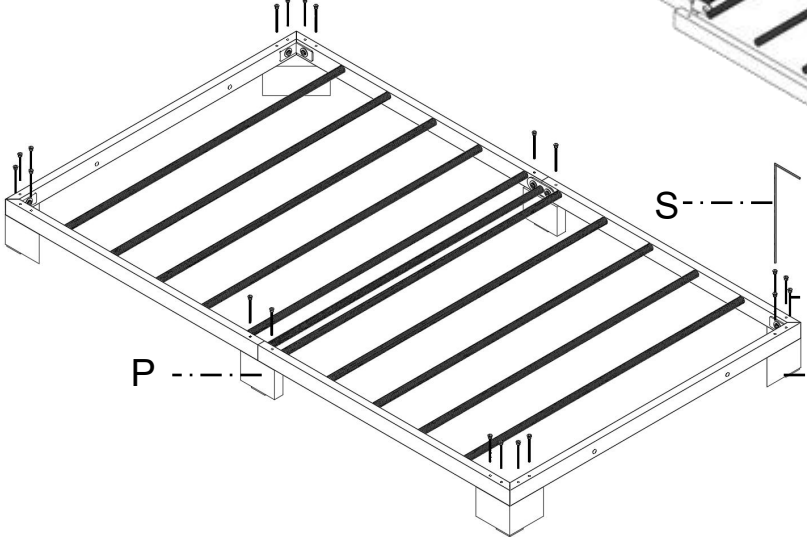

13

Q*4



M6*70mm

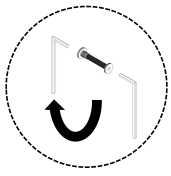

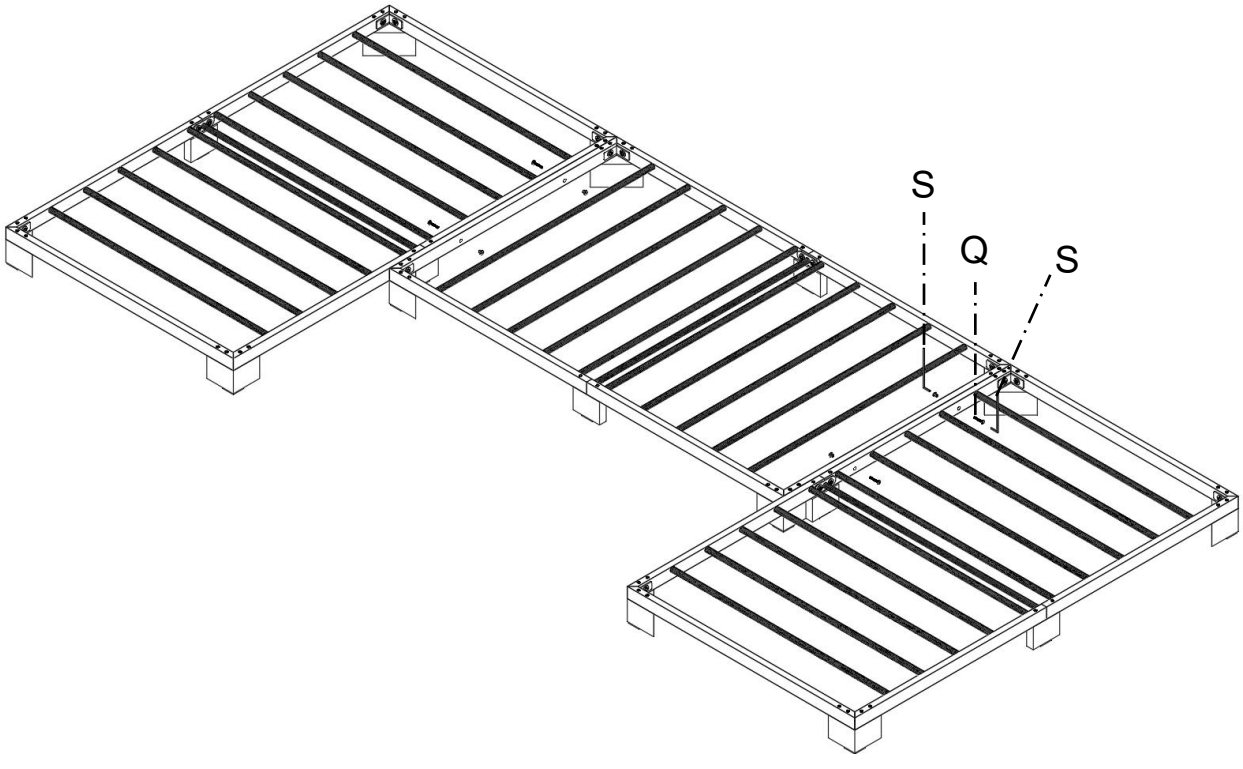

14

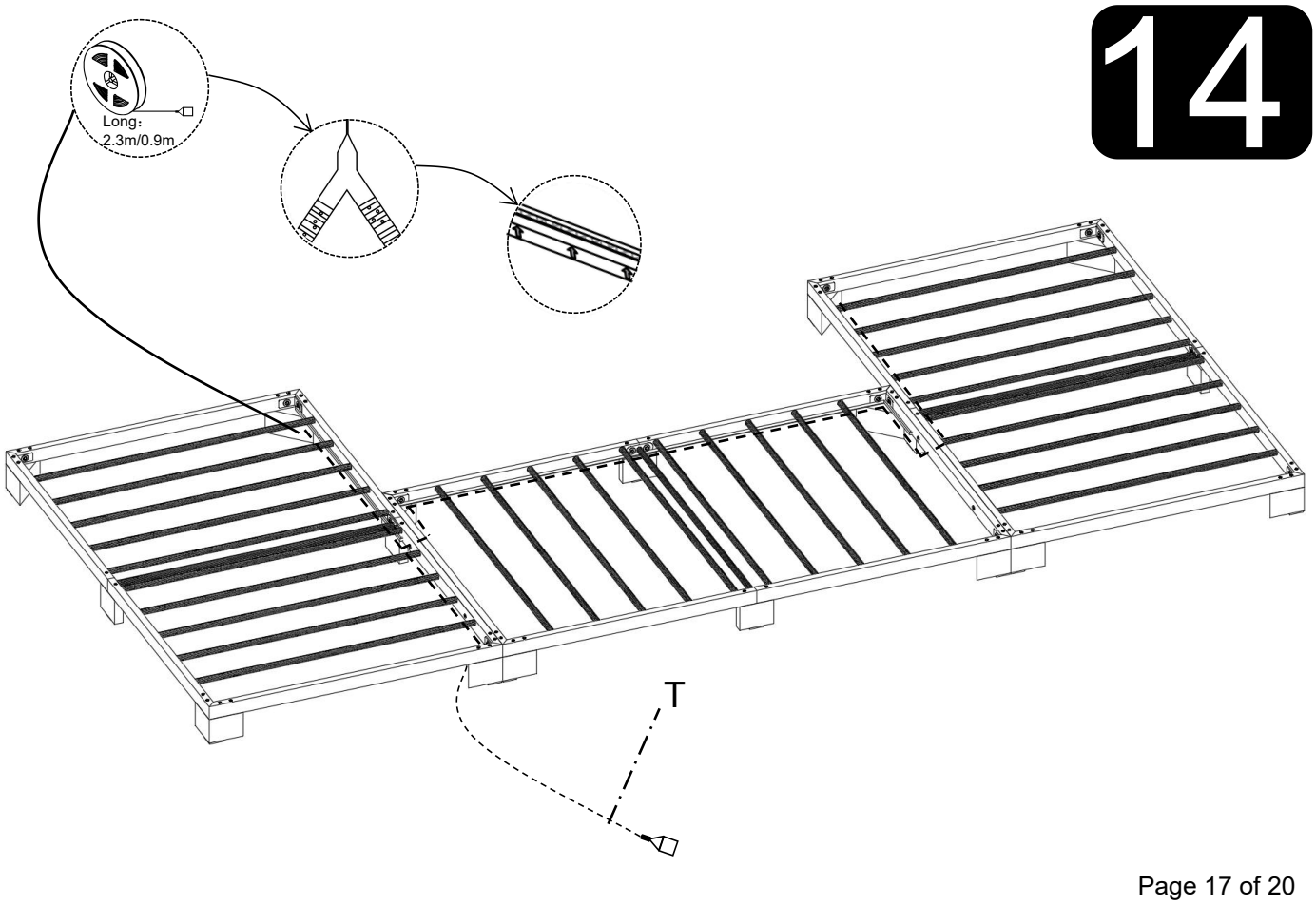

15

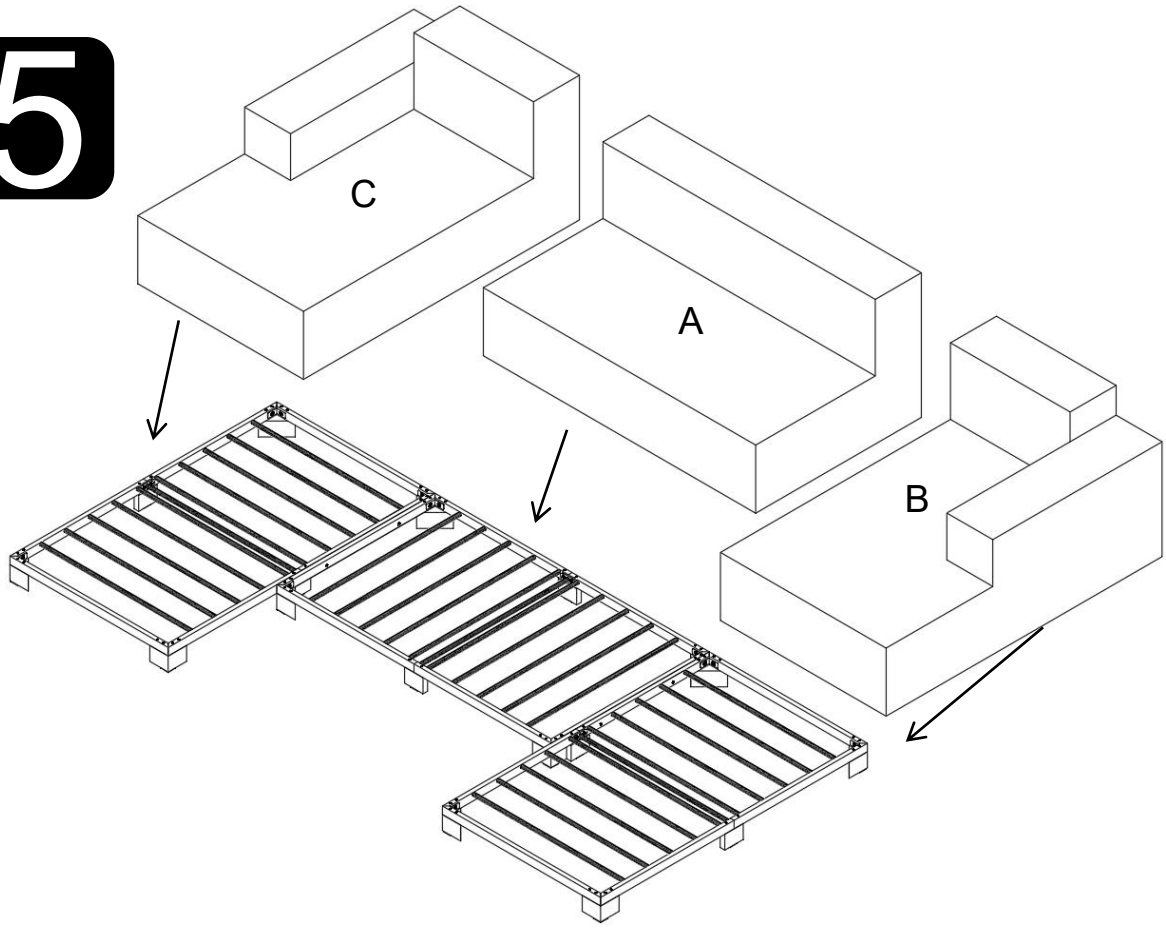

Helpful Hints

·Move your new furniture carefully, with two people lifting and carrying the unit to its new location.
·Your furniture can be disassembled and reassembled to move.
·Clean the product with a soft damp cloth. DO NOT use harsh chemicals or abrasive cleaners.

COMPLETED

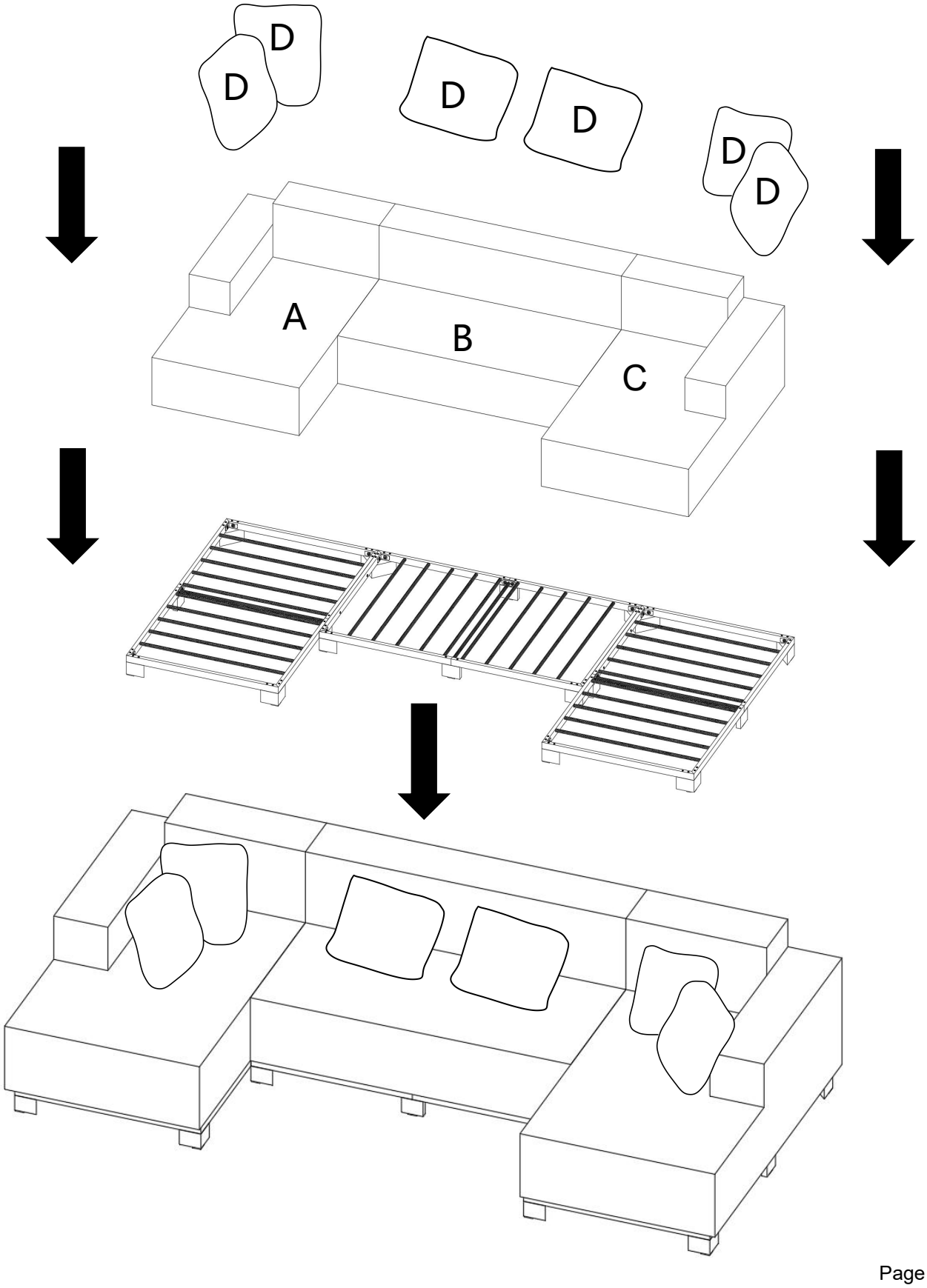

Certificate – Сертификат – 證明書 – Certificat – 증명서 – شهادة

Shenzhen ZKT Technology Co., Ltd.
1/F, No. 101, Building B, No. 6, Tangwei Community Industrial Avenue,
Fuhai Street, Bao'an District, Shenzhen, China

SUPPLIER'S DECLARATION OF CONFORMITY

Certificate Number: ZKT-250306L3767C

Certificate's Holder	:	Xingning Lo Chen Photoelectric Co. , Ltd. 602,6f, Zhenhua cultural and sports centre, the new China National Highway 205 of E San Tsuen, No. 2 Xingtian Road, Xingning
Manufacturer	:	Xingning Lo Chen Photoelectric Co. , Ltd. 602,6f, Zhenhua cultural and sports centre, the new China National Highway 205 of E San Tsuen, No. 2 Xingtian Road, Xingning
Trade Mark	:	/
Product	:	Led Strip Light
Model(s)	:	LC-5050, LC-2835, LC-3528, LC-3014, LC-5730, LC-5630, LC-7020, LC-3535
Test Standard	:	47CFR Part 15 Subpart B ANSI C63.4:2014

This Supplier's Declaration of Conformity issued on a voluntary basis for electrical equipment below the voltage limits of FCC standard. The essential requirement are fulfilled accordingly based on the technical specifications applicable at the time of issuance. See also notes overleaf. It is only valid in connection with the test report number: ZKT-250306L3767E.

Approved
Manager
Mar 4, 2025

This Certificate of Conformity is based on single evaluation of the submitted sample(s) of the above mentioned product. It does not imply an assessment of the whole product and relevant . Directives to be observed.

☎ +86-400 000 9970 +86-755-22336688 zkt@zkt-lab.com www.zkt-lab.com