Instructions

Your Home Decorating Innovator!

Size:Full / Queen / King

5-Year Limited Warranty

Contact us via email if you have any issue.

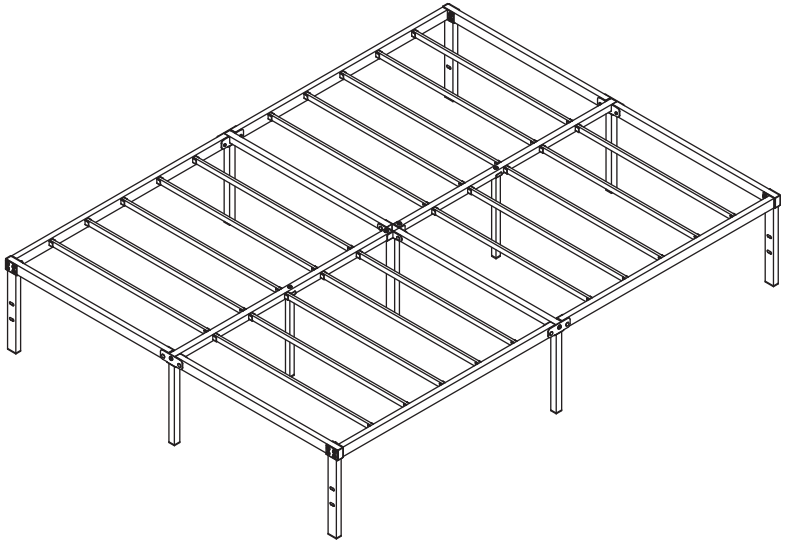

Please read this instruction manual carefully before attempting to assemble.

Return Policy ➤

We believes you will absolutely love your new foundation, but if for some reason you want to return the foundation, please contact us directly before you decide to return your product to the retailer. Our Customer Service organization can answer most concerns and can assist you with any questions you may have about your new foundation. Please contact us through email . The item must be returned within 30 days of delivery for a full refund. The item must be returned in good condition, in original box, with all original proof of purchase, parts and accessories.

5-Year Limited Warranty Statement For Manufacturing Defects

1. Please be sure to register your product at custom service to receive up to date warranty and product information.

2. Your new foundation comes with 5-year warranty against manufacturing defects. The warranty starts on the date of purchase. No warranty will be honored without an original sales receipt. The warranty and financial responsibility of the manufacturer only applies to the foundation itself and does not extend to any mattress that is put on the foundation.

3. Manufacturing defects include circumstances where the foundation has broken under normal use and no longer provides proper support for your mattress. Proper support is defined as a smooth, flat, rigid surface. In the event you encounter a manufacturing defect, please stop using this product immediately and call customer service.
Please note that it is not uncommon for some of the short metal welds to become loose in transit or during normal use. A manufacturing defect for these welds is considered to be 5 or more at the time of purchase. The manufacturer cannot be responsible for improper assembly by the consumer.

4. This warranty applies only when the foundation has been properly used by consumers who purchased the foundation from authorized dealers as a new product. Proper use means using the foundation on a level surface where all legs touch the floor with a equal distribution of weight. Proper use also means that the foundation was not abused by the consumer, as defined by the manufacturer. This warranty does not constitute agreement to replace other parts.

5. If the foundation fails due to manufacturing defects, the manufacturer will repair or replace at its discretion and reserves the right to substitute comparable materials or models and does not guarantee that the replacement part will match the existing piece or foundation.

6. In the event the foundation needs to be inspected by the manufacturer to determine a warranty claim, the transportation cost or removal cost is borne by the consumer.

Explosion Diagram ➤

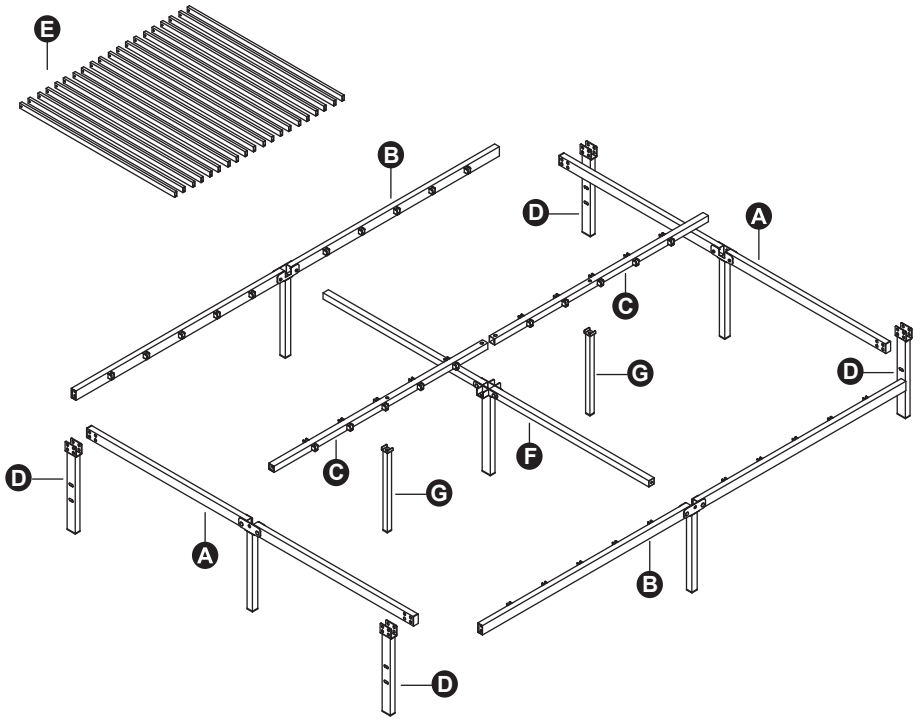

Components ➤

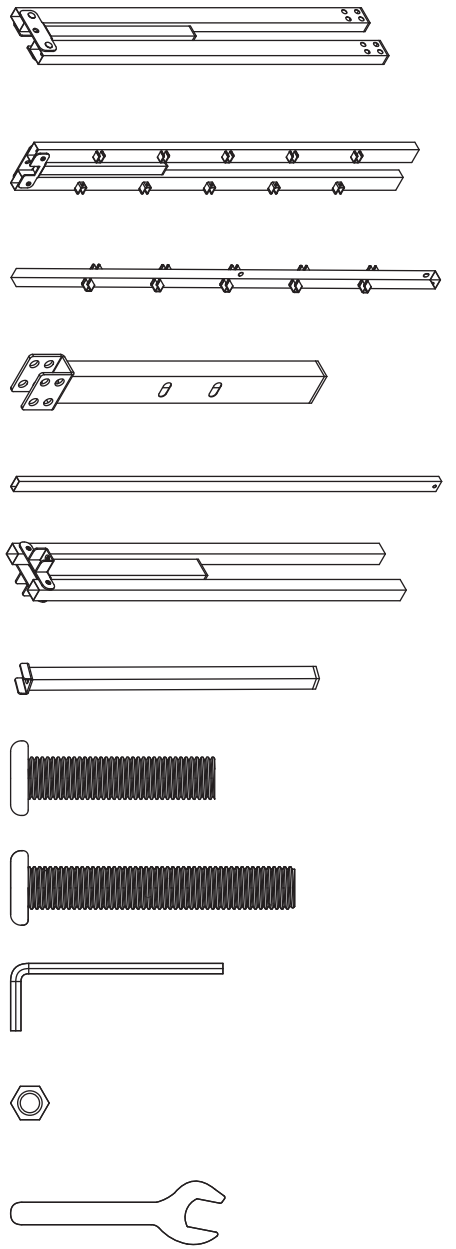

Ⓐ ×2pcs

Ⓑ ×2pcs

Ⓒ ×2pcs

Ⓓ ×4pcs

Ⓔ ×20pcs

Ⓕ ×1pc

Ⓖ ×2pcs

① ×16pcs

② ×8pcs

③ ×2pcs

④ ×8pcs

⑤ ×1pcs

1

A×2pcs

B×2pcs

F×1pc

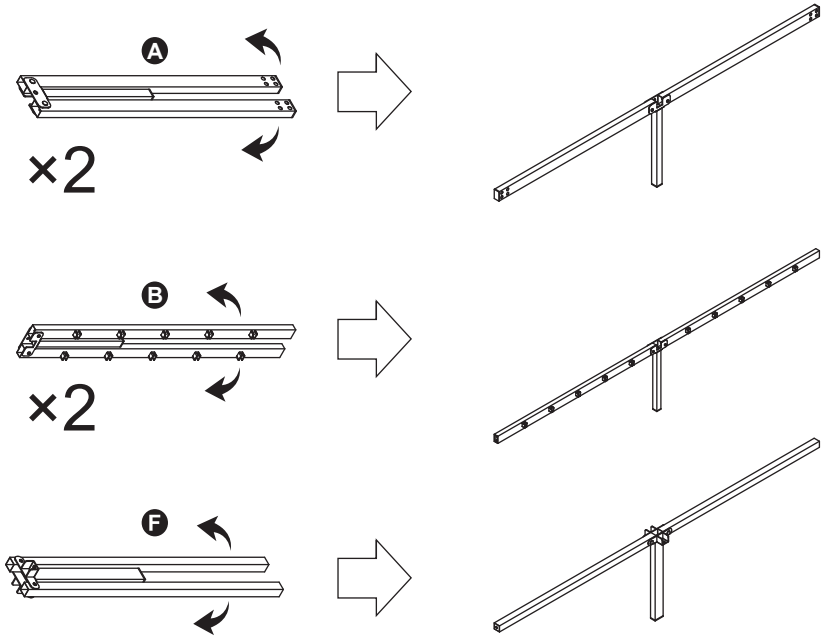

3

B×2pcs

② ×8pcs

③ ×1pc

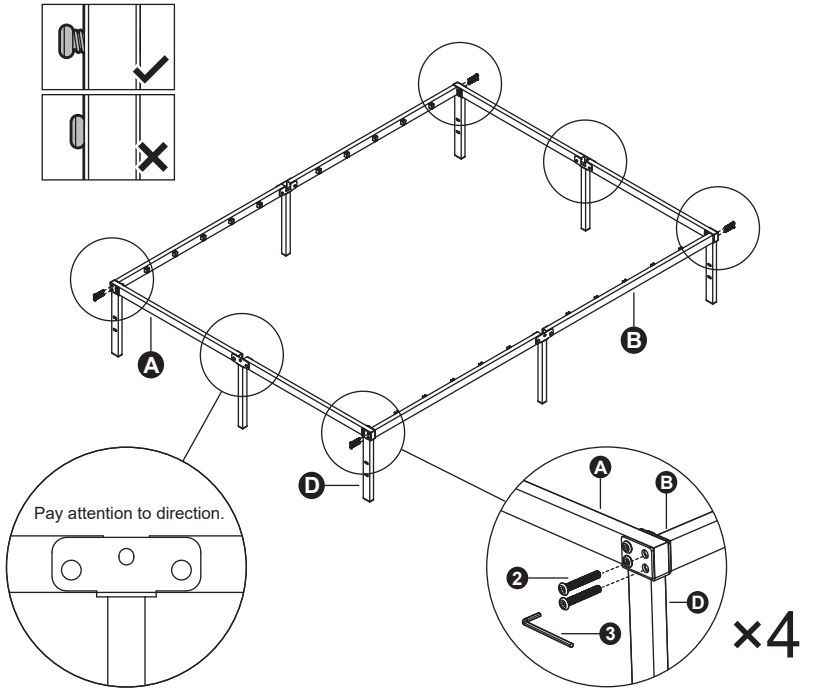

2

A×2pcs

D×4pcs

① ×8pcs

③ ×1pc

④ ×8pcs

⑤ ×1pc

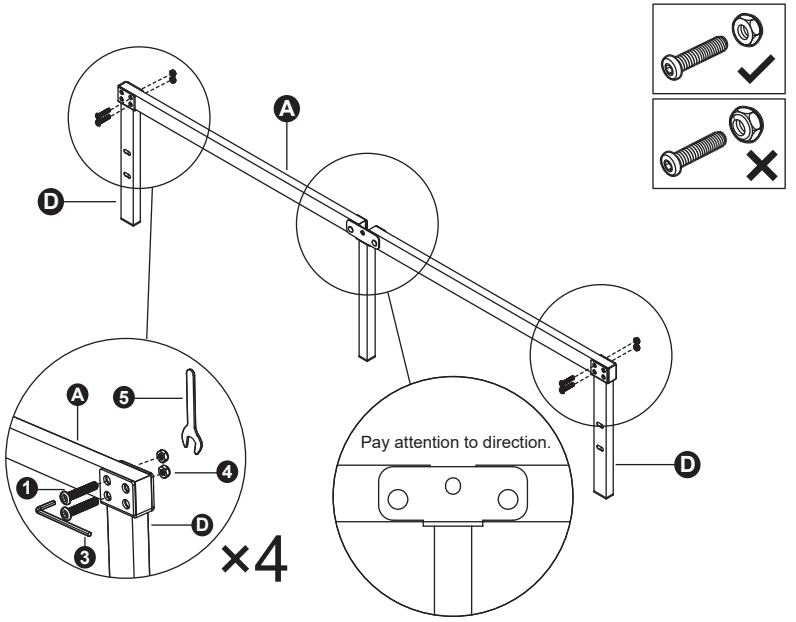

5

4

F×1pc

① ×2pcs

③ ×1pc

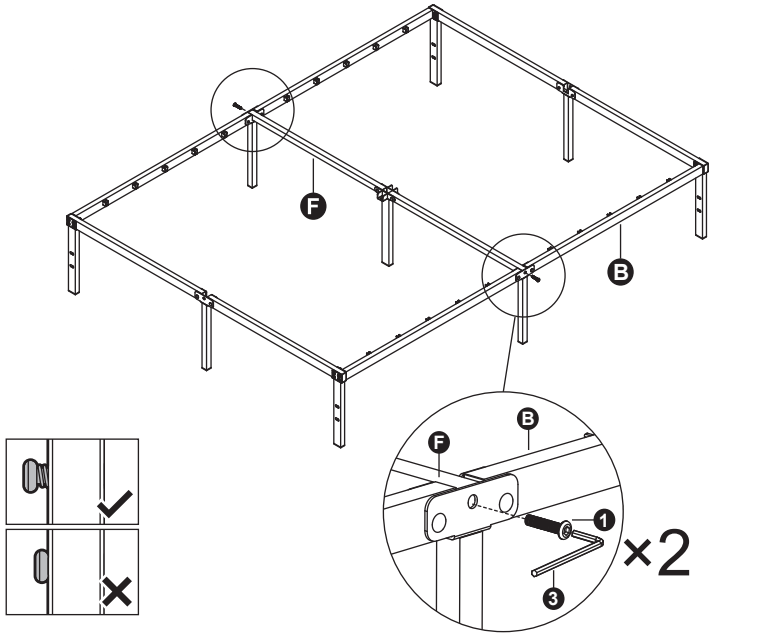

6

5

C×2pcs

① ×4pcs

③ ×1pc

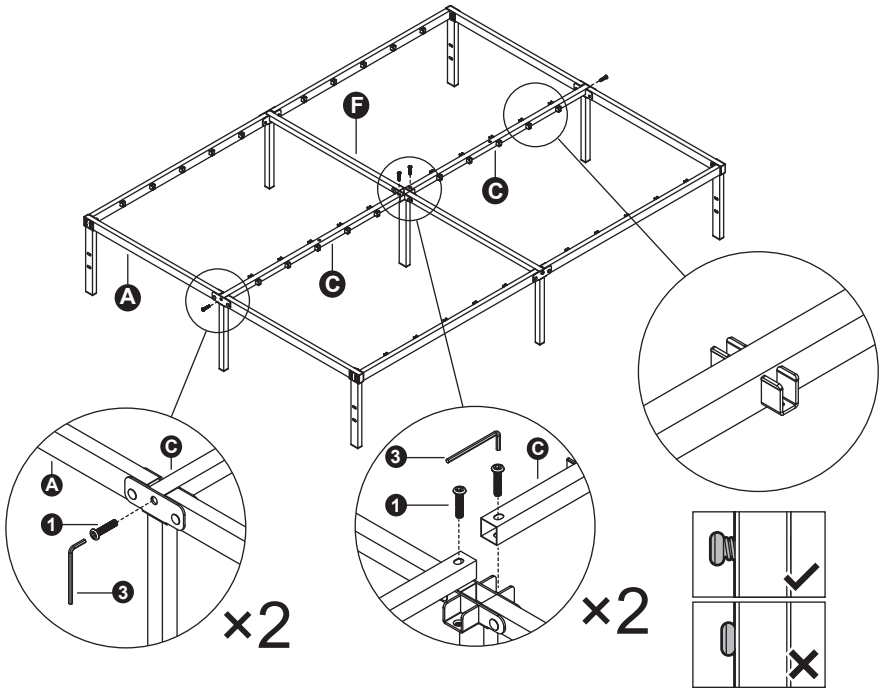

7

E×20pcs

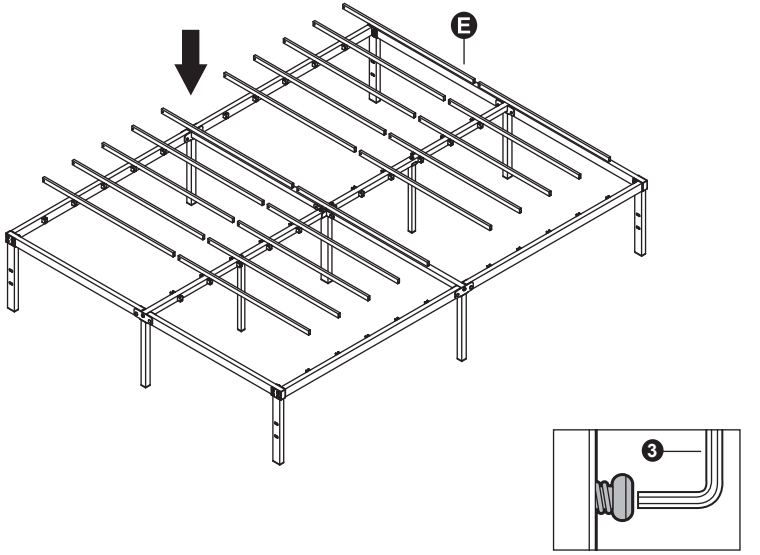

If the bed slats do not fit, try loosening the screws.

6

G×2pcs

① ×2pcs

③ ×1pc

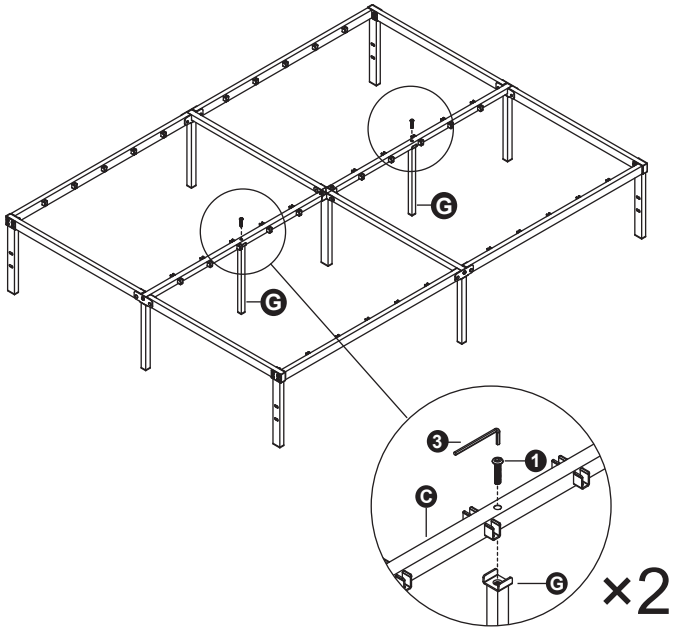

8

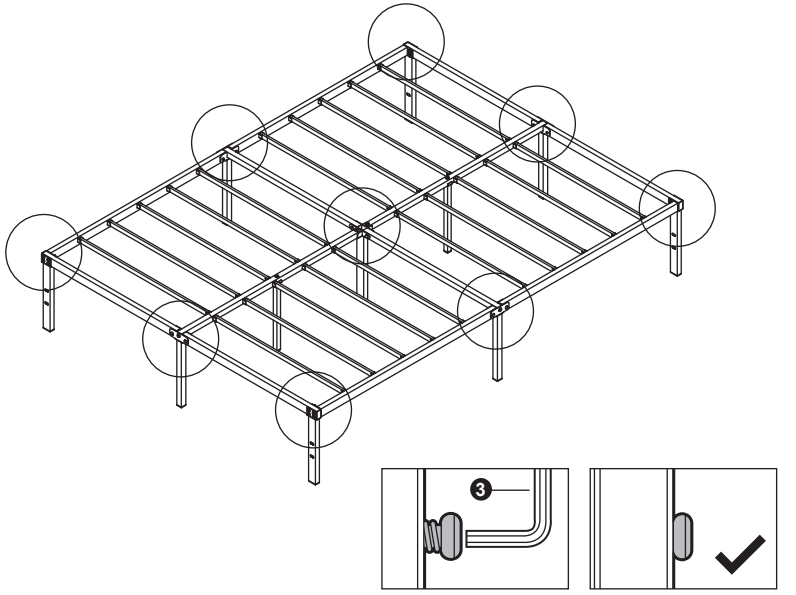

Then properly tighten all screws.