Stylor Rocking Chair

Assembly Insturction

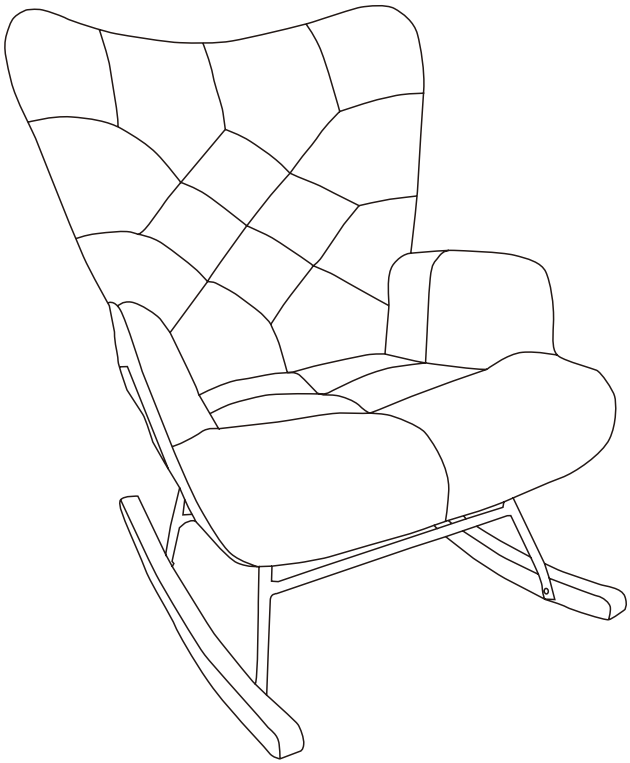

A

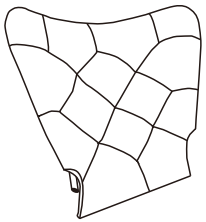

x 1

B

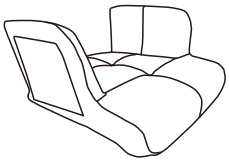

x 1

C

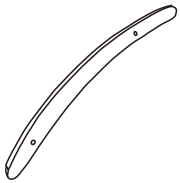

x 1

D

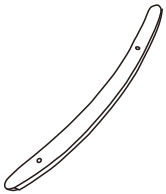

x 1

E

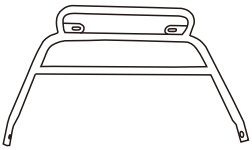

x 1

F

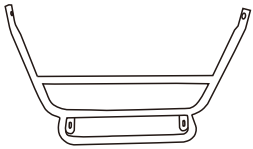

x 1

G



x 2

H

M6*20



x 8

I

M6*60



x 2

J



x 1

Attention :

1.screws should be only 50% tight.

2.after all the screws adjust the holes then tight screws 100% totally.

1

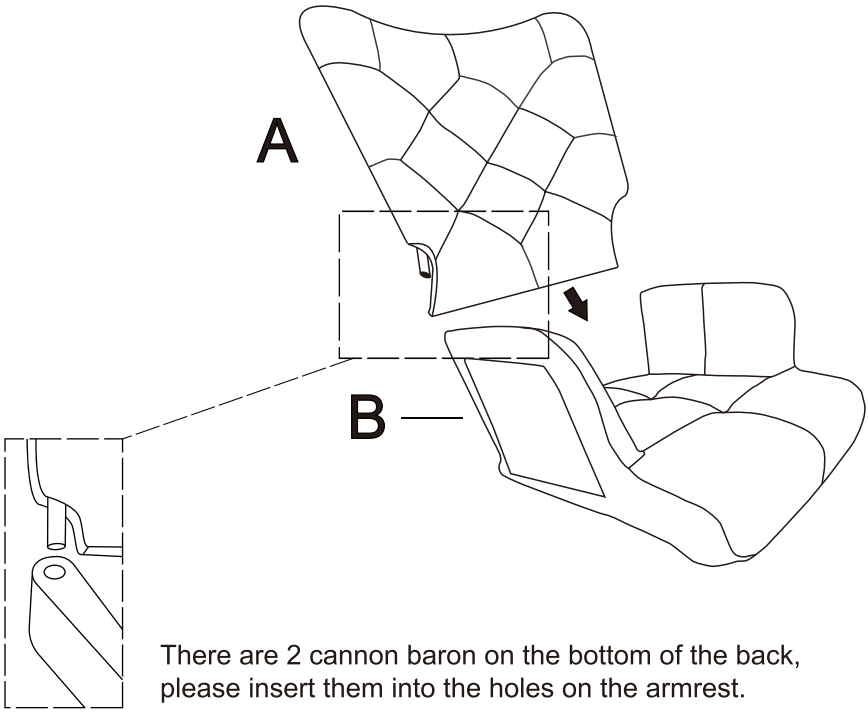

There are 2 cannon baron on the bottom of the back, please insert them into the holes on the armrest.

Attention :

1.screws should be only 50% tight.

2.after all the screws adjust the holes then tight screws 100% totally.

2

Hold the backrest and press down

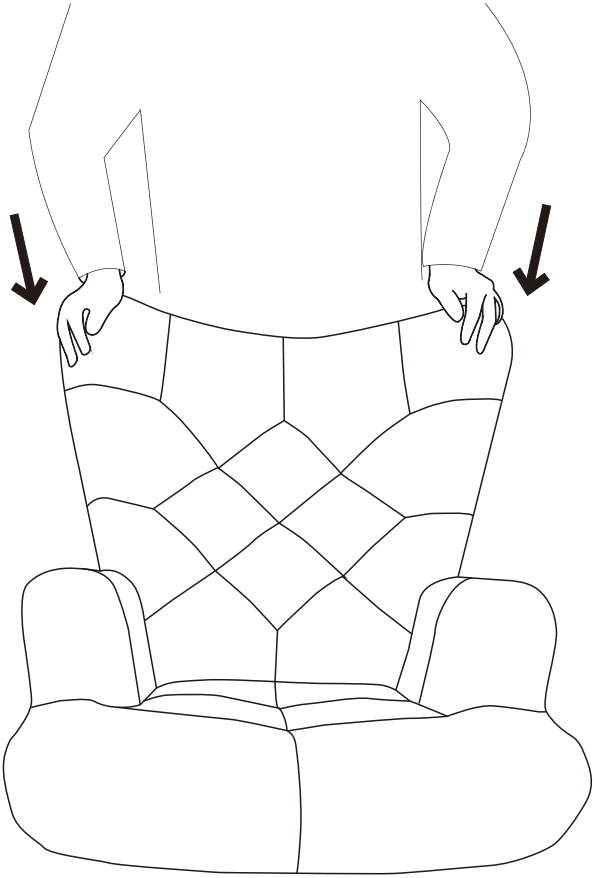

Attention :
1.screws should be only 50% tight.
2.after all the screws adjust the holes then tight screws 100% totally.

3 Make sure the back and the bottom tight fit,
then drew the screws in, then tighten.

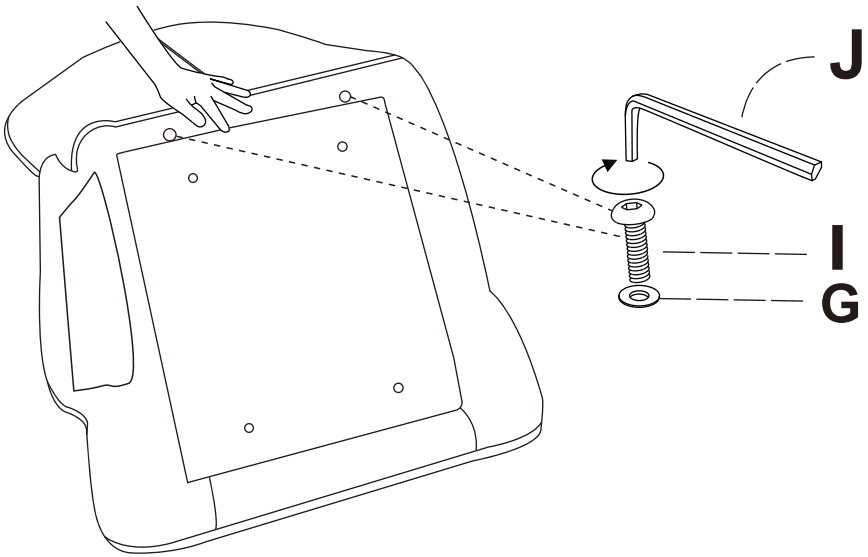

X2

G	2PCS
I	2PCS

Attention :
1.screws should be only 50% tight.
2.after all the screws adjust the holes then tight screws 100% totally.

4

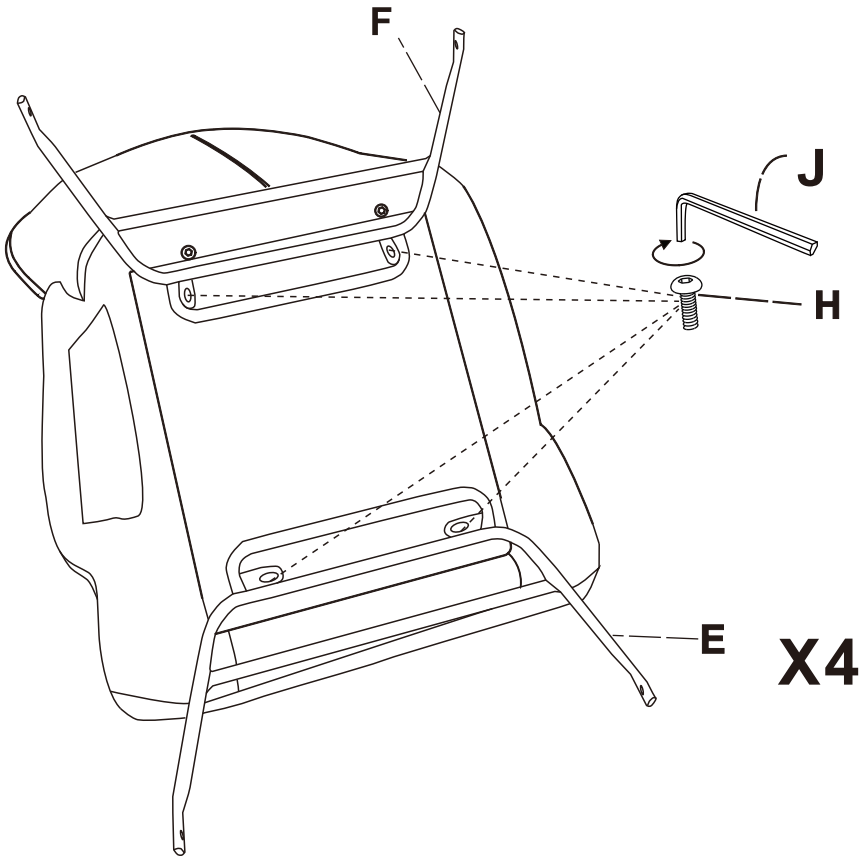

H 4 PCS

Attention :
1.screws should be only 50% tight.
2.after all the screws adjust the holes then tight screws 100% totally.

5 Make sure the longer side of C and D is facing the back of the chair.

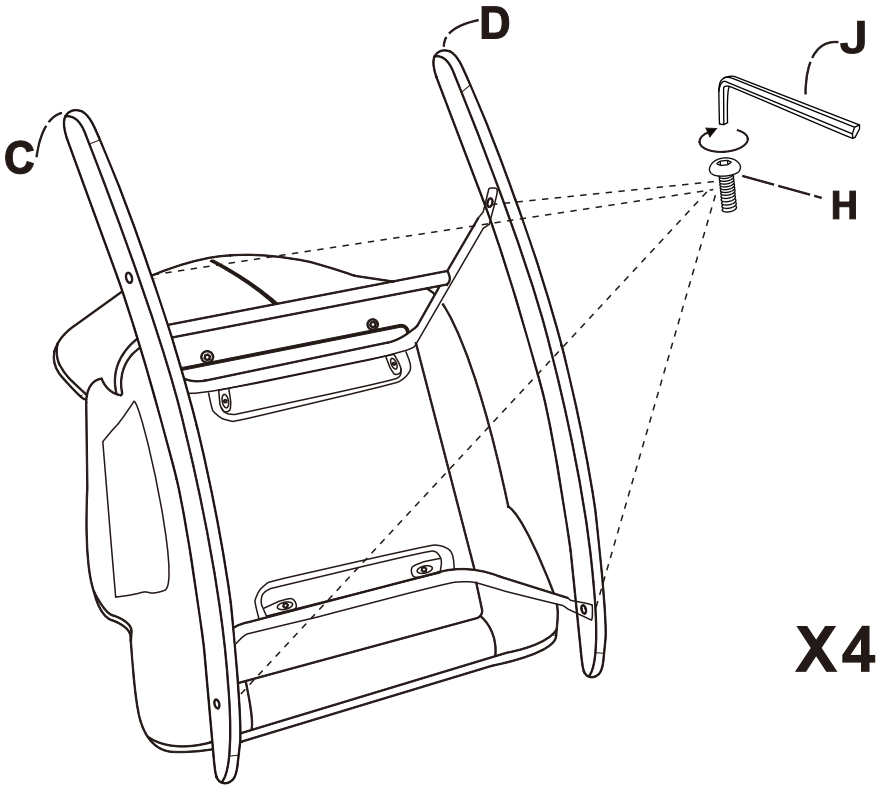

H 4PCS