# 10 x 10FT

□□□□□□□□ YYOT333GY □□□□□□□

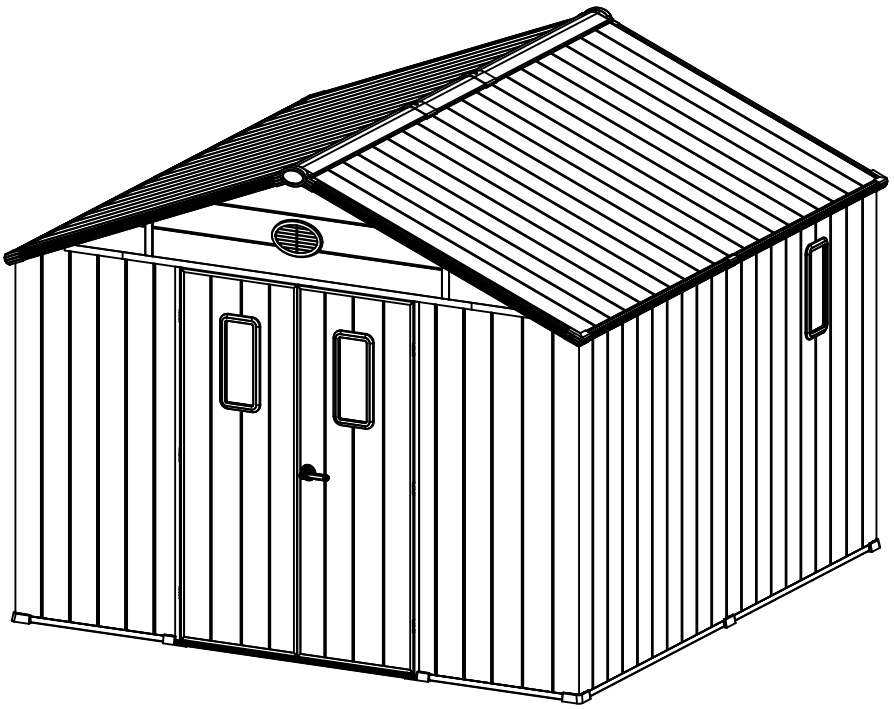

# WARNINGS & CAUTIONS

Thank you for choosing our outdoor storage shed. Please read this entire section before beginning installation. Following these guidelines will help ensure safe assembly, proper use, and long-term durability.

---

# 1. BEFORE YOU START (MOST IMPORTANT)

### 1.1 Check Local Regulations

Before installing the shed, review your local building codes and permitting requirements. Some areas require approval for outdoor structures.

### 1.2 Choose the Right Location

·Install the shed on a **level, solid surface** such as concrete or a reinforced deck.

·Do **not** install directly on soil, grass, or bare ground.

·Keep at least **6 ft.** (1.8 m) of clearance from fences, houses, garages, trees, or electrical wires.

### 1.3 Secure the Shed

For safety and wind resistance, the shed **must be anchored**.
Use the pre-marked holes on the floor and attach proper ground anchors or screws (not included).

### 1.4 Verify All Parts

Unpack and check all components before assembly.
If anything is missing or damaged, **stop installation** and contact us.

### 1.5 Two-Person Assembly Required

Due to the size and weight of the shed panels, at least two adults are needed for safe installation.

### 1.6 Wear Protective Gear

Use work gloves, safety goggles, and long sleeves while assembling or performing maintenance.

---

# 2. SAFETY GUIDELINES DURING USE

## 2.1 Wind & Weather Precautions

·This shed is tested to **Level 8 wind resistance (46 mph)** and a roof load of **800 lbs**.

·Keep the doors **closed and locked** when not in use to prevent wind-related damage.

·During snowy conditions, clear the roof regularly. Use a **plastic snow rake** to avoid scratching the surface.

## 2.2 Child & Pet Safety

·Keep children and pets away from the work area during assembly.

·Do not leave children unsupervised inside or around the shed.

**·Never stand or allow anyone to stand on the roof.**

## 2.3 Weight Limits

Hooks installed along the roof frame must not exceed a maximum load of **30 lbs**.

## 2.4 Safe Cleaning

·Clean with a garden hose or mild detergent.

·Do not use metal brushes, degreasers, or cleaners containing oil or acetone, as they may damage the material.

## 2.5 Storage Restrictions

Do not store:

·Recently used grills, torches, or any hot items

·Highly volatile or flammable chemicals

### 2.6 Avoid Mechanical Damage

Keep lawnmowers, trimmers, and other high-speed yard tools away from the shed to prevent impact damage.

### 2.7 Consider Wind Direction

When choosing a location, reduce exposure to strong prevailing winds—especially on the **door side**.

---

# 3. WARRANTY INFORMATION

### Limited Warranty

This product includes a **3-month limited warranty**, valid only for the original purchaser and for personal, residential use.
The warranty covers defects in materials or workmanship under normal use.

### Lost Parts Policy

Missing parts reported within **90 days** of purchase will be replaced at no cost. After 90 days, replacement parts may incur a fee.

### Modification Notice

Any modifications—such as drilling, cutting, altering components, or using non-approved hardware—may compromise structural integrity and **void all warranties**.
We cannot assume responsibility for products that have been altered.

# Site preparation

1. Leveling the ground.



2. Recommendation: Construct a wooden or concrete base as a foundation.

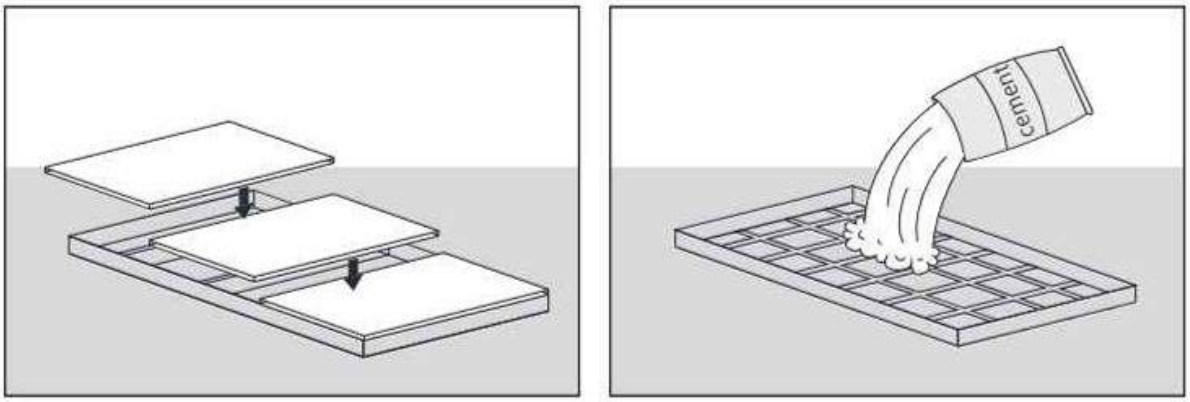


3. Parts are placed after unpacking.

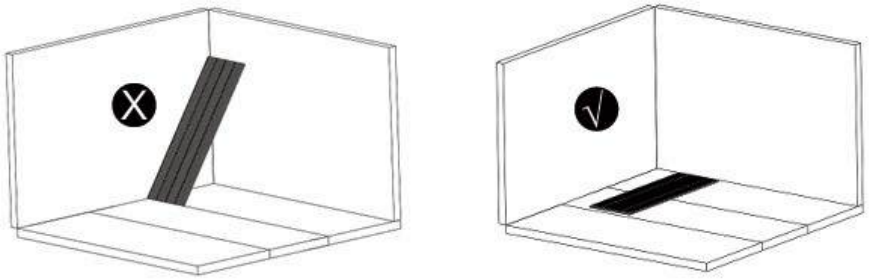

# Tools Needed (Not Included)

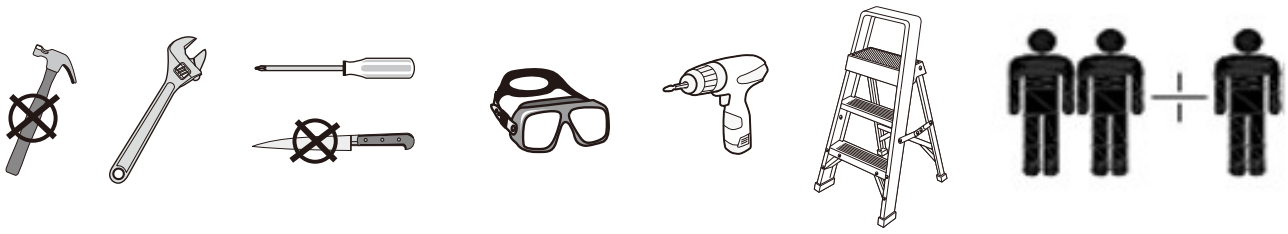

## Parts List (Box 1)

| | | | |
|---|---|---|---|
| 1850x316  Z1 **7x** | 1867x316  Z2L **1x** | 1867x316  Z2R **1x** | 1867x316  Z2A **1x** |
| 1867x316  Z2B **1x** | 1857x316  Z3 **2x** | 1857x132  Z3A **1x** | 1857x130  Z3B **1x** |
| 1834x304  Z4L **2x** | 1834x304  Z4R **2x** | 1824x316  Z5A **1x** | 1824x316  Z5B **1x** |
| 1824x316 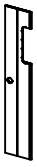 Z5C **1x** | 1824x316  Z5D **1x** | 1775x316  Z7 **2x** | 1775x316  Z8B **2x** |
| 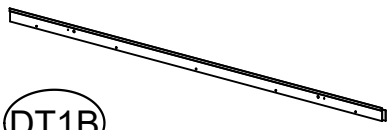 DT1B **1x** |  DR **1x** |  DL **1x** | |
|  DM **1x** |  DB1 **2x** |  DB2 **1x** | |
|  U4B **1x** |  U1 **5x** | | |
| 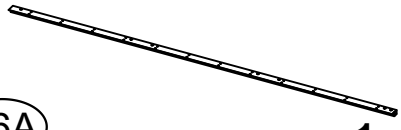 P6A **1x** | 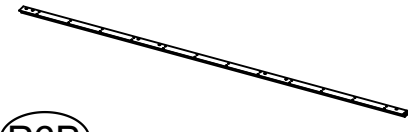 P6B **1x** | | |

## Parts List (Box 2)

| | | | |
|---|---|---|---|
| 980x603 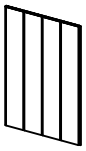 A15 **12x** | | | |

# Parts List (Box 3)

| | | | |
|---|---|---|---|
| 1775x316  Z8 **14x** | 1573x316  M3 **14x** | | |
| 1575x316 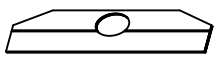 Z9A **2x** | 1008x213  Z9C **2x** |  Z9E **2x** | 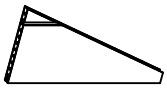 Z9F **2x** |
|  U4B **3x** | 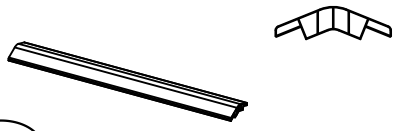 Q2 **2x** | | |
| 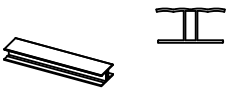 N9 **4x** |  U1B **4x** |  SFI **2x** | 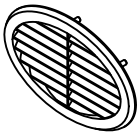 SFO **2x** |
|  SEI **1x** | 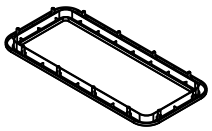 SEO **1x** | 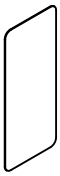 SE **4x** | |
| 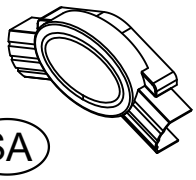 SA **2x** | 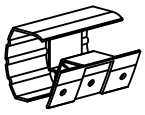 SB **2x** | 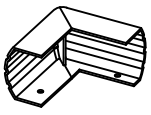 SCA **2x** | 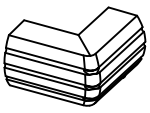 SCB **2x** |
| 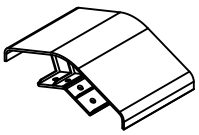 SD **2x** | 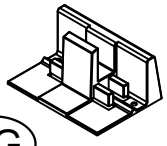 SG **3x** | 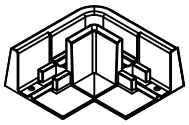 SH **4x** | 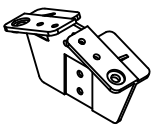 SJ **2x** |
|  SK **1x** | 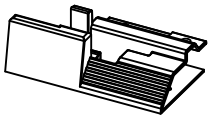 STL **1x** | 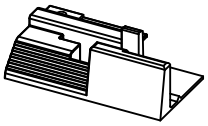 STR **1x** | 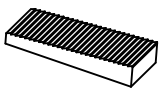 SP **2x** |
| rubber sealing strip  X7 **1x** |  Y6 **1x** |  Y7 **1x** | |

# Parts List (Box 4)

| | | | |
|---|---|---|---|
| 1573x316<br>  <br>M3 **4x** | 1573x182<br>  <br>M4A **2x** | 1573x182<br>  <br>M4B **2x** | |
| 980x268<br>  <br>A15B **1x** | 980x360<br>  <br>A15C **1x** | 980x275<br>  <br>A15D **2x** | 980x353<br>  <br>A15E **2x** |
| 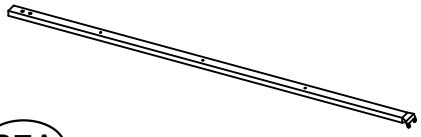 <br>R7A **4x** | 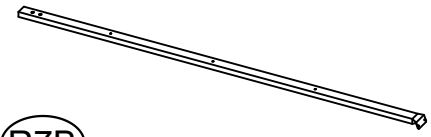 <br>R7B **4x** | 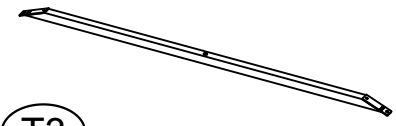 <br>T3 **4x** | |
|  <br>P8A **1x** |  <br>P8B **1x** | 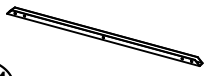 <br>DA1 **2x** |  <br>DA2A **1x** |
|  <br>DA2B **1x** | 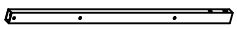 <br>U1C **1x** |  <br>DT6A **1x** |  <br>DT6B **1x** |
|  <br>D3 **6x** | 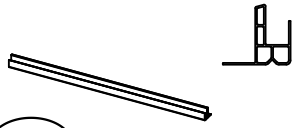 <br>D8 **2x** |  <br>E1 **1x** | 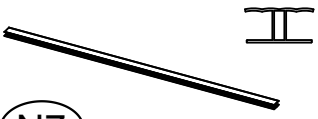 <br>N7 **2x** |
|  <br>F4L **3x** |  <br>F4R **3x** |  <br>F11L **1x** |  <br>F11R **1x** |
|  <br>J5 **4x** | 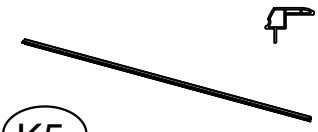 <br>K5 **4x** |  <br>V3 **4x** |  <br>W3 **4x** |
| 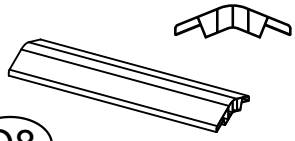 <br>Q8 **1x** |  <br>G4 **4x** |  <br>SEI **3x** | 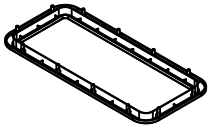 <br>SEO **3x** |

## Parts List (Box 4)

| | | | |
|---|---|---|---|
| X1 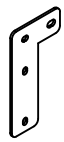 **2x** | X2 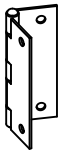 **6x** | X3 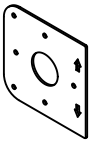 **1x** | X4 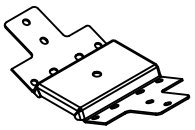 **2x** |
| X4B 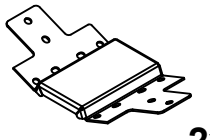 **2x** | X5 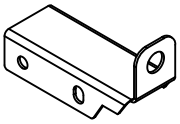 **9x** | X11  **4x** | |
| 1 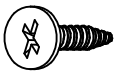 ST3.8x12 **143x** | 2  ST3.8x14 **239x** | 3  ST3.8x12 **24x** | 4  ST4.8x32 **156x** |
| 6  ST2.8x12 **54x** | 7  M6x15 **54x** | 8  M6x40 **28x** | 9  M6 **28x** |
| 10 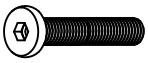 M8x45 **2x** | 11  M6 **28x** | 12 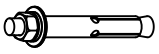 M8x80 **9x** | 13  ST3.8x20 **38x** |
| **TOOL:** | Y1 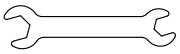 **1x** | Y2  5MM **1x** | Y3 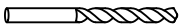 **1x** |
| | NOTE: The plastic pieces are guide pieces to assist in inserting wall panels. Y8 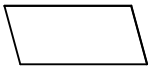 **2x** | | |

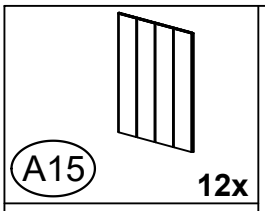
A15
12x

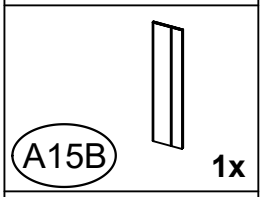
A15B
1x

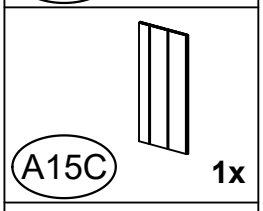
A15C
1x

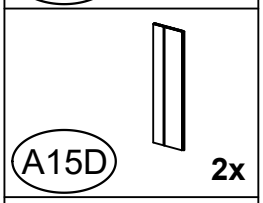
A15D
2x

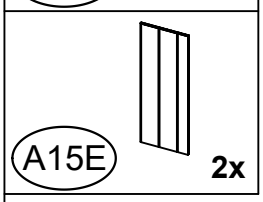
A15E
2x

## <1>

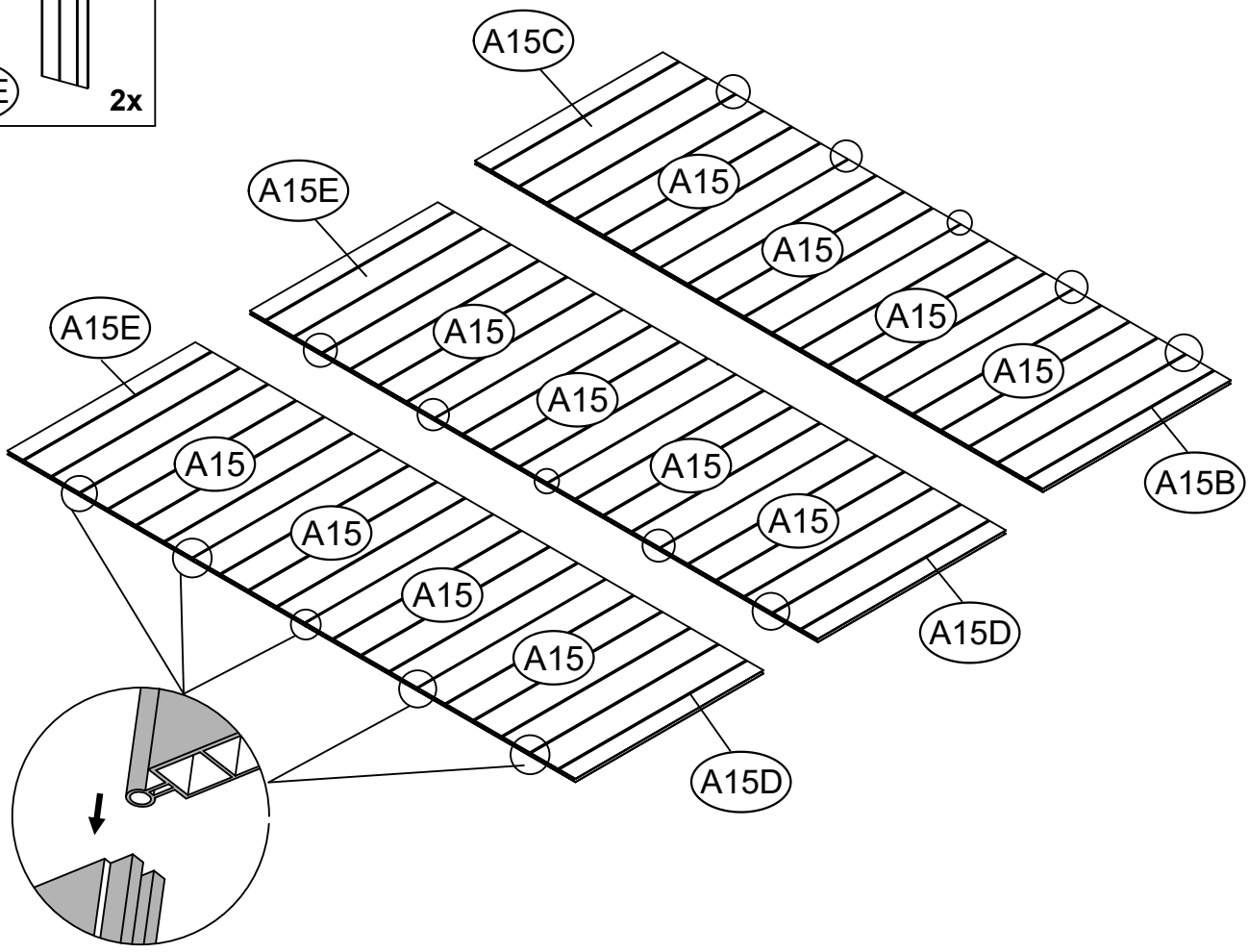
A15C
A15
A15
A15
A15
A15B
A15E
A15
A15
A15
A15
A15D
A15E
A15
A15
A15
A15
A15D



E1

1x

## <2>

Position the base plates (A15, A15B, A15C) upright. Open the slot on part E1. Insert E1 from the left side toward the center, ensuring equal spacing on both sides.

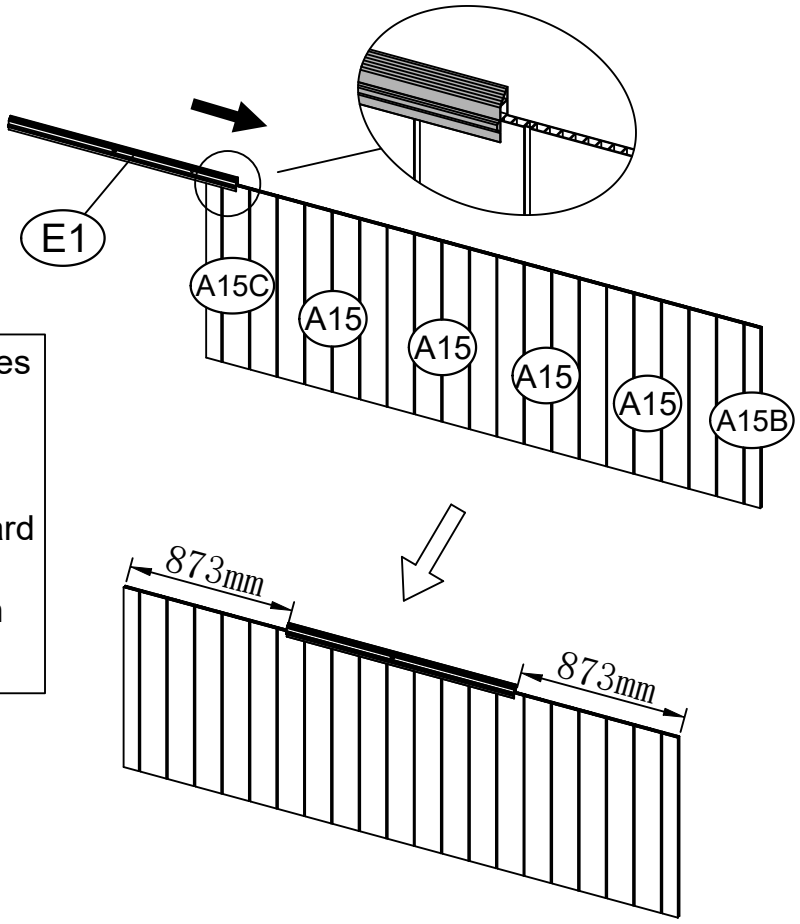




1x

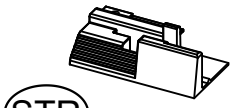


1x




2x

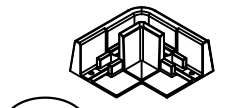


2x

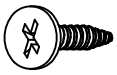

ST3.8x12

1

11x

## <3>

Install the STL and STR components adjacent to the front door slot component E1. Gently tap the left and right thresholds as shown in the detail view to ensure the base plate sits flush with both sides. Then, secure all components mentioned above using eleven (11) No.1 screws.

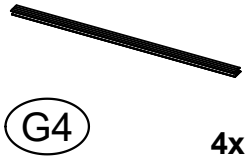

G4 4x

## <4>

Place the base plates #A15 and #A15D and #E15E as shown in the figure, aligning both ends and leaving a 10mm gap in the middle. One person holds floor in place at one end, while another person inserts #G4 through the middle at the other end.

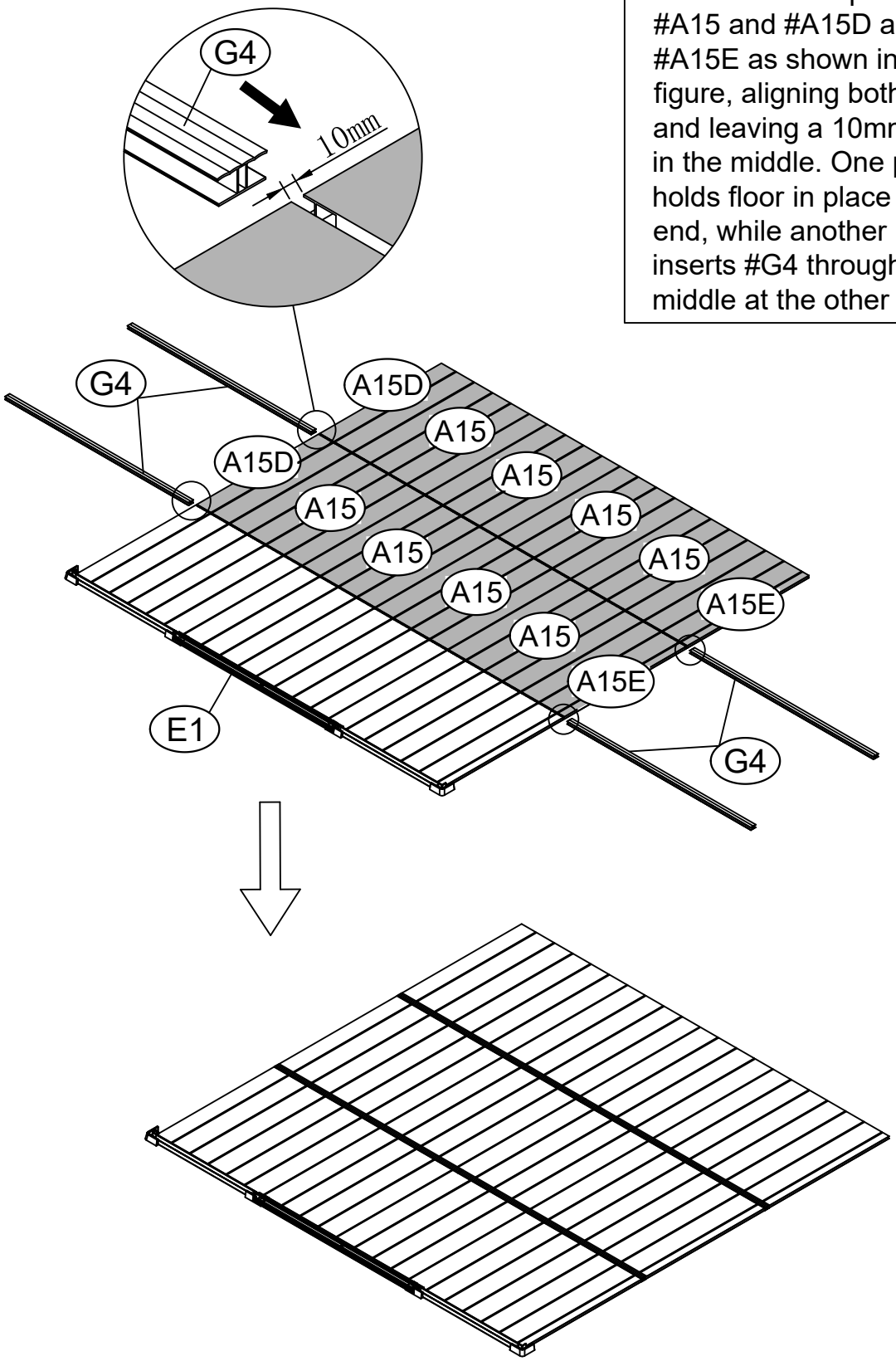

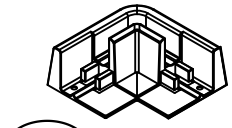

SH **2x**

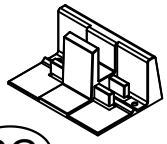

SG **3x**



D3 **6x**



ST3.8x12

1 **12x**

## <5>

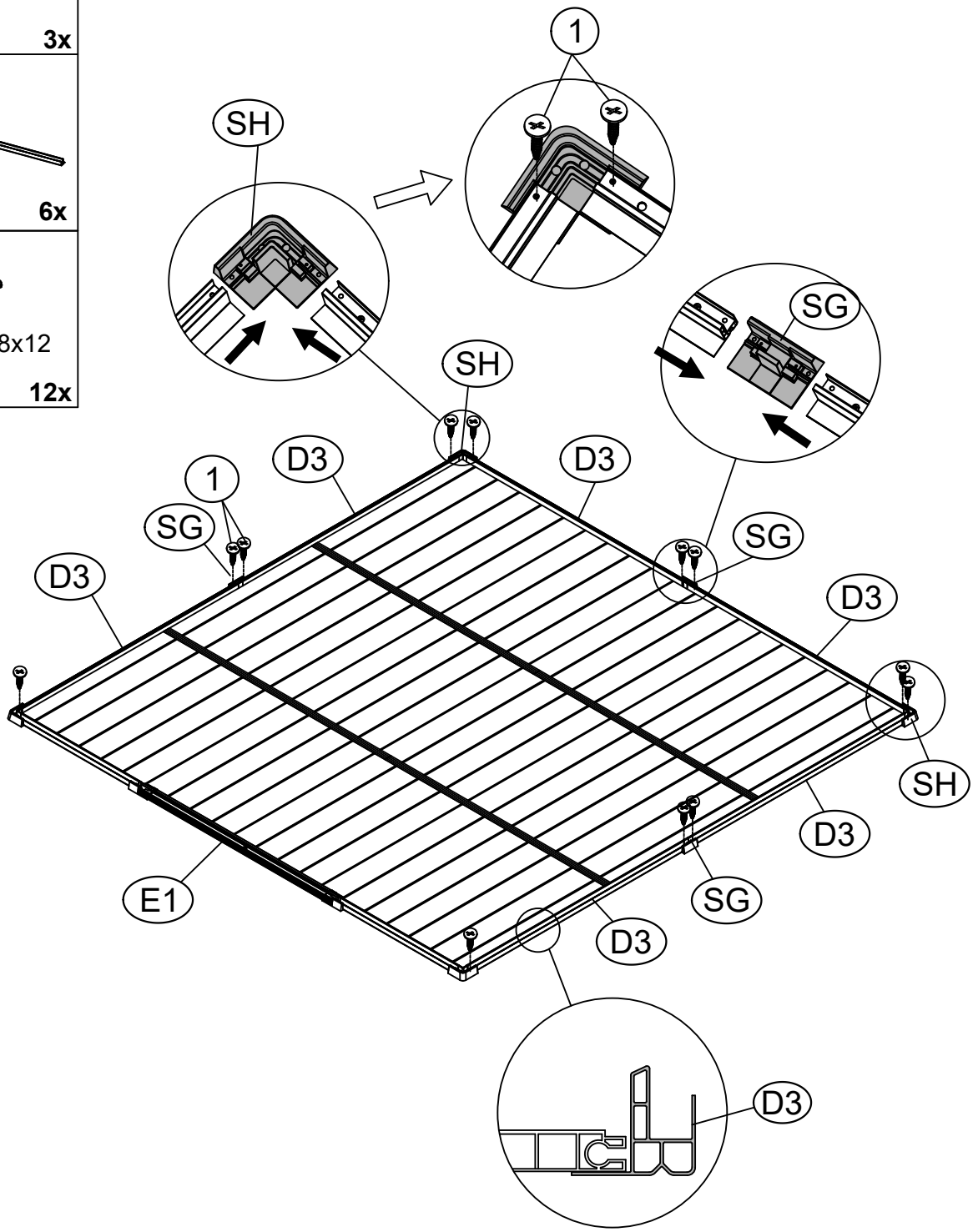



F11L **1x**



F11R **1x**



F4L **3x**



F4R **3x**



ST3.8x14

2 **30x**

## <6>

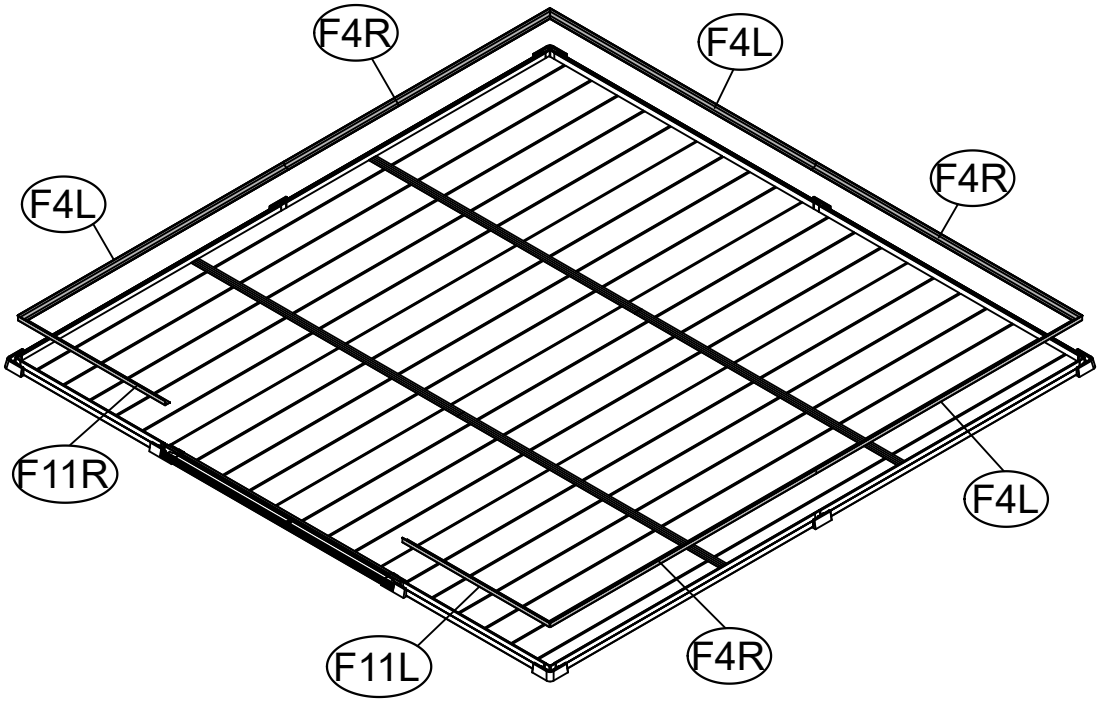


Push the bottom pipe assemblies (D3) inward until their ends are flush with the floor surface. Then, secure the flooring using self-tapping screws.

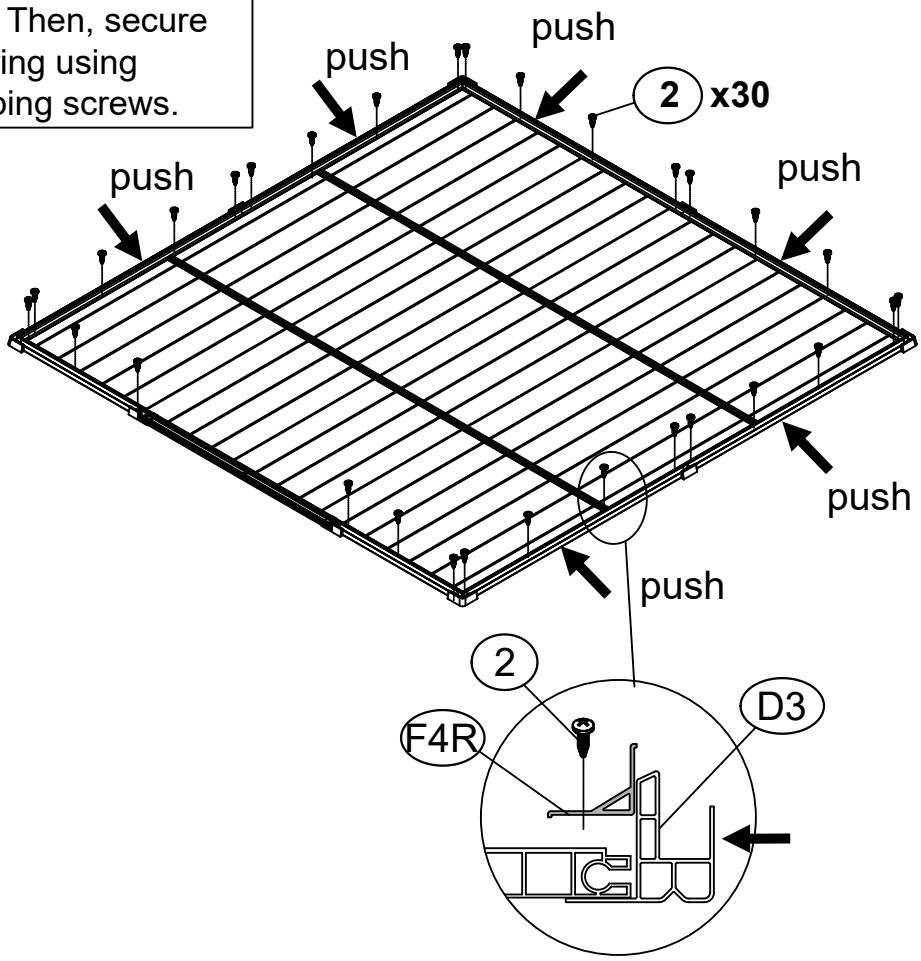

## <7>

The window can be positioned according to your lighting needs and the intended layout as shown in the diagrams.

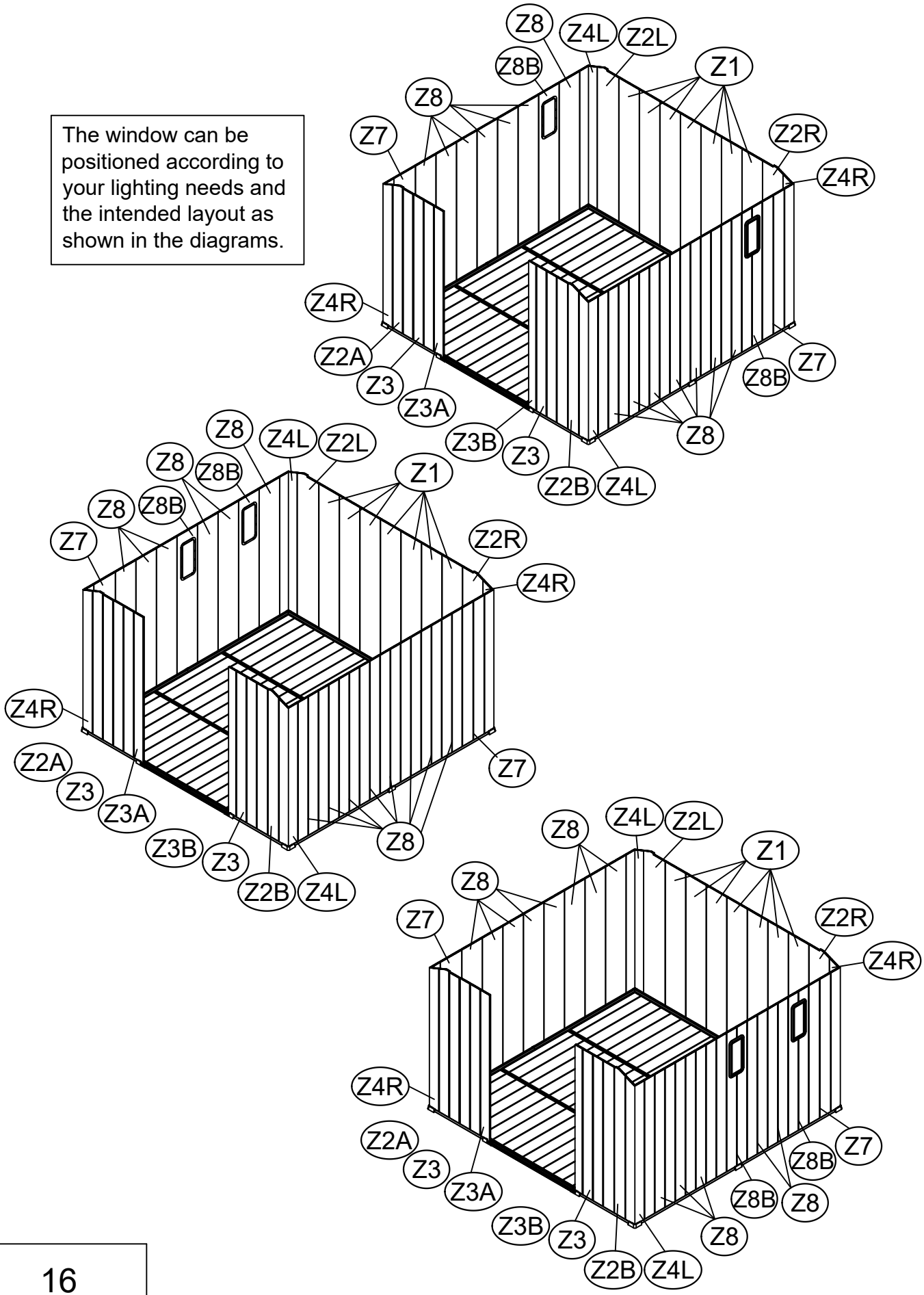

Z4L 2x

Z4R 2x

## <8>

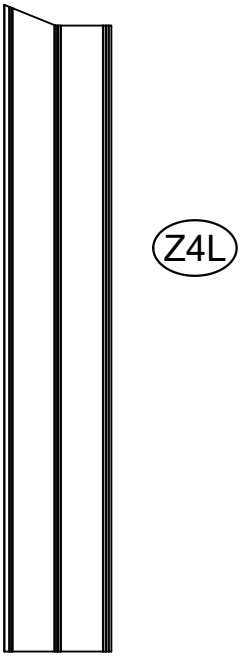

Z4L

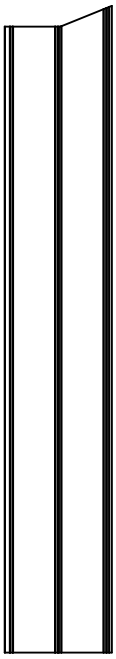

Z4R





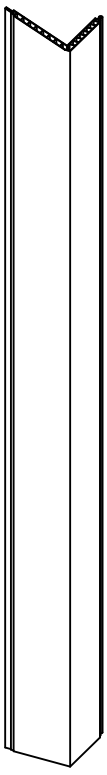

NOTE: Bend the panel inward with the smooth surface facing the interior.

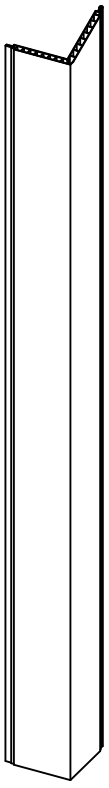

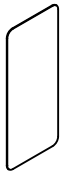

2x



SEI

2x

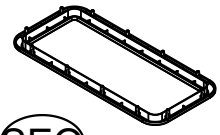

SEO

2x



Z8B

2x



X7

1x



ST2.8x12

6

24x



**<9>**

1

rubber sealing strip

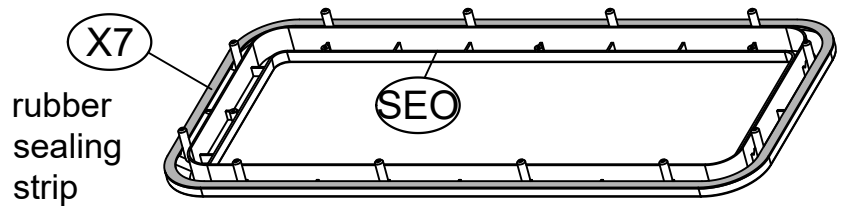


2

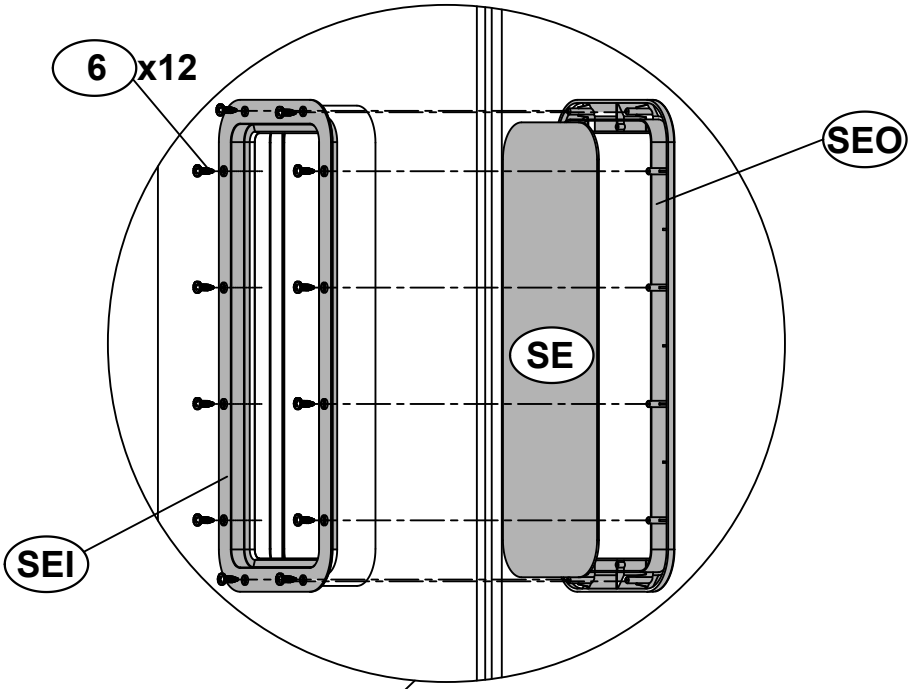


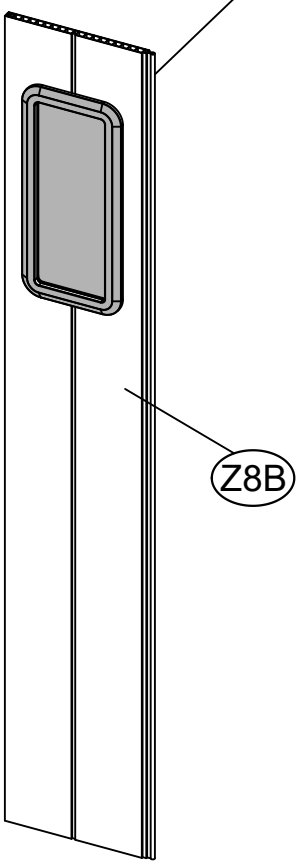

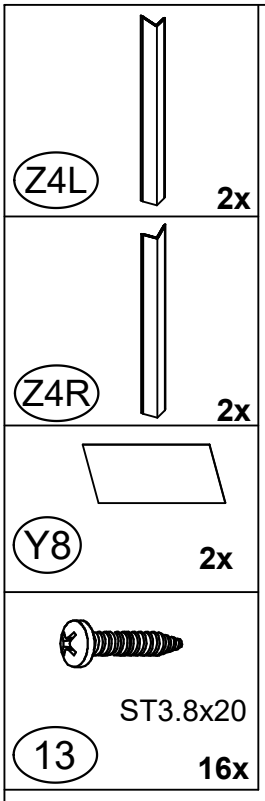


## <10>

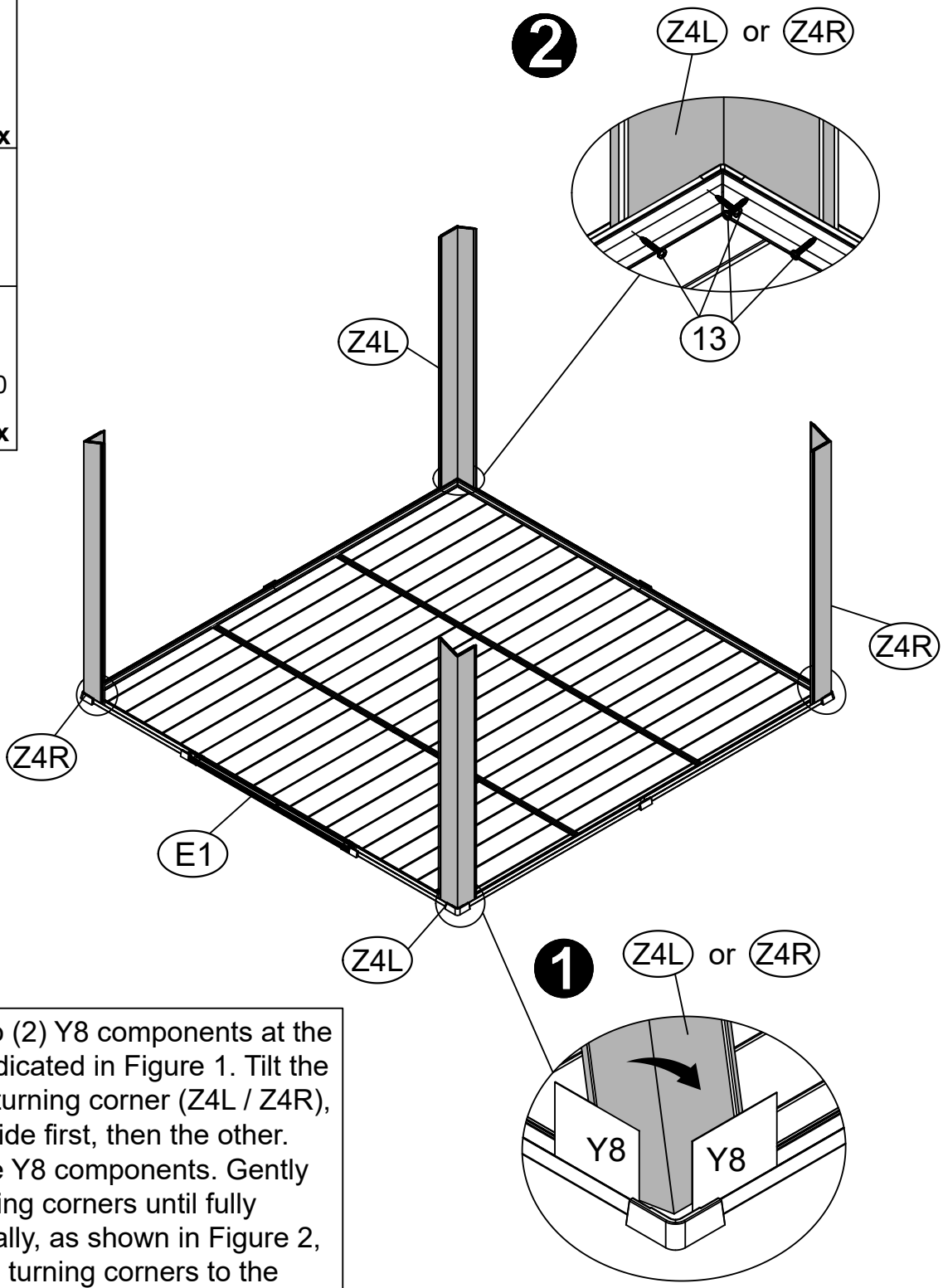


Position two (2) Y8 components at the locations indicated in Figure 1. Tilt the left or right turning corner (Z4L / Z4R), insert one side first, then the other. Remove the Y8 components. Gently tap the turning corners until fully seated. Finally, as shown in Figure 2, secure both turning corners to the bottom frame using No. 13 screws.

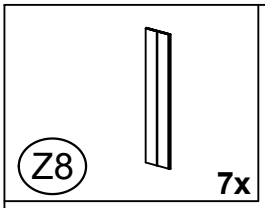


## <11>

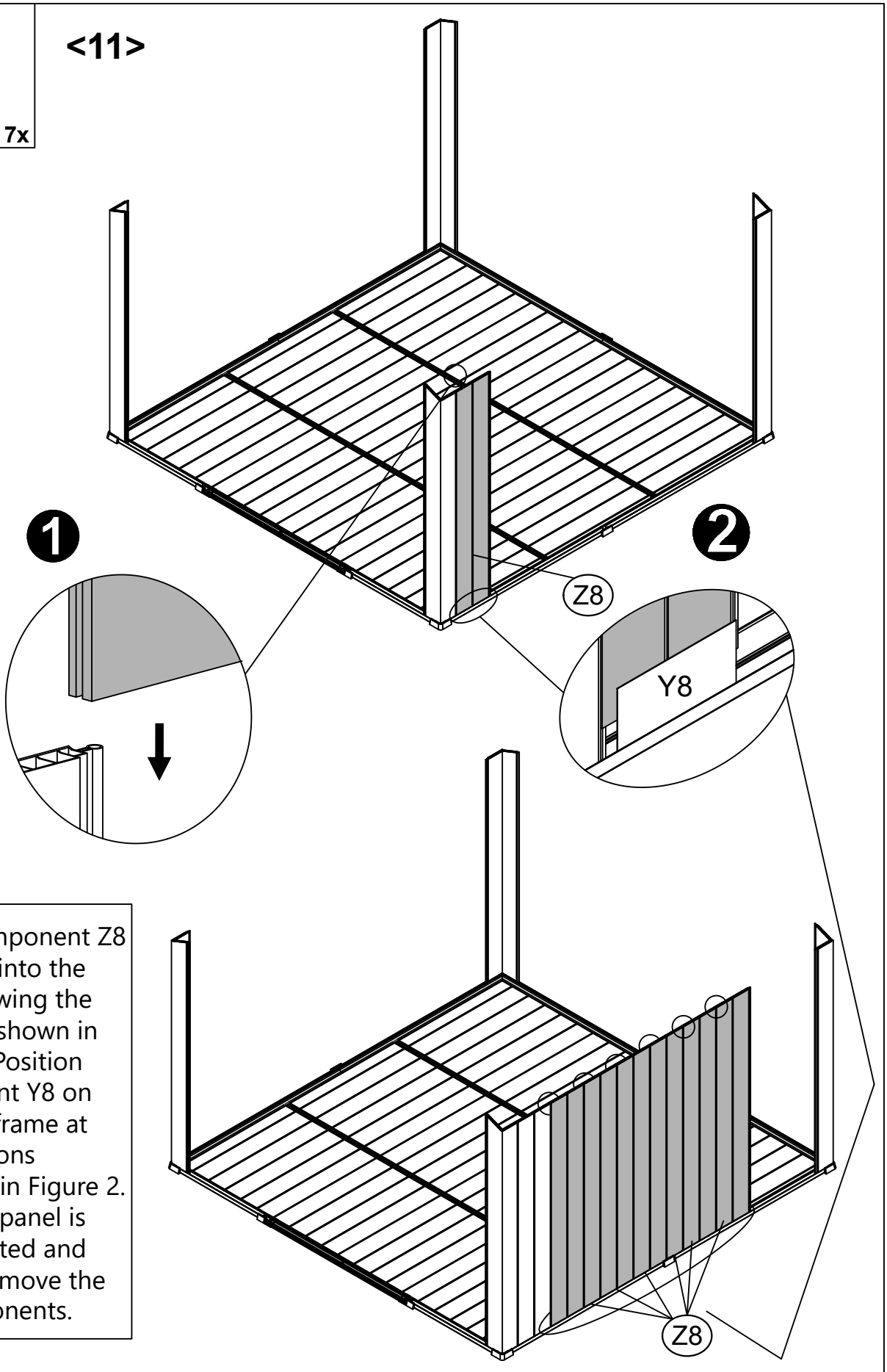


Insert component Z8 vertically into the slot, following the direction shown in Figure 1. Position component Y8 on the base frame at the locations indicated in Figure 2. Once the panel is fully inserted and seated, remove the Y8 components.

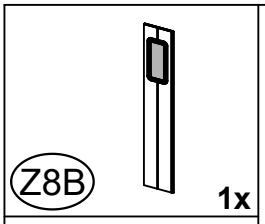


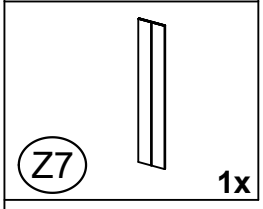


## <12>

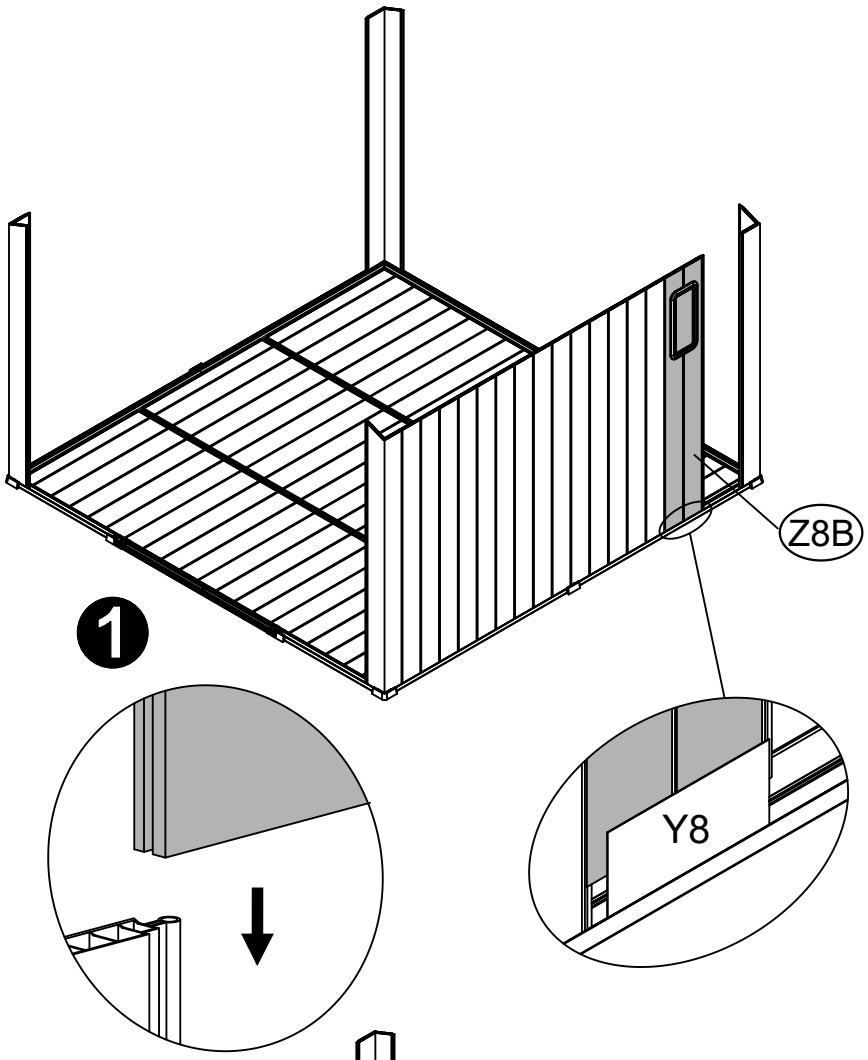


Repeat Step 11 to assemble components Z8B and Z7 on the other side.

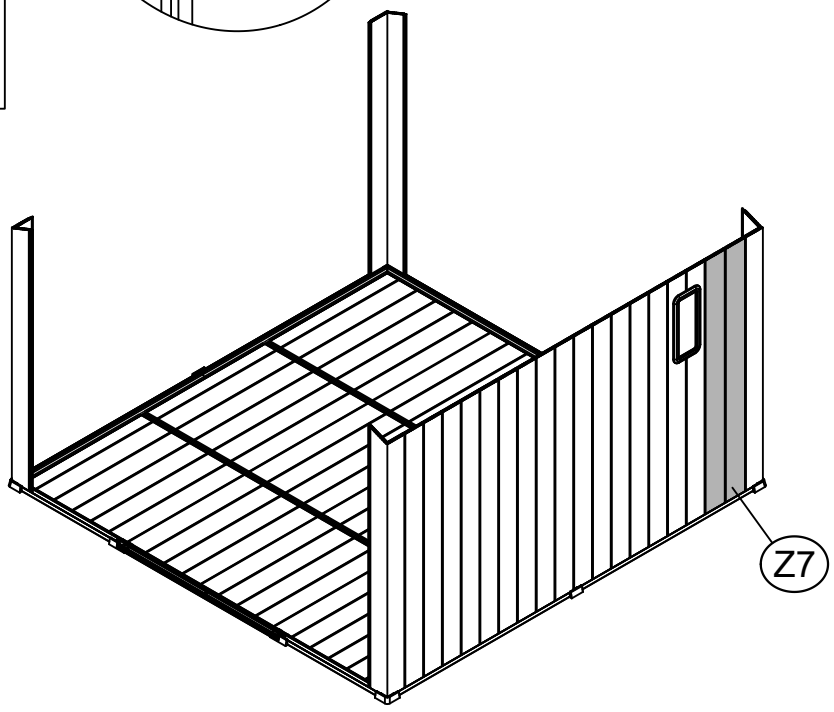

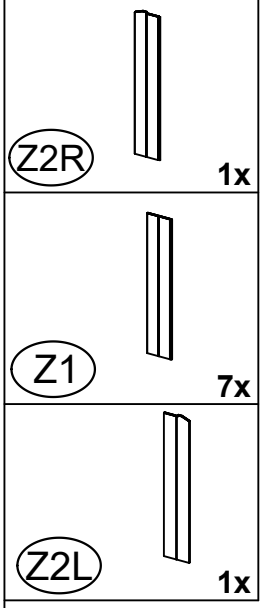


## <13>

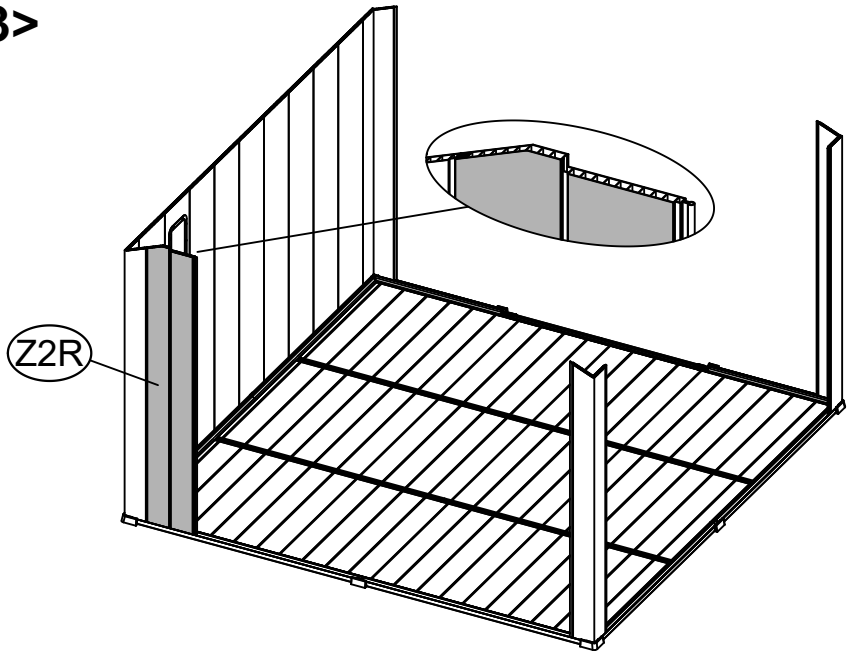


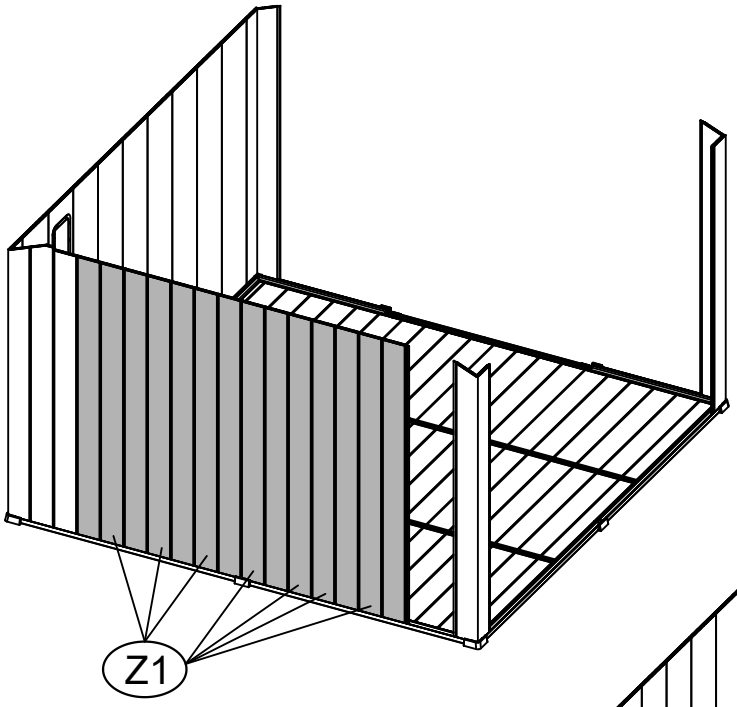


Repeat Step 11 to assemble components Z2R, Z1, and Z2L on the other side.

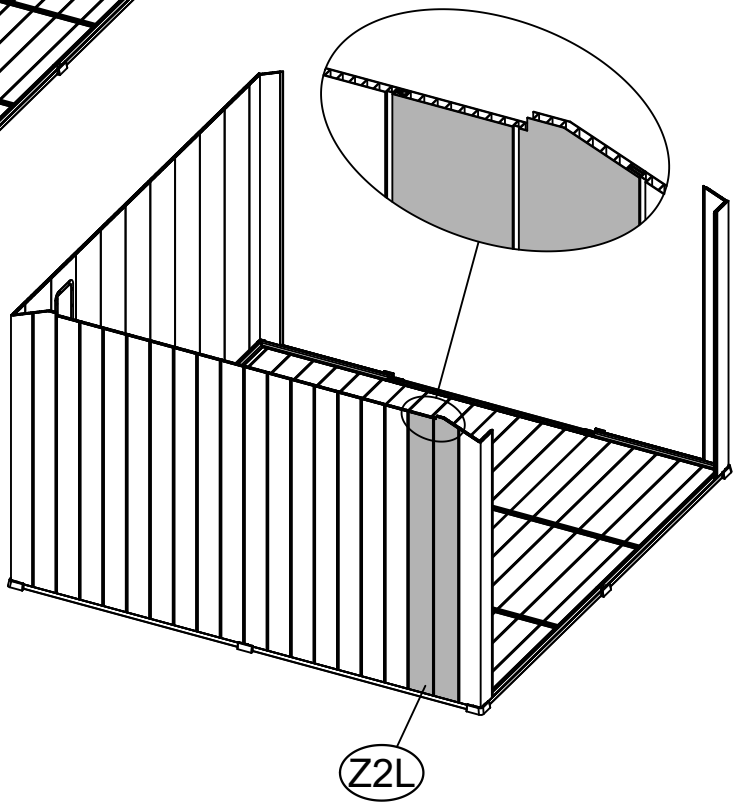

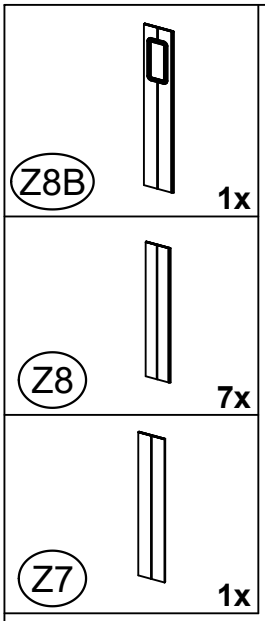


## <14>

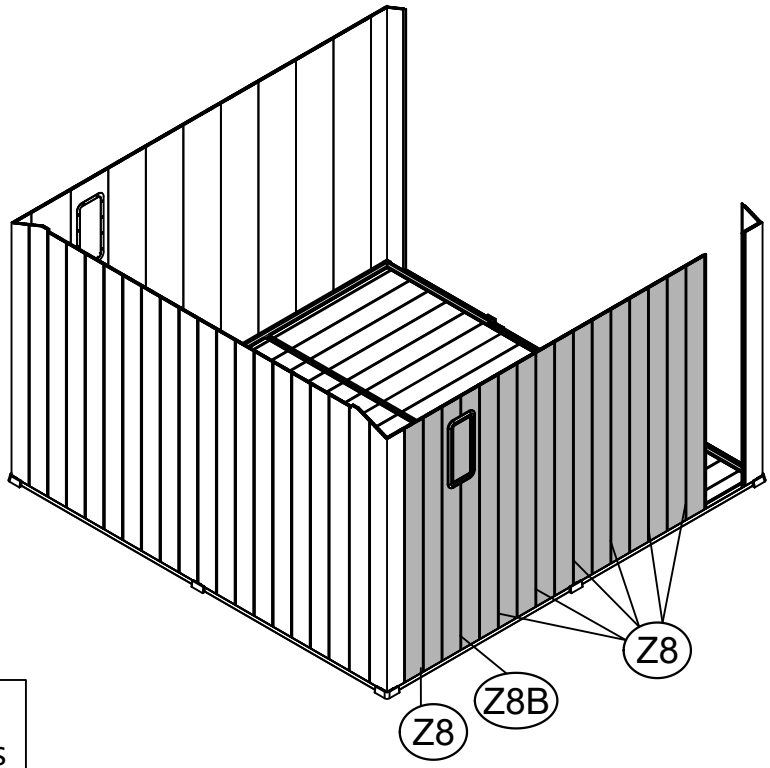


Repeat Step 11 to assemble components Z8, Z8B, and Z7 on the other side.

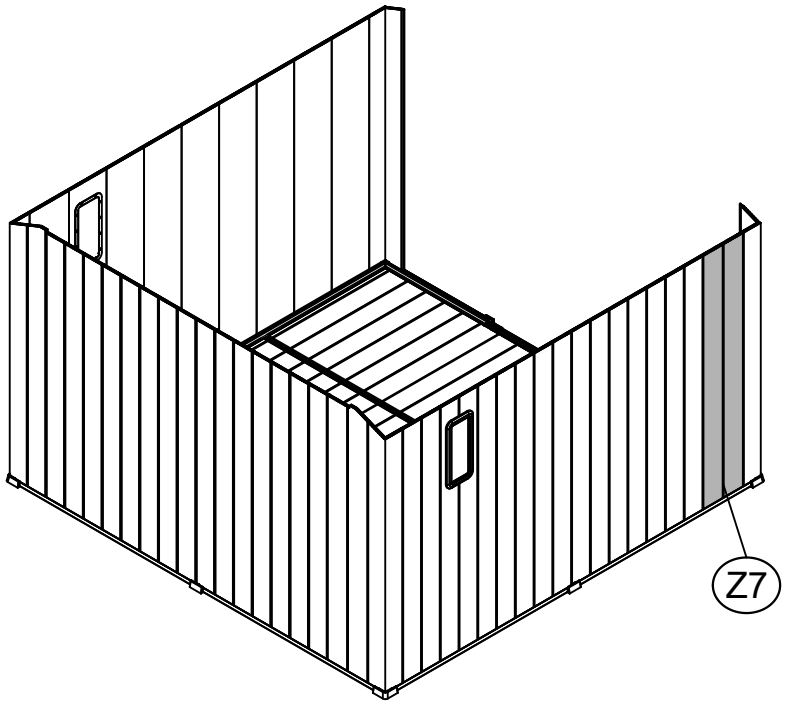

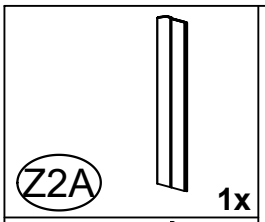


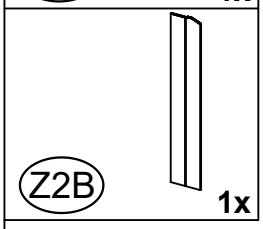


## <15>

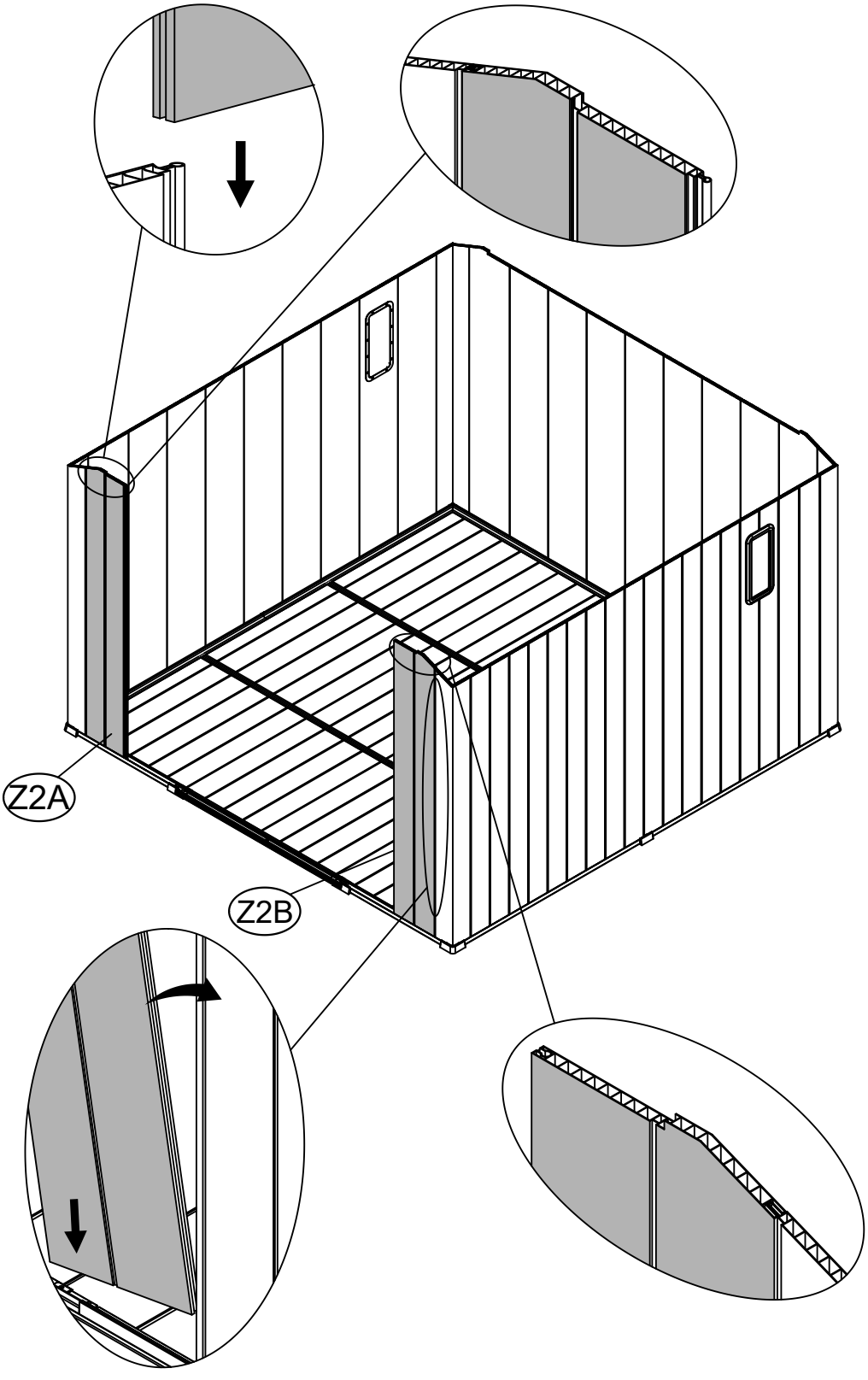

Z3 2x

Z3A 1x

Z3B 1x

## <16>

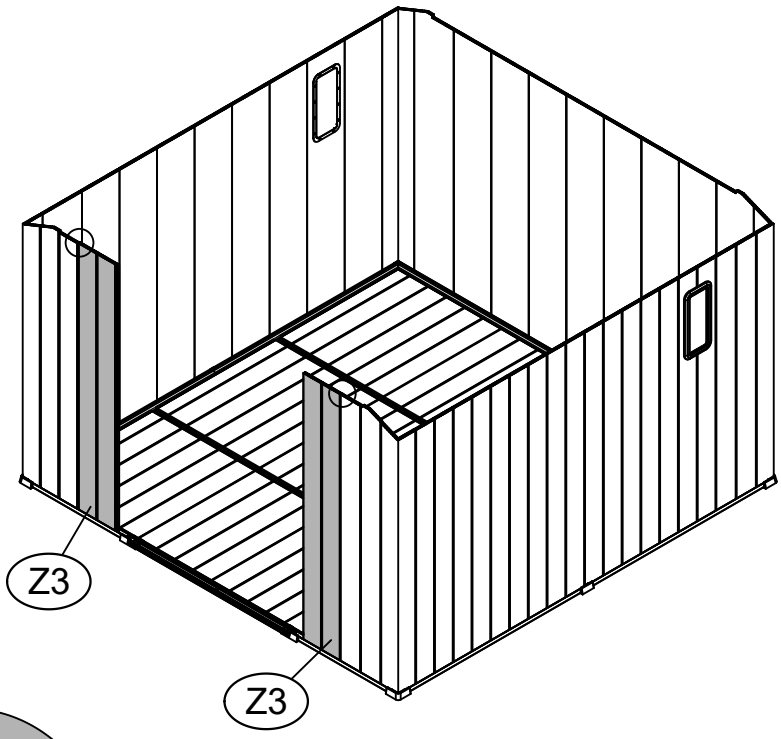


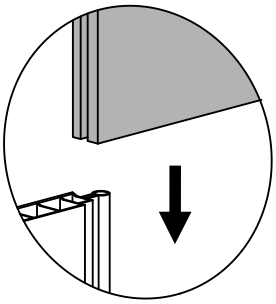

Repeat Step 11 to assemble components Z3, Z3A, and Z3B on the other side.

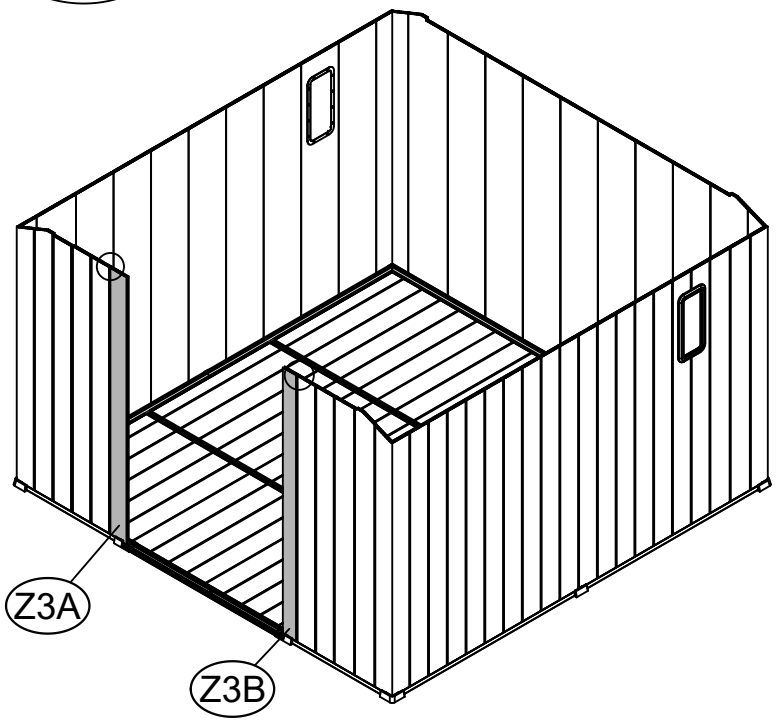

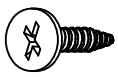

ST3.8x12

1 **72x**



ST3.8x20

13 **22x**

## <17>

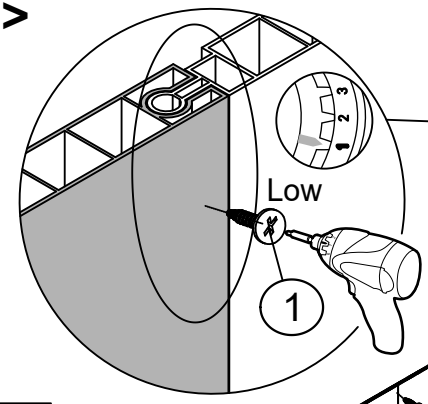


The screw is screwed in at the junction of the board

Install #13 screws around the bottom edges.

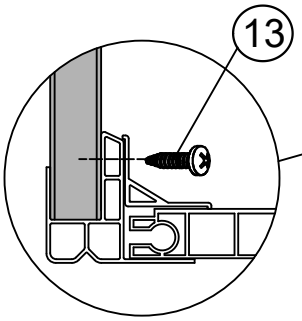


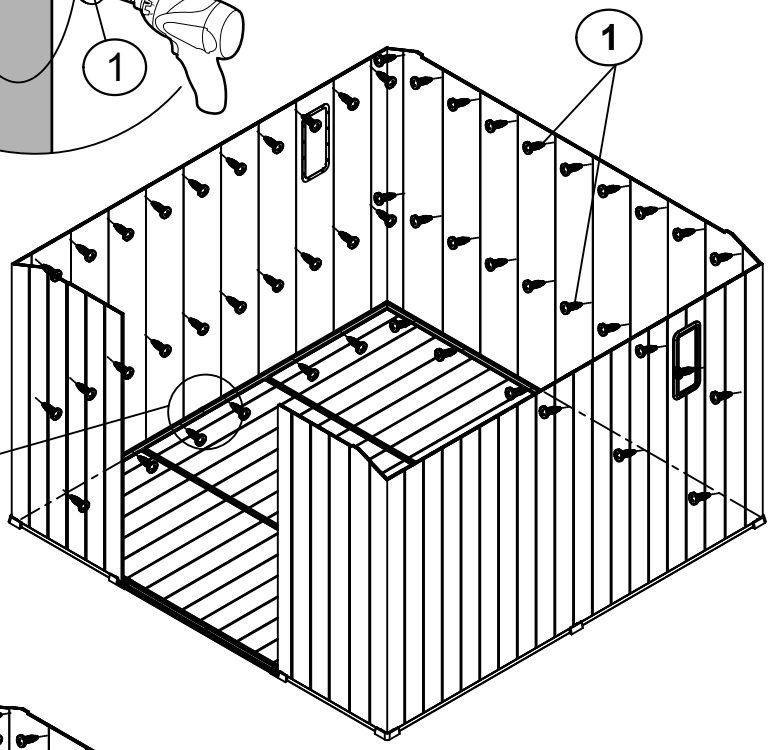


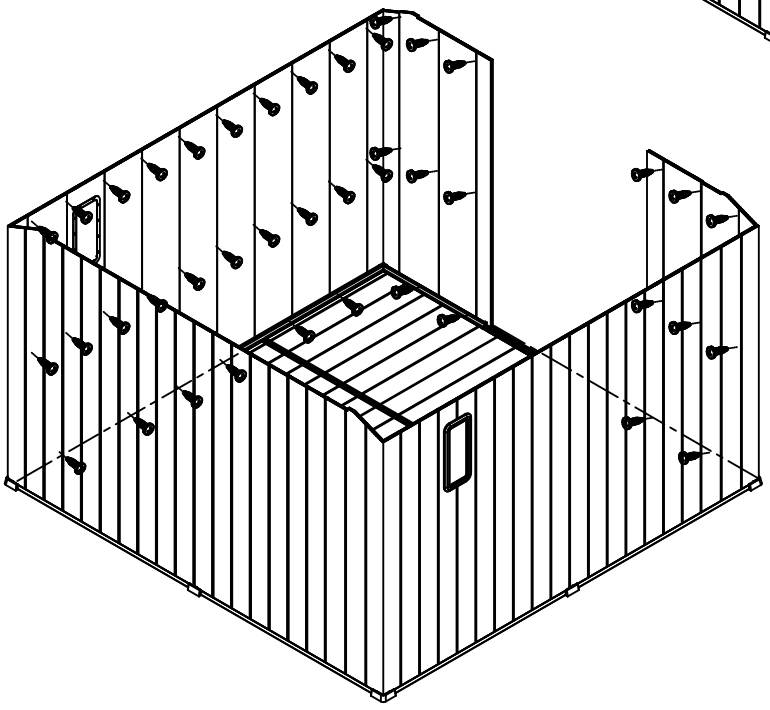

**Tool:**



Using a hammer, gently tap the top edge of each panel to ensure they are aligned to the same level (excluding any specially marked positions). Then, secure them by driving in the screws.
Note: Minor deformation or damage at the component ends caused by tapping will not affect assembly or functionality.



DR **1x**



DL **1x**



ST3.8x14

2 **20x**

# <18>

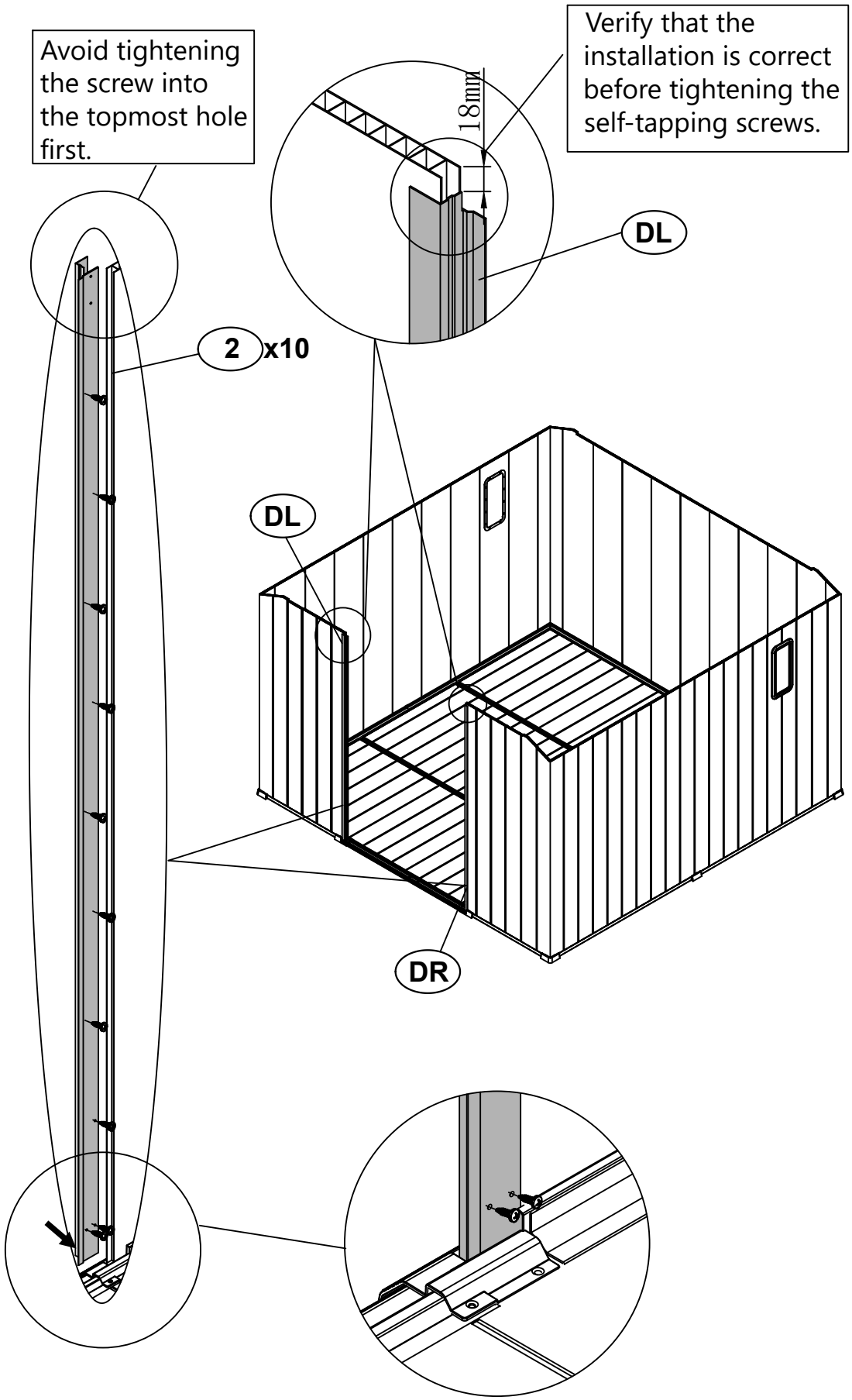

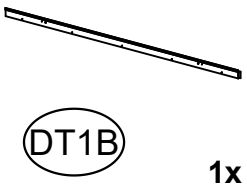

DT1B 1x

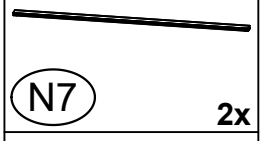

N7 2x

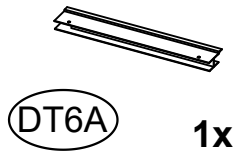

DT6A 1x

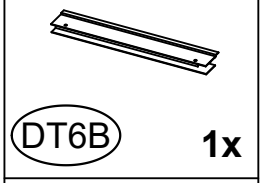

DT6B 1x



ST3.8x14

2 6x

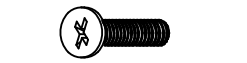

M6x15

7 2x



X1 2x

## <19>

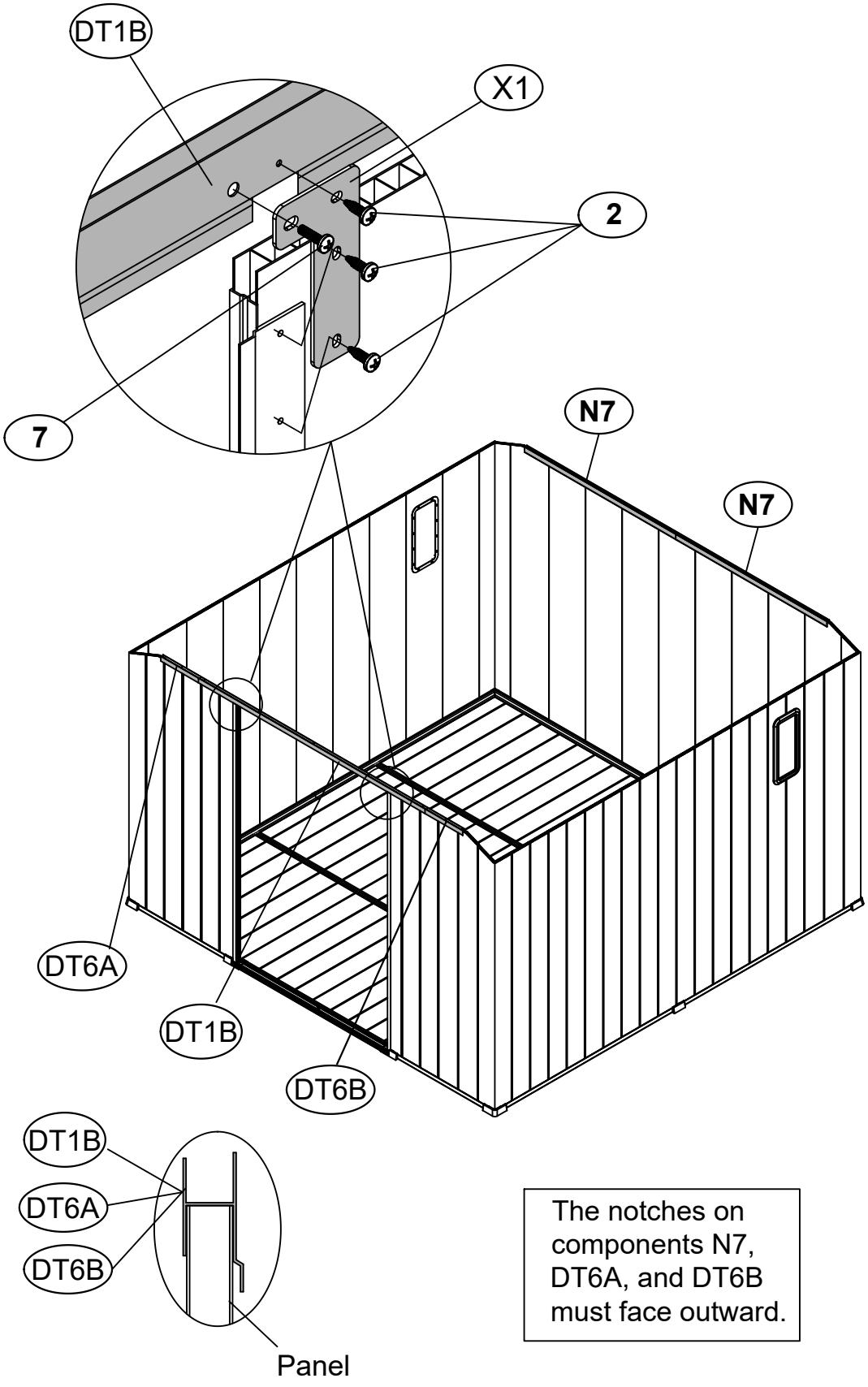


The notches on components N7, DT6A, and DT6B must face outward.

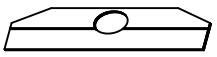

Z9A **2x**



Z9C **2x**



SFI **2x**



SFO **2x**



ST3.8x14

2 **18x**

# <20>

Pay attention to the orientation of the ventilation window. The louver blades must be angled downward to prevent water leakage. Incorrect installation will result in water ingress into the interior.

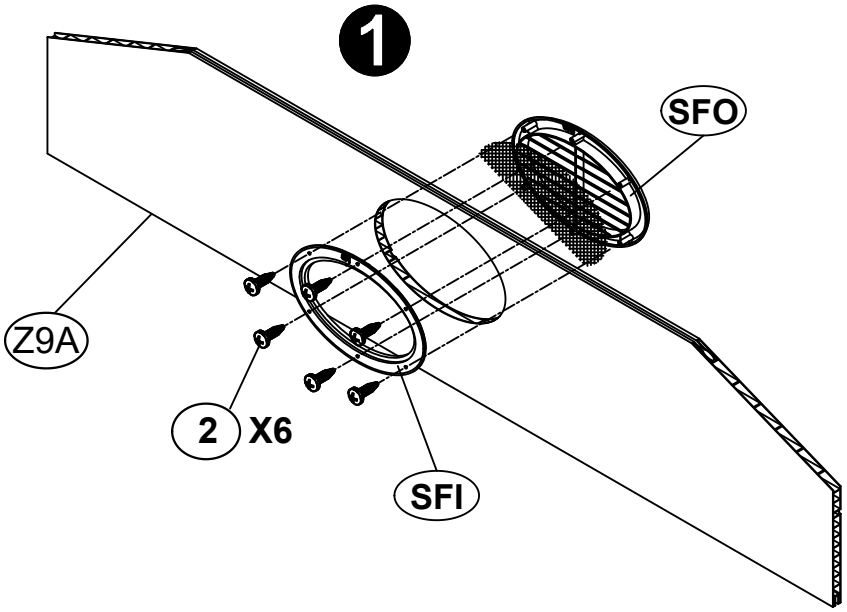


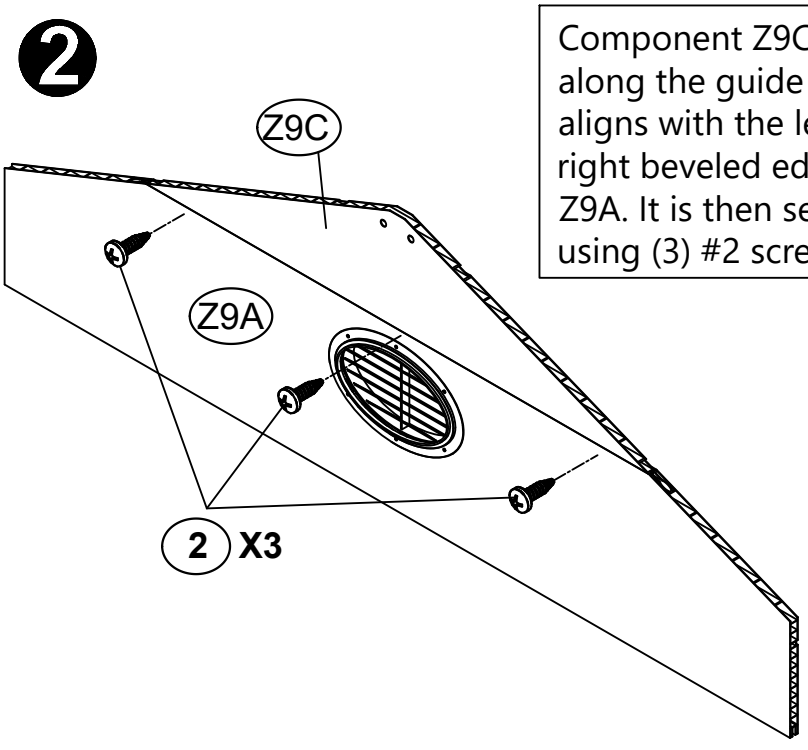


Component Z9C slides along the guide rail and aligns with the left and right beveled edges of Z9A. It is then secured using (3) #2 screws.

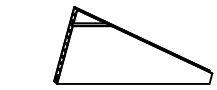

Z9F **2x**

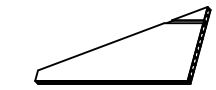

Z9E **2x**



N9 **4x**



ST3.8x14

2 **29x**

## <21>

First, insert components Z9A, Z9C (arrow pointing toward the center), Z9E, and Z9F into the slots of either DT1B, DT6A, DT6B, or N7, as shown in the diagram below. Then, slide component N9 downward from the top. Finally, install the corresponding screws as indicated.

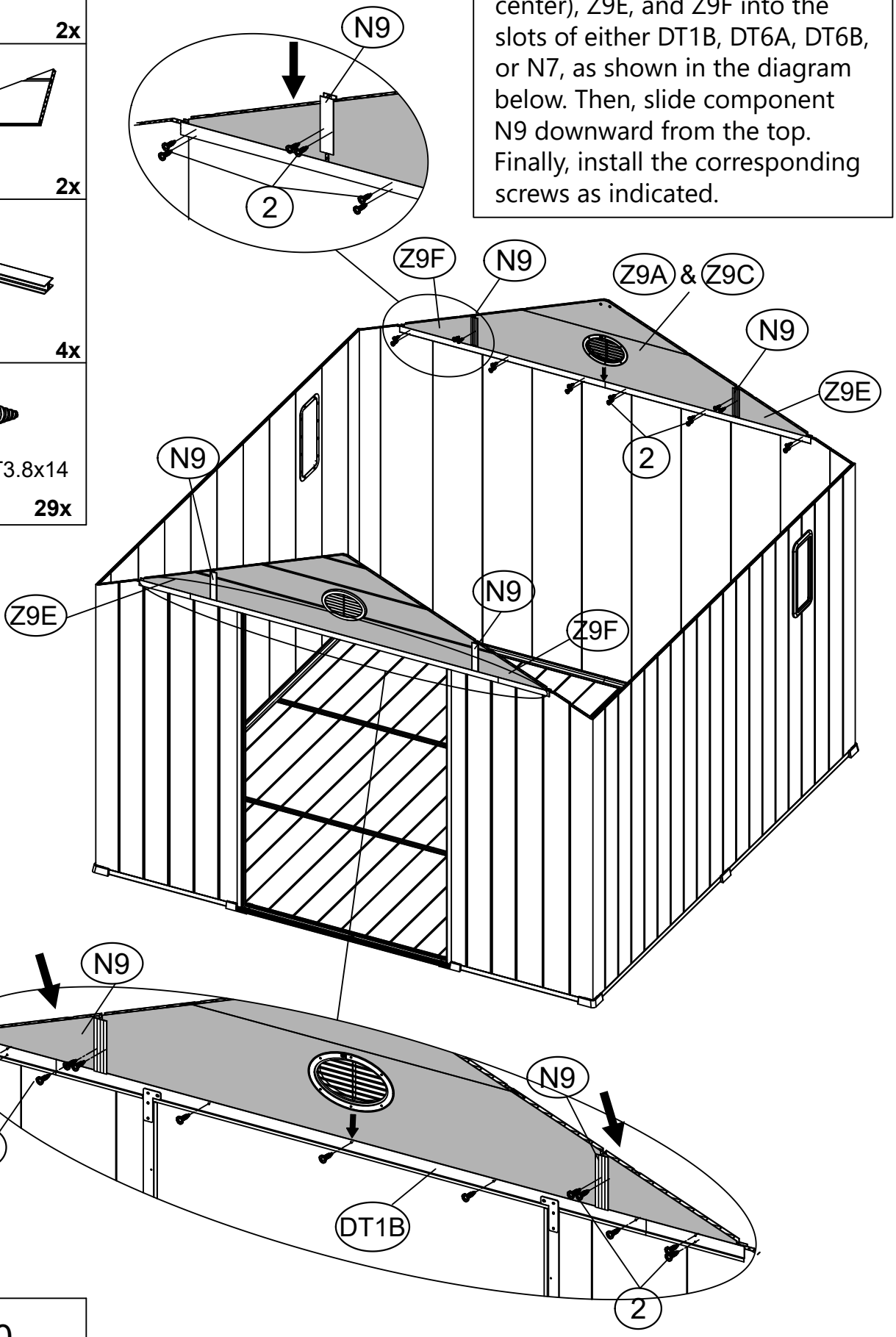

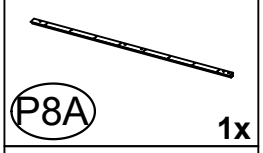

P8A 1x

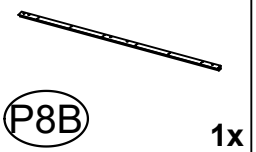

P8B 1x

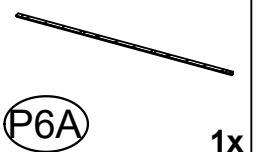

P6A 1x

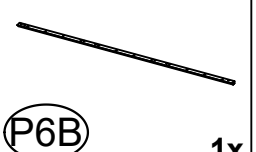

P6B 1x

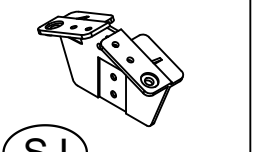

SJ 2x

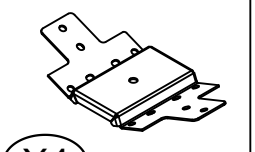

X4 2x

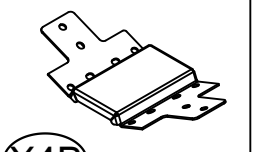

X4B 2x

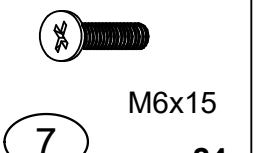

M6x15

7 24x



## <22>

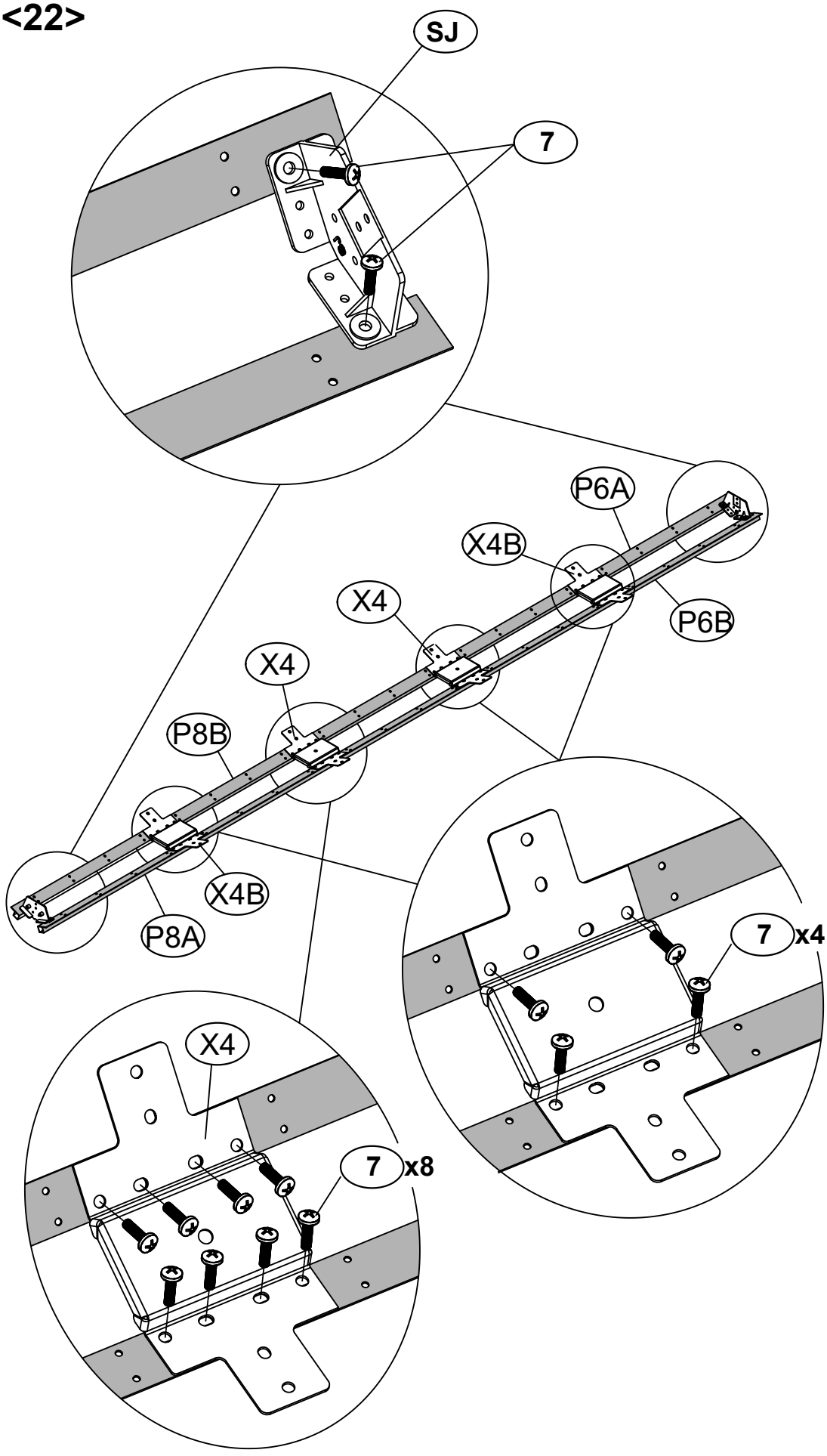



ST3.8x14

2

**4x**

# <23>

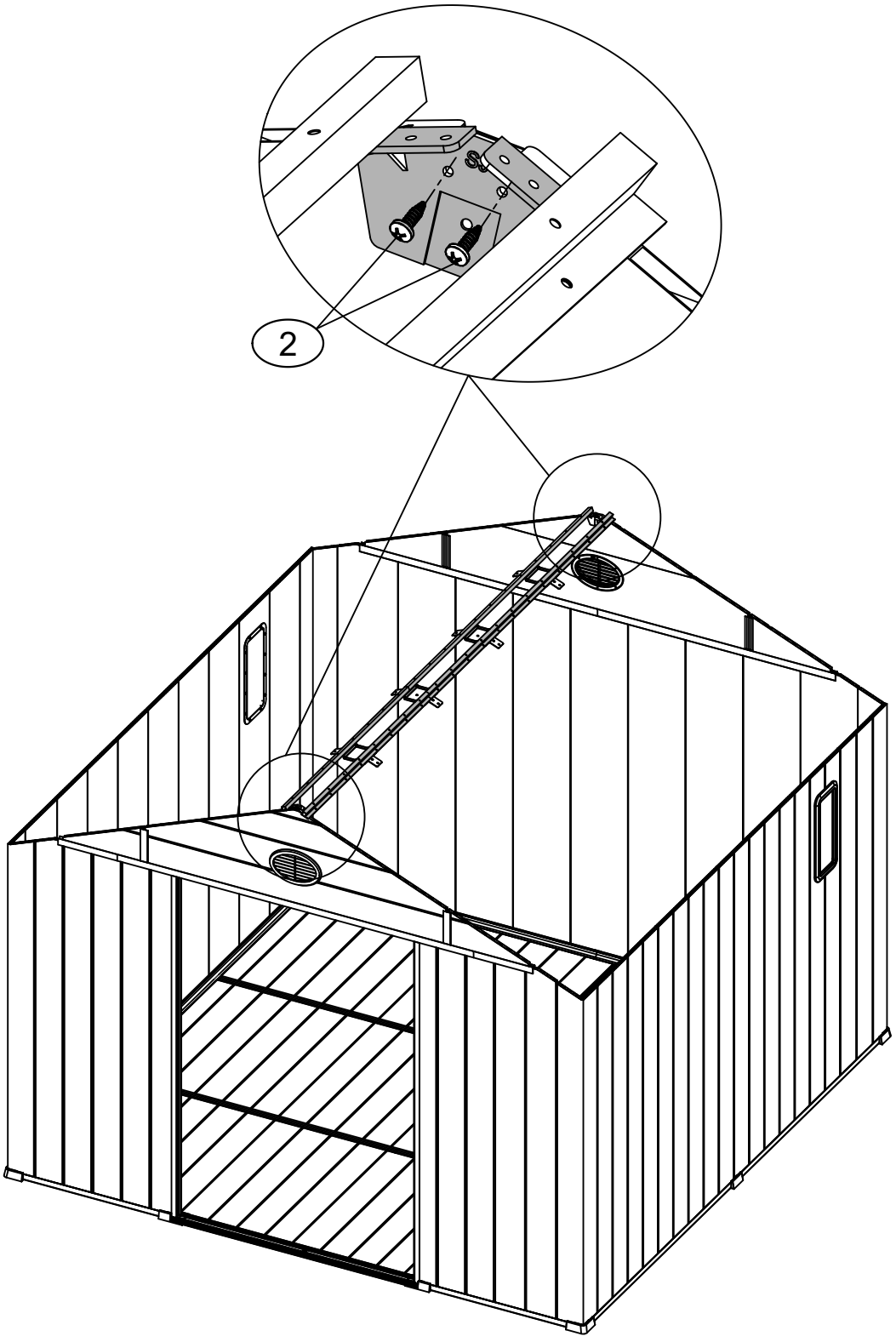

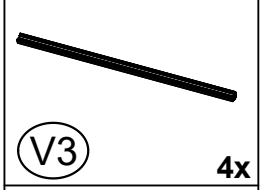

V3 **4x**

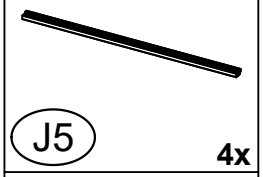

J5 **4x**

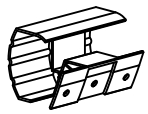

SB **2x**



ST3.8x14

2 **16x**

## <24>

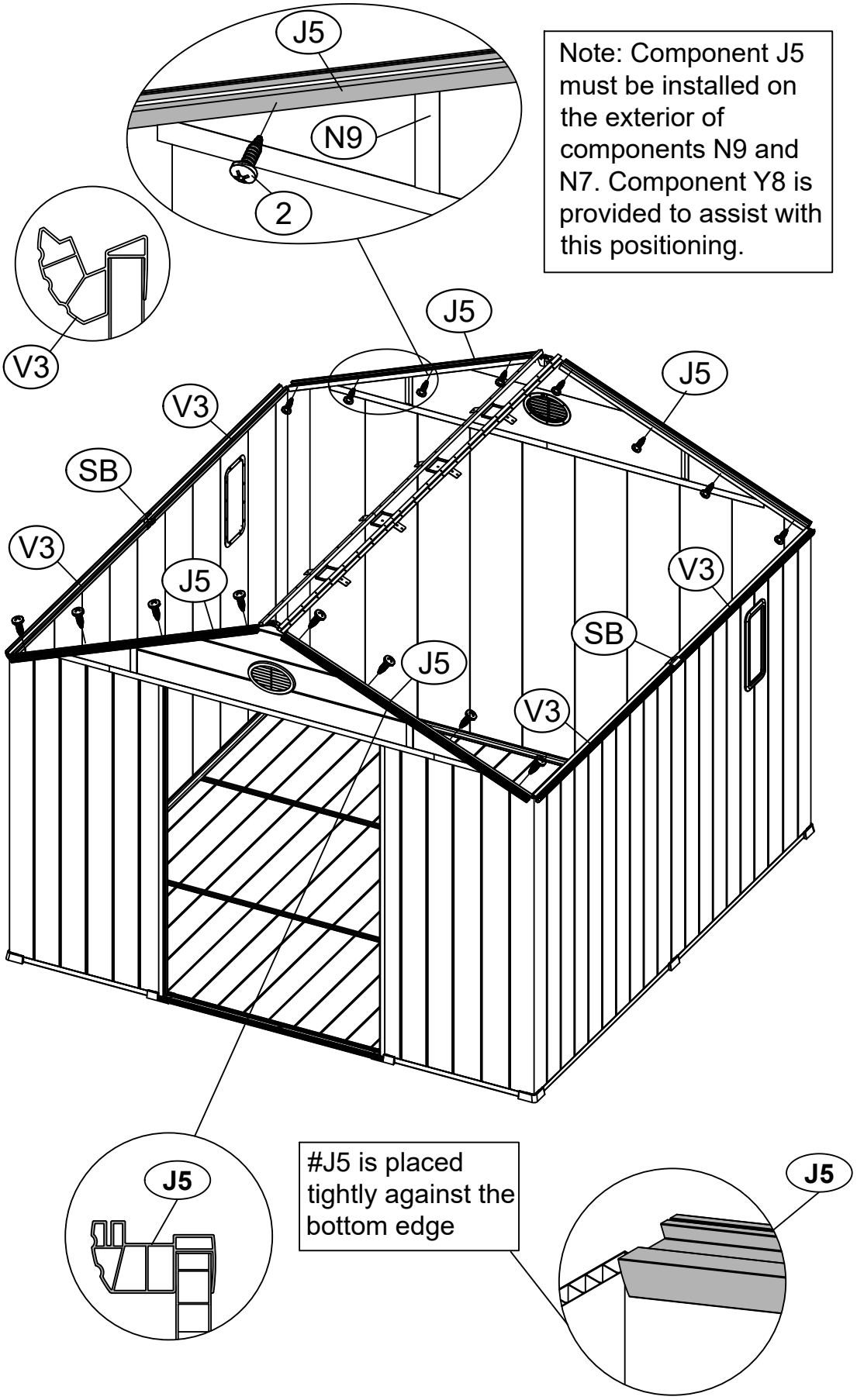

R7A **2X**

R7B **4x**

T3 **4x**

M6x15

7 **24x**

ST3.8x14

2 **20x**

## <25>

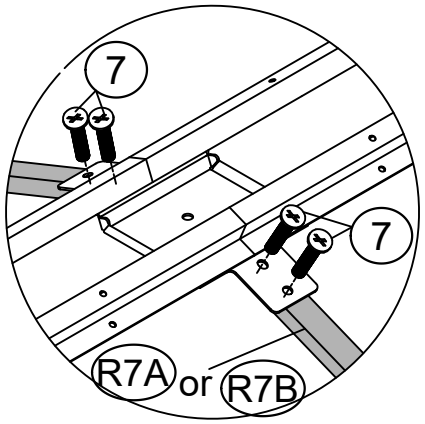


1

Ensure the upper surface of component R7B is parallel to V3, then secure it with two self-tapping screws.

3

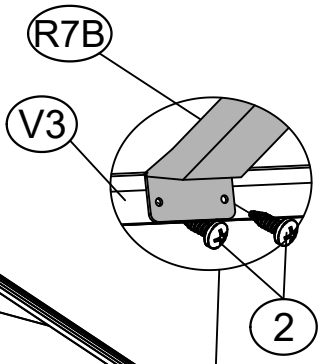


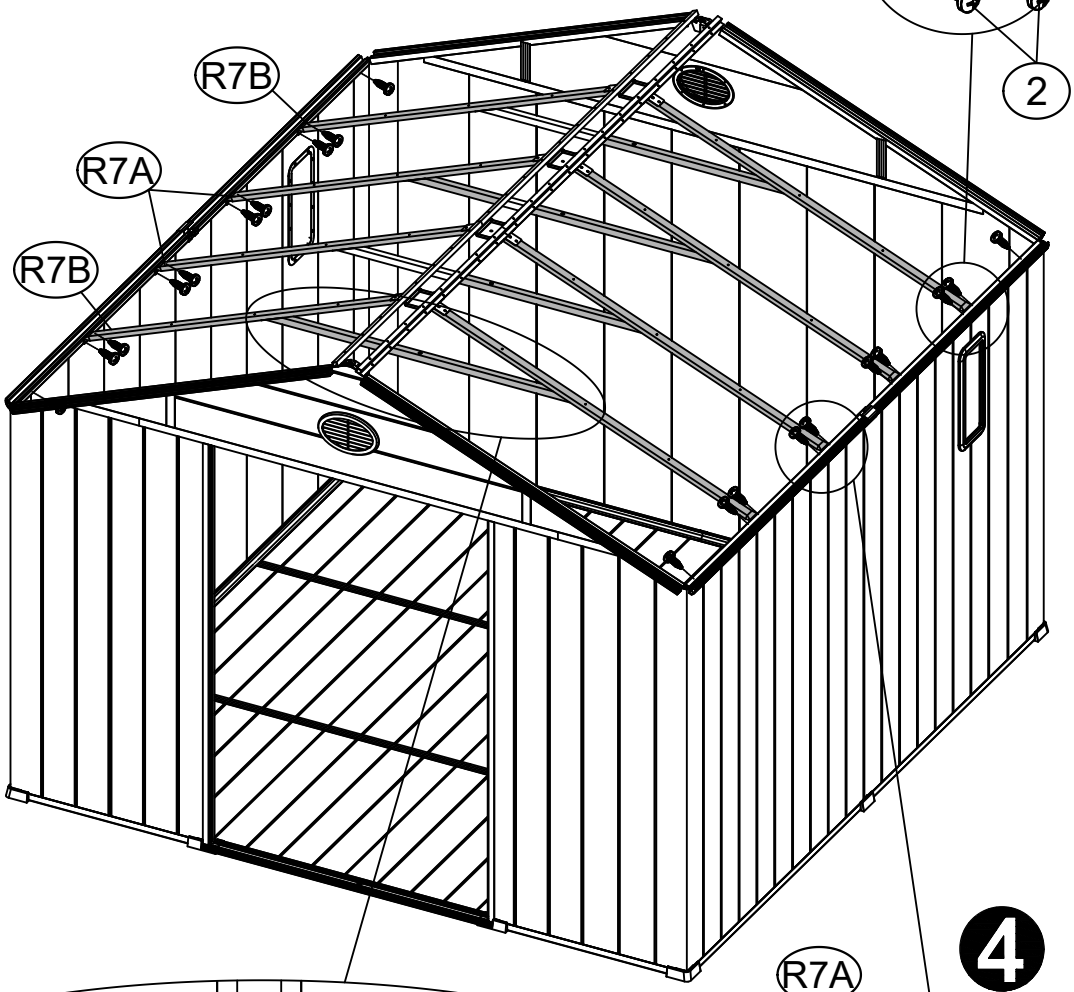


2

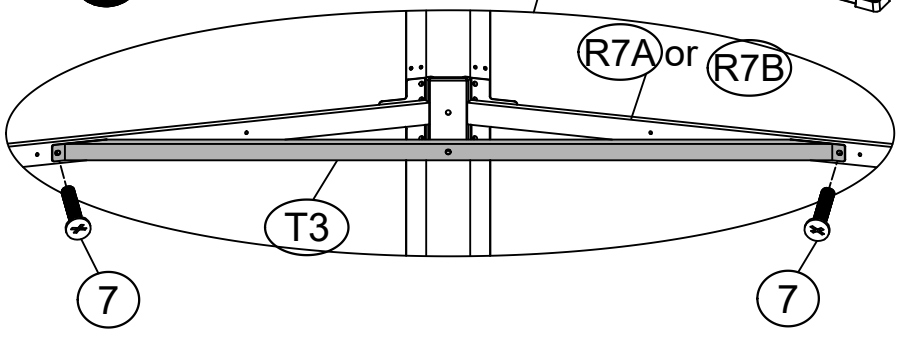


4

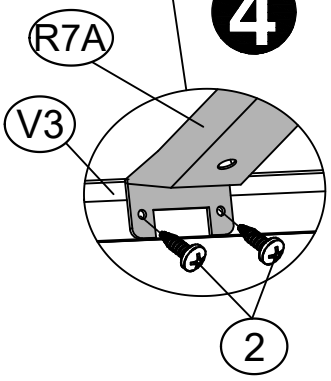

M4A 2x

M4B 2x

M3 4x

# <26>

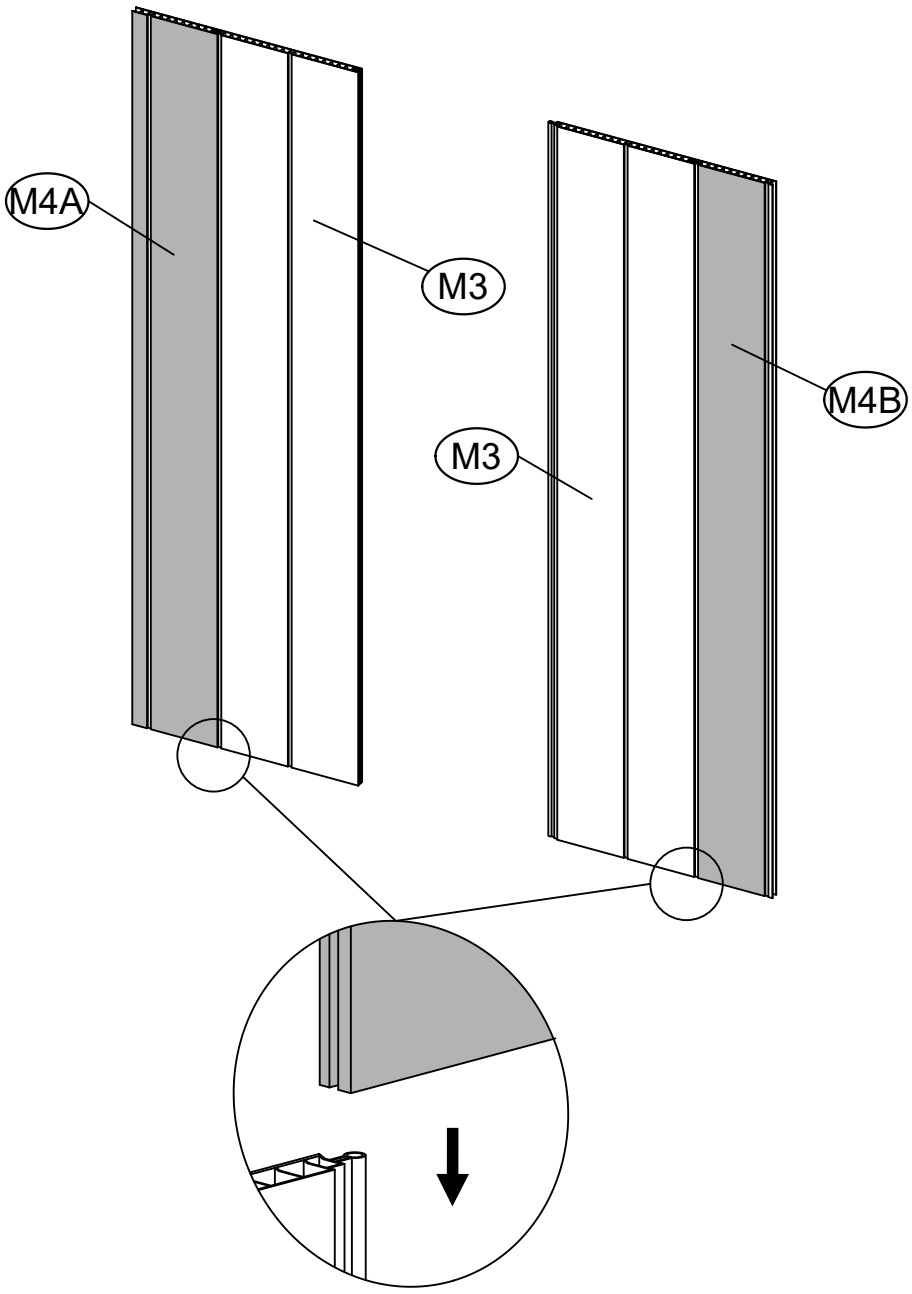

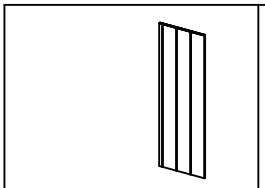

M4A + M3 **1x**

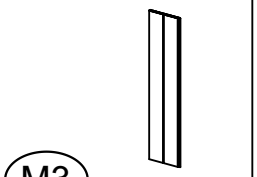

M3 **1x**

**<27>**

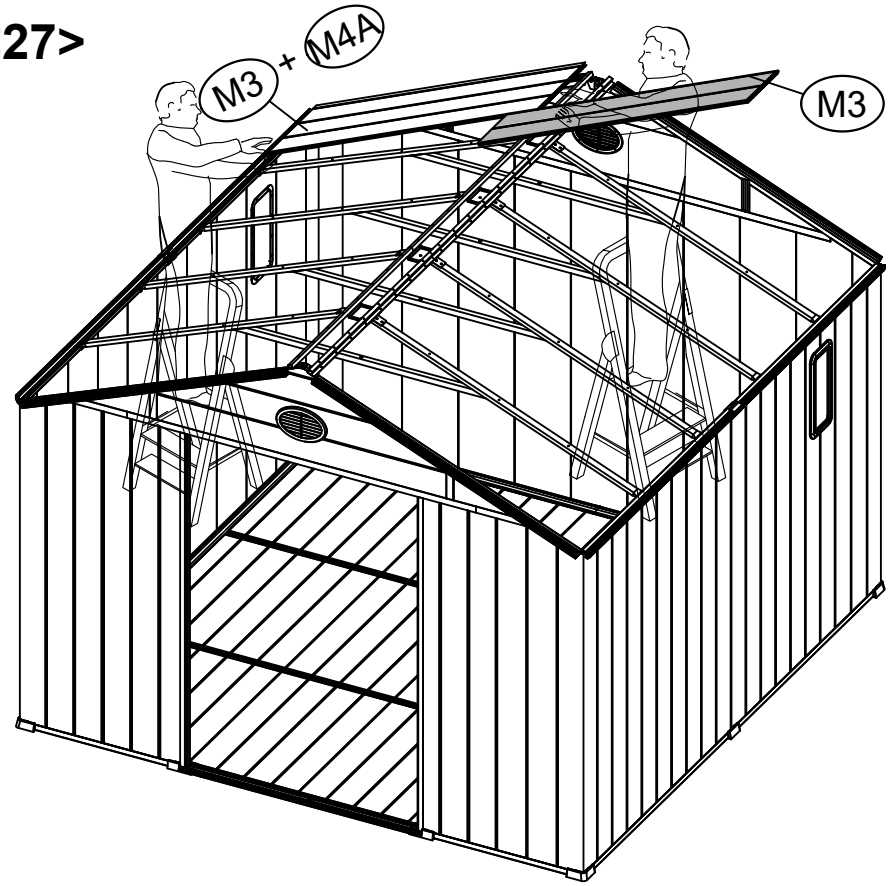


First, align and place components M4 and M3 side by side. Then, with one person inside the storage shed slightly lifting the M3, have another person outside assist in sliding it down along the guide rail.

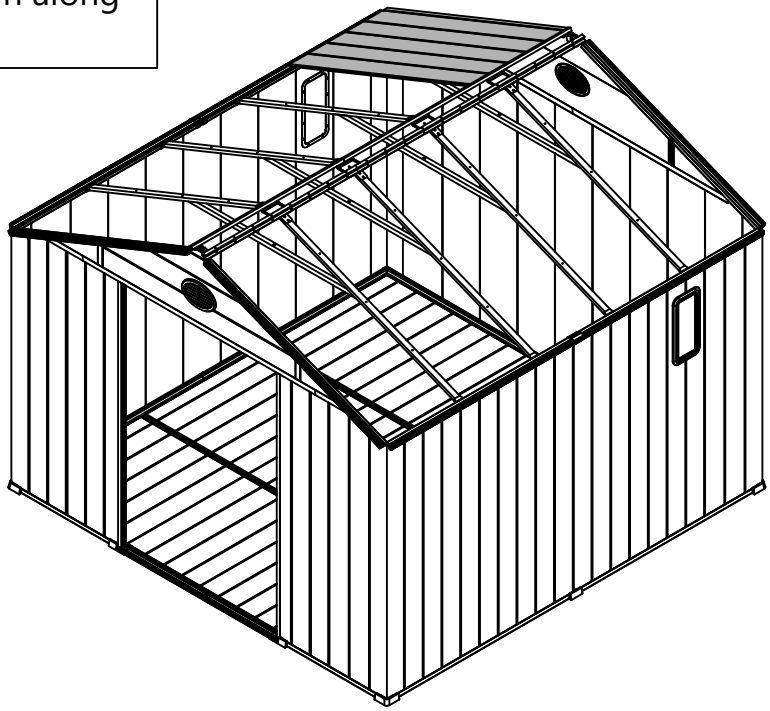

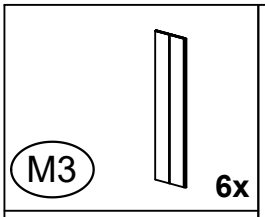


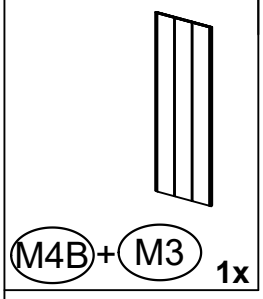


# <28>

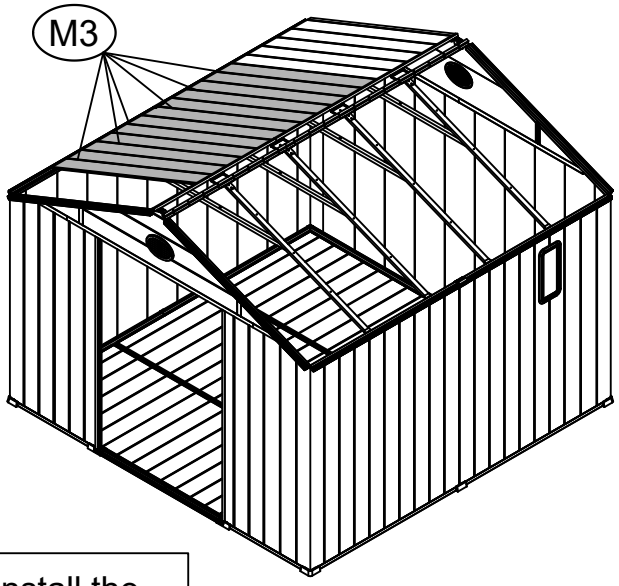


Repeat Step 27 to install the four sets of M3 and combined M3&M4B components.
Note: The top plates may not align perfectly initially. If adjustment is needed, as pictured, have one person stand inside the storage shed and firmly press the corresponding top plate downward until it is level and flush with the adjoining plates.

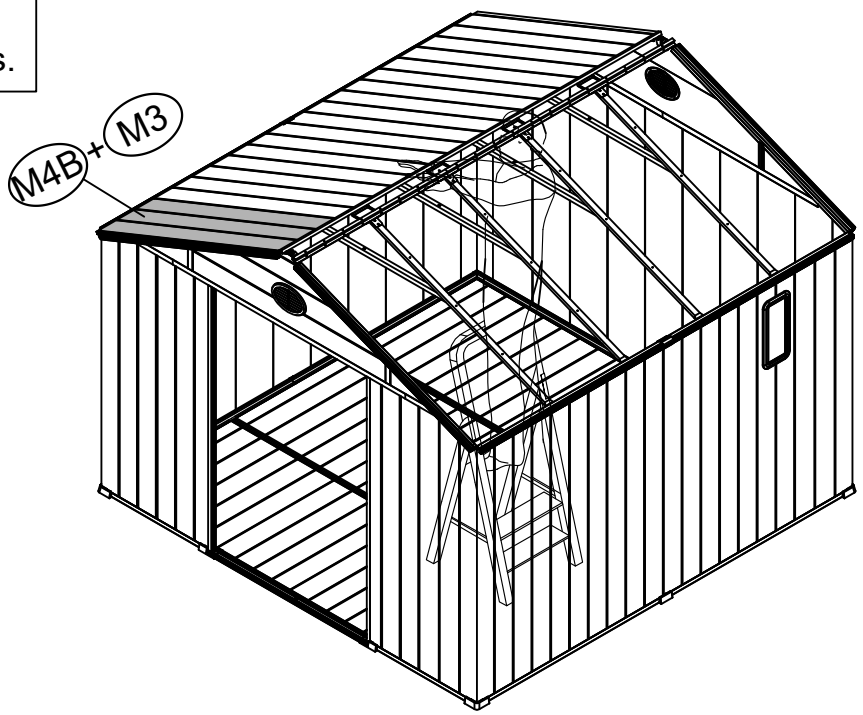

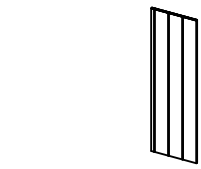

M4A + M3 1x

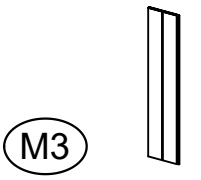

M3 7x

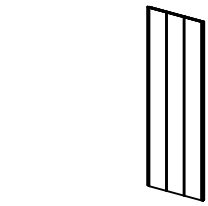

M4B + M3 1x

# <29>

Repeat Steps 27 and 28 to assemble the five sets of components: M3, M3&M4B, and M3&M4A.

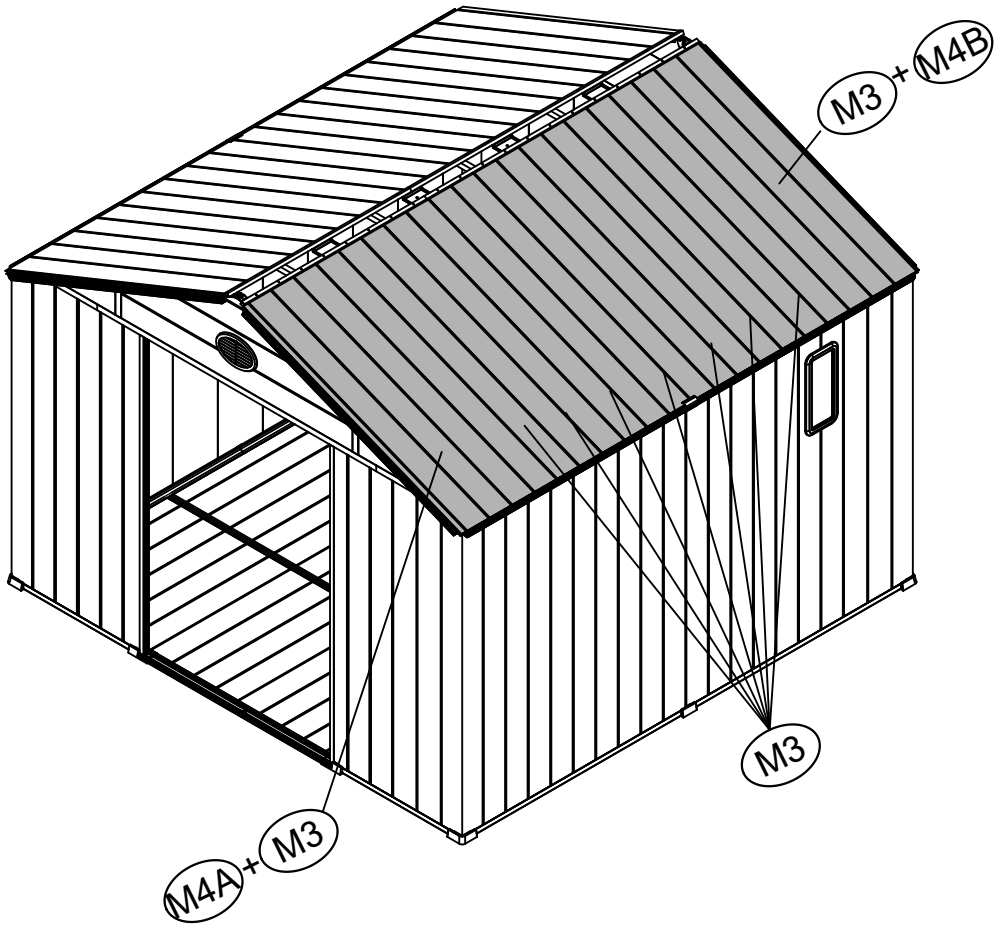



Q2 **2x**



Q8 **1x**

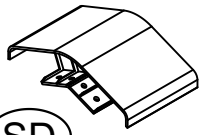

SD **2x**



ST3.8x14

2 **16x**

## <30>

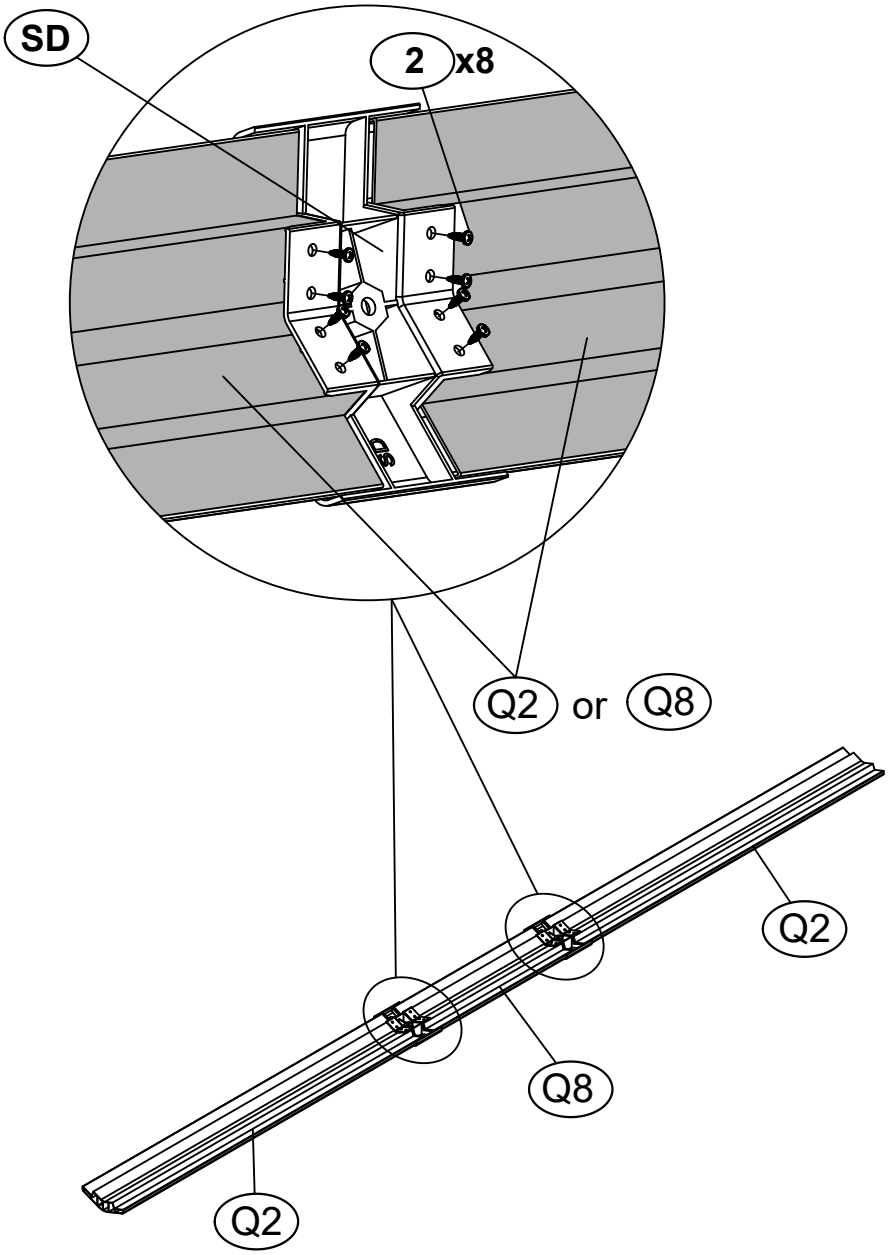

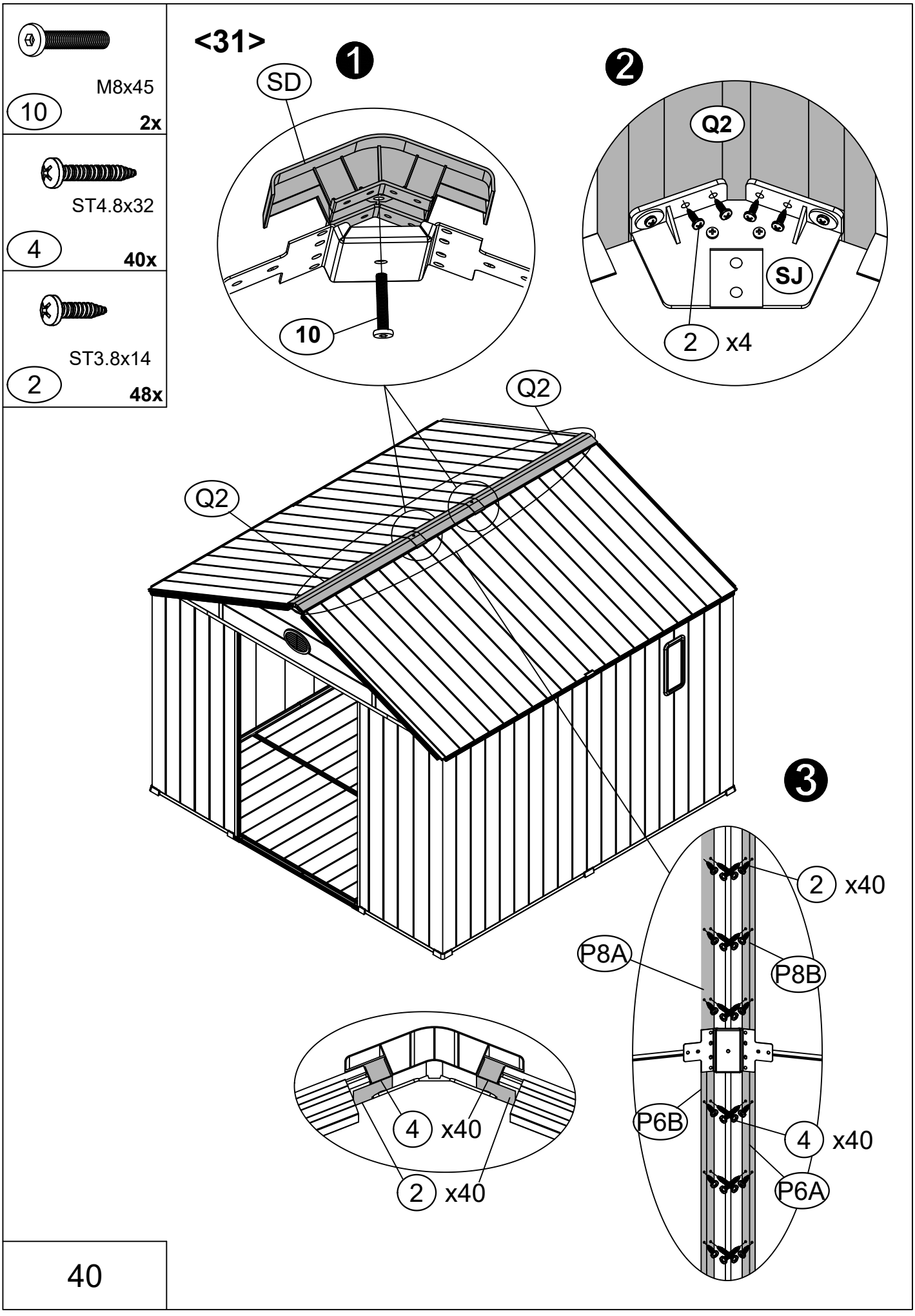
M8x45
10
2x
ST4.8x32
4
40x
ST3.8x14
2
48x
<31>
1
SD
10
2
Q2
SJ
2 x4
Q2
Q2
3
2 x40
P8A
P8B
P6B
4 x40
P6A
4 x40
2 x40

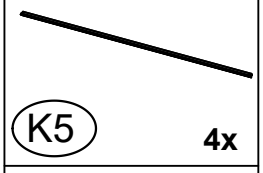

K5 **4x**



W3 **4x**



ST4.8x32

4 **36x**

## <32>

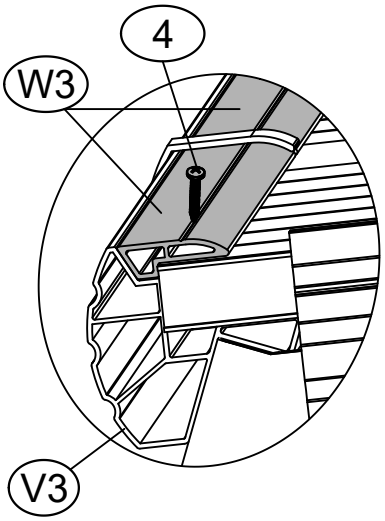


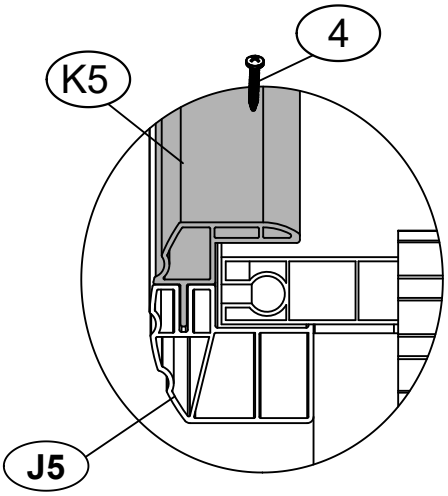


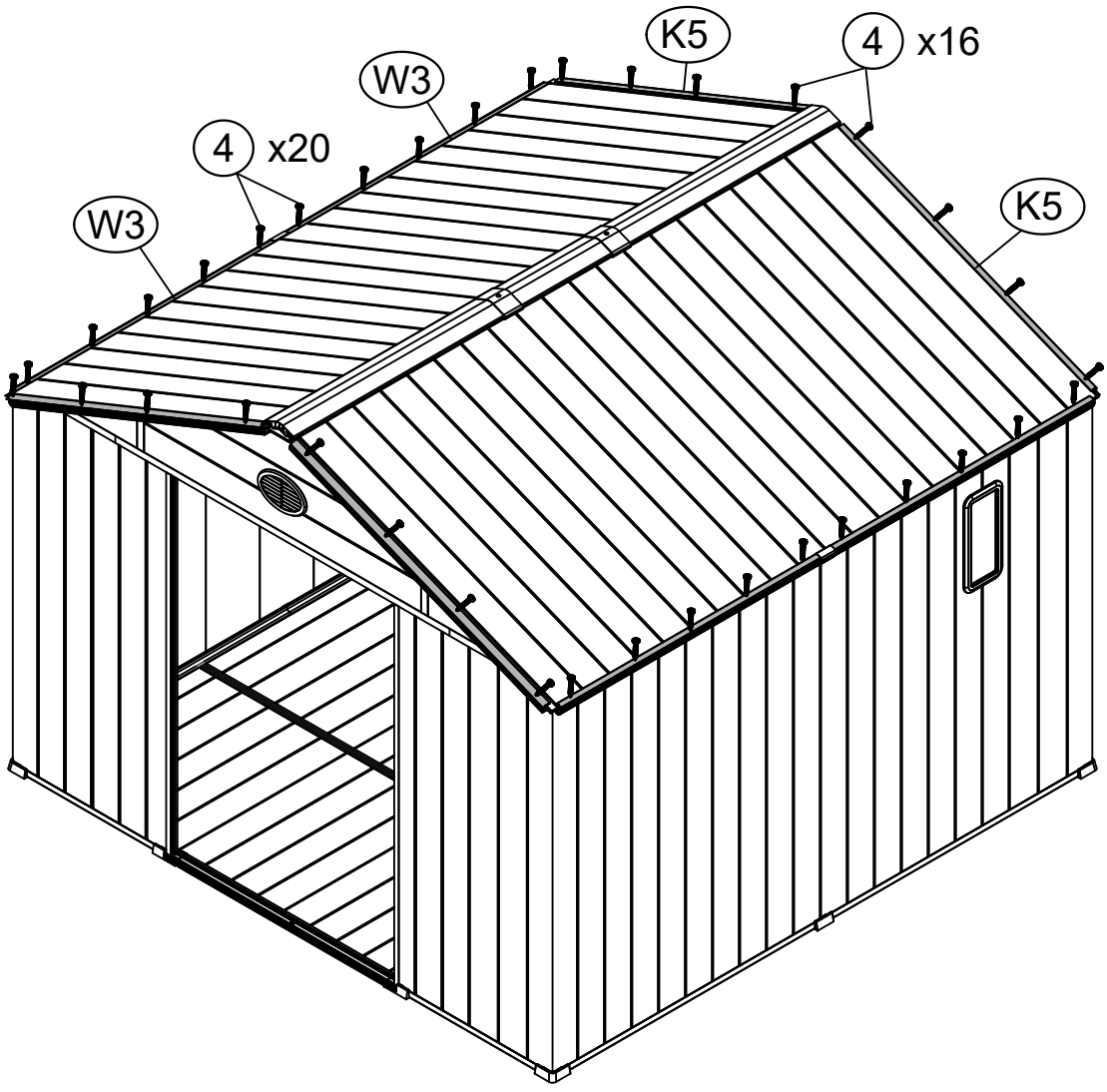

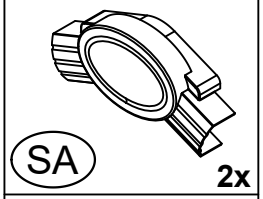

SA **2x**

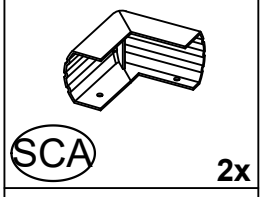

SCA **2x**

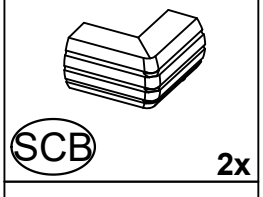

SCB **2x**



ST3.8x14

2 **24x**

# <33>

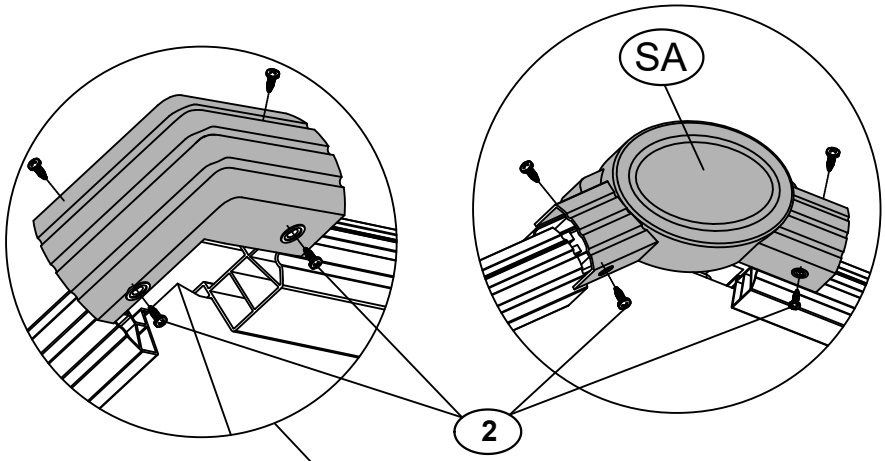

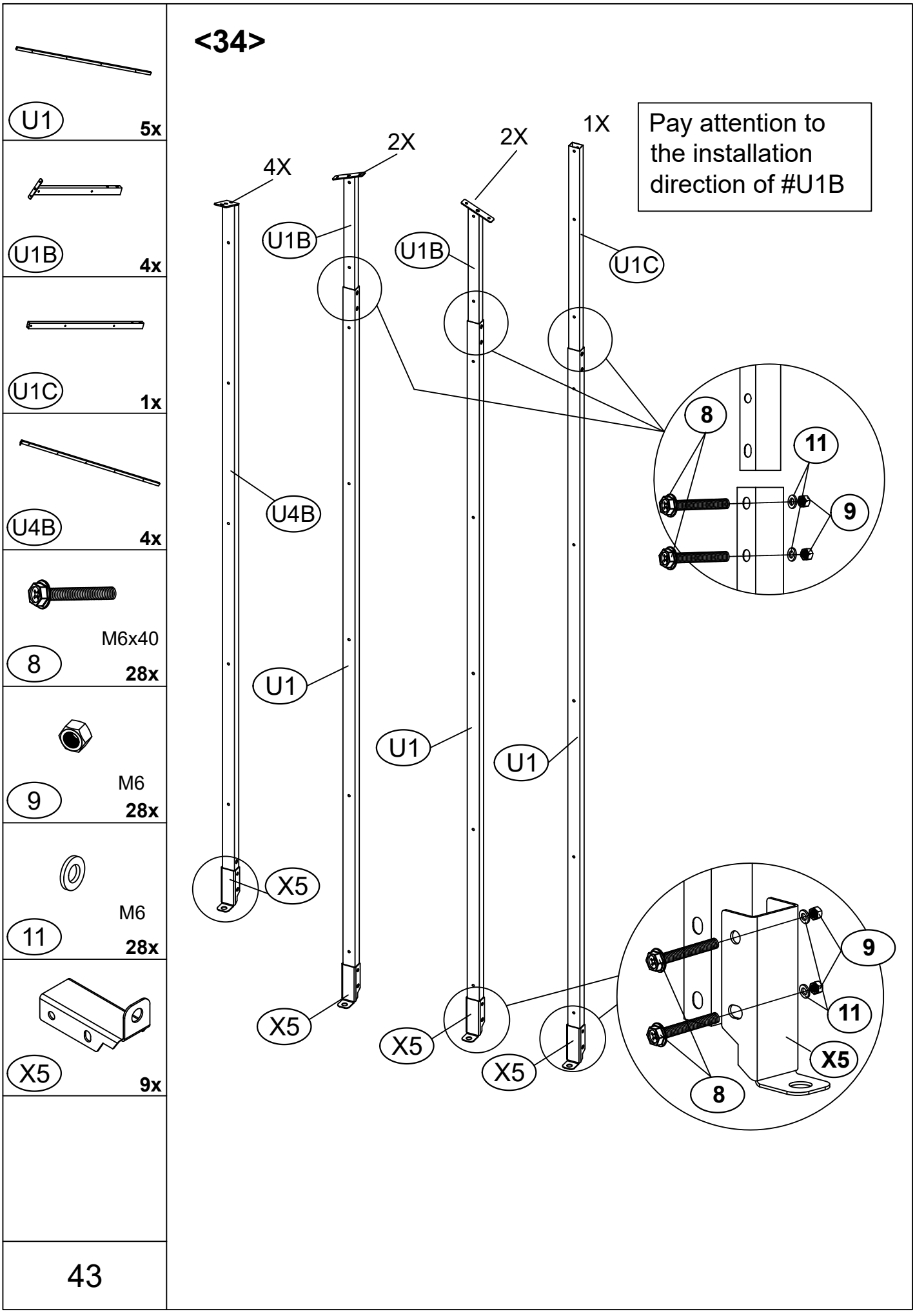
<34>
U1
5x
U1B
4x
U1C
1x
U4B
4x
M6x40
8
28x
M6
9
28x
M6
11
28x
X5
9x
4X
2X
2X
1X
U1B
U1B
U1C
U4B
U1
U1
U1
X5
X5
X5
X5
Pay attention to the installation direction of #U1B
8
11
9
9
11
X5
8

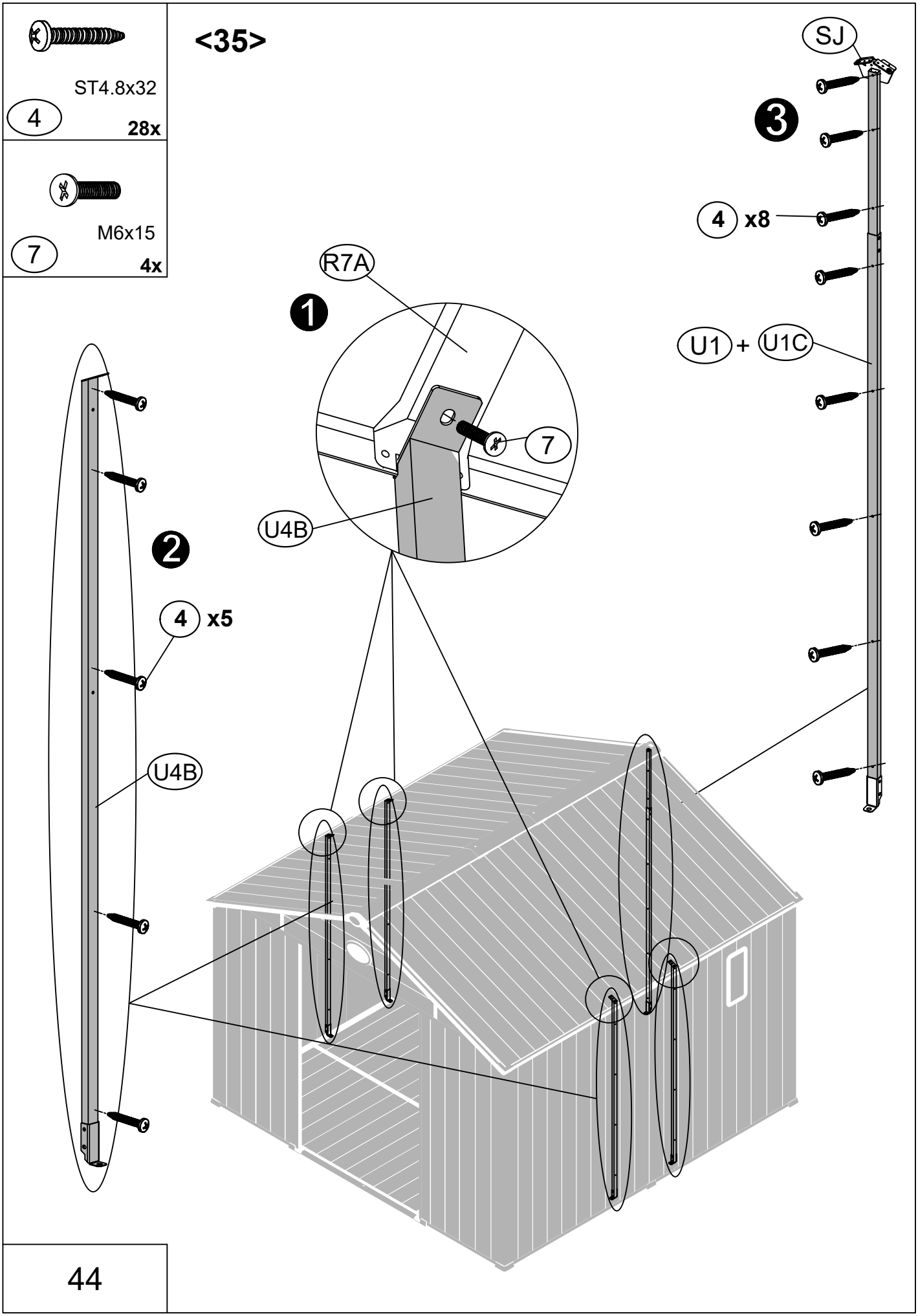
<35>
ST4.8x32
4
28x
M6x15
7
4x
SJ
3
4 x8
R7A
1
U1 + U1C
7
U4B
2
4 x5
U4B



ST3.8x14

2 **8x**



ST4.8x32

4 **40x**

# <36>

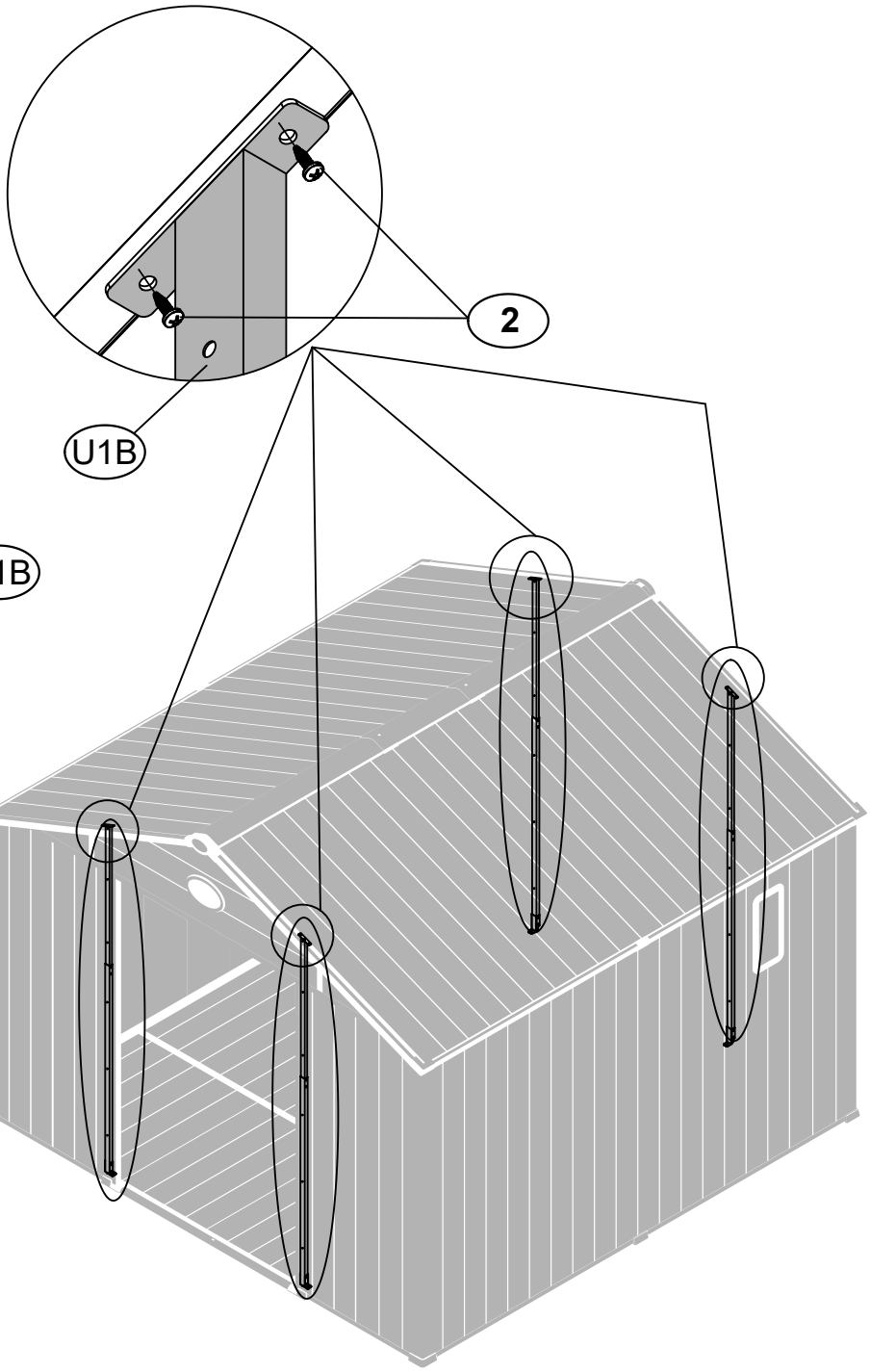


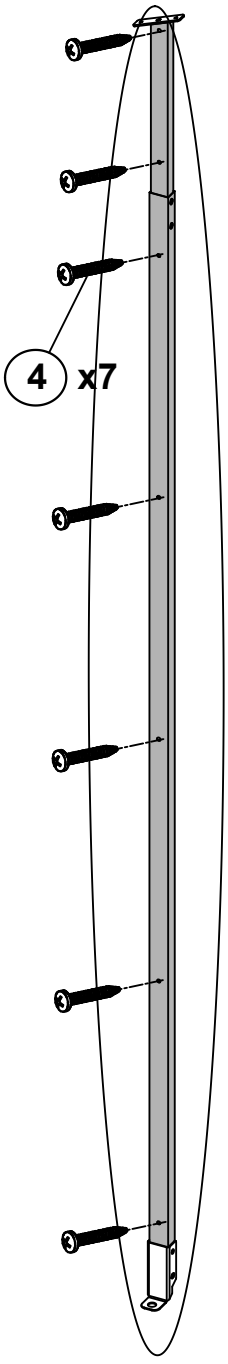

U1 + U1B

4 **x7**



X11

**4x**



ST4.8x32

4

**24x**

# <37>

If a depression forms on the tool room roof, it can be raised by rotating component X11.

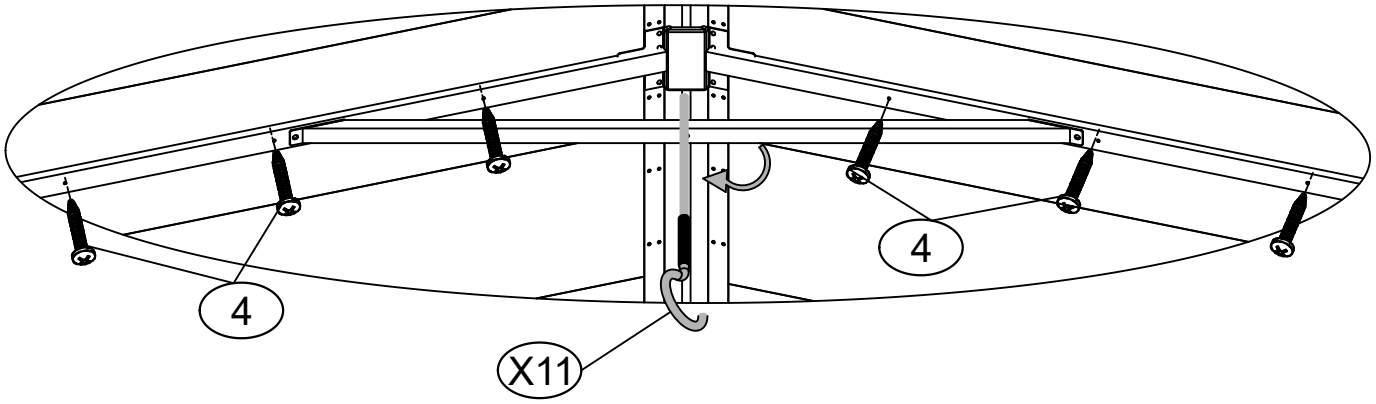


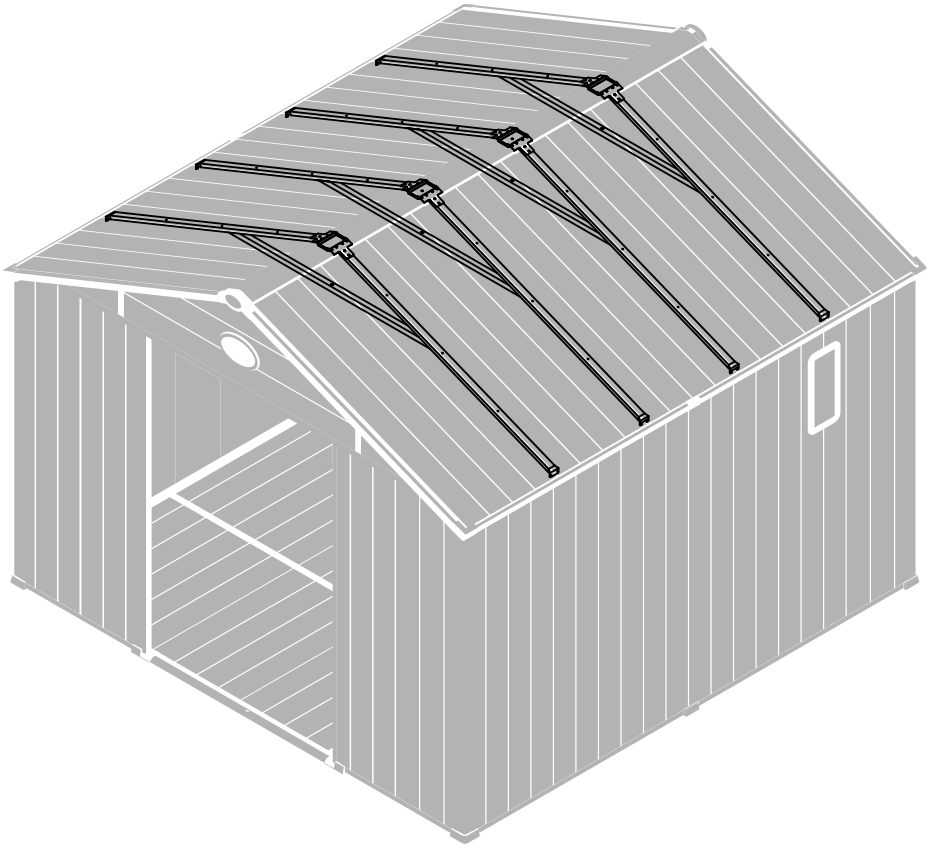

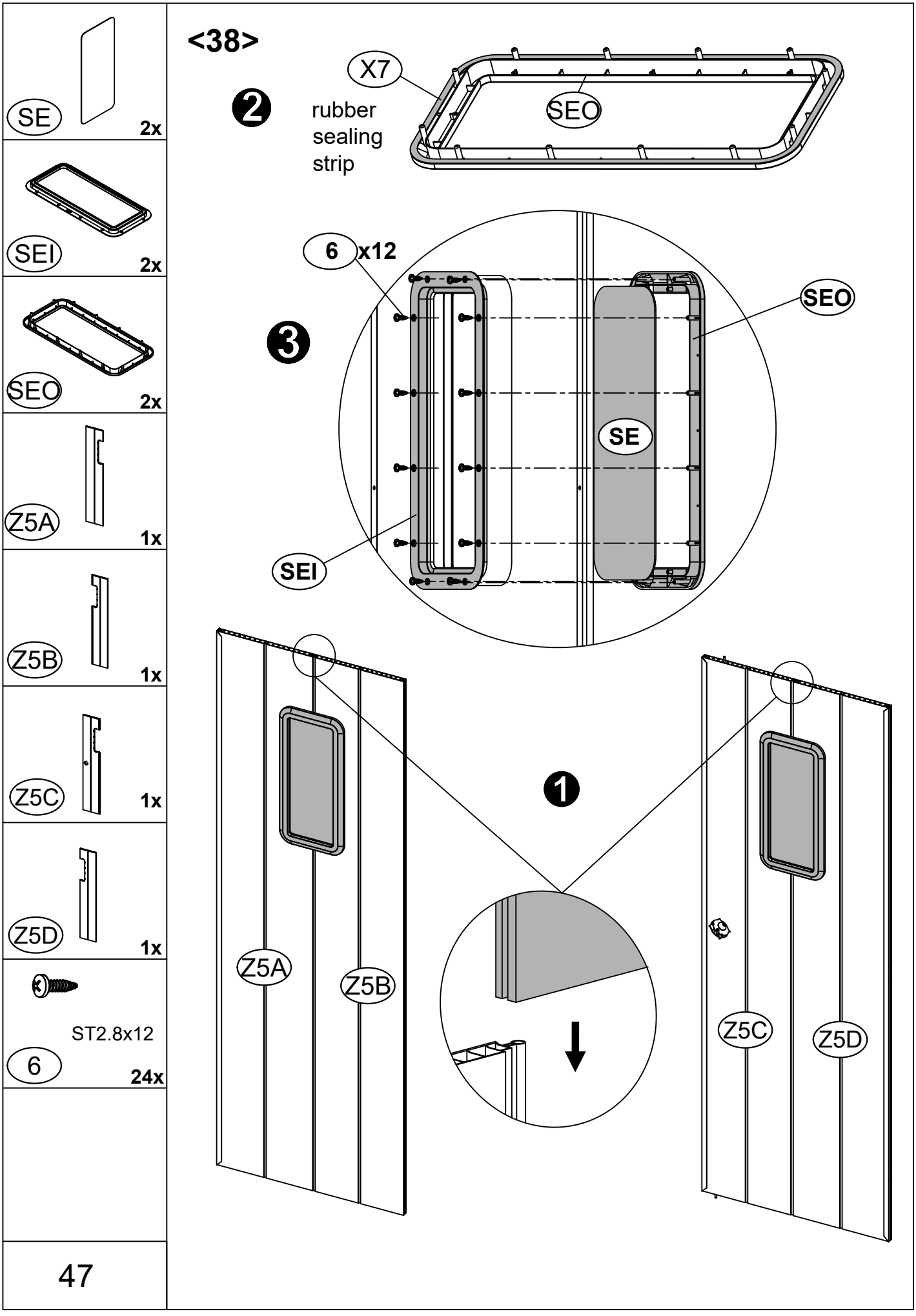
<38>
SE
2x
SEI
2x
SEO
2x
Z5A
1x
Z5B
1x
Z5C
1x
Z5D
1x
ST2.8x12
6
24x
2
X7
rubber
sealing
strip
SEO
3
6 x12
SEO
SE
SEI
1
Z5A
Z5B
Z5C
Z5D
47

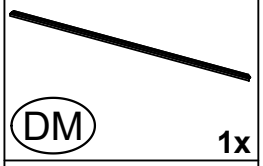

DM 1x

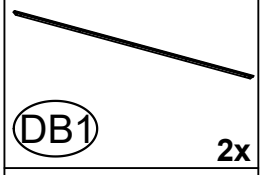

DB1 2x

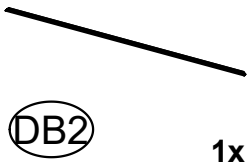

DB2 1x

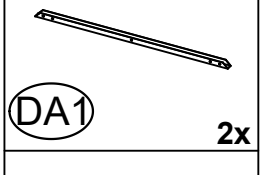

DA1 2x

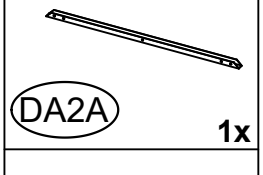

DA2A 1x

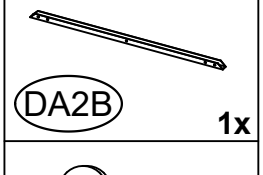

DA2B 1x

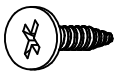

ST3.8x12

1 48x

## <39>

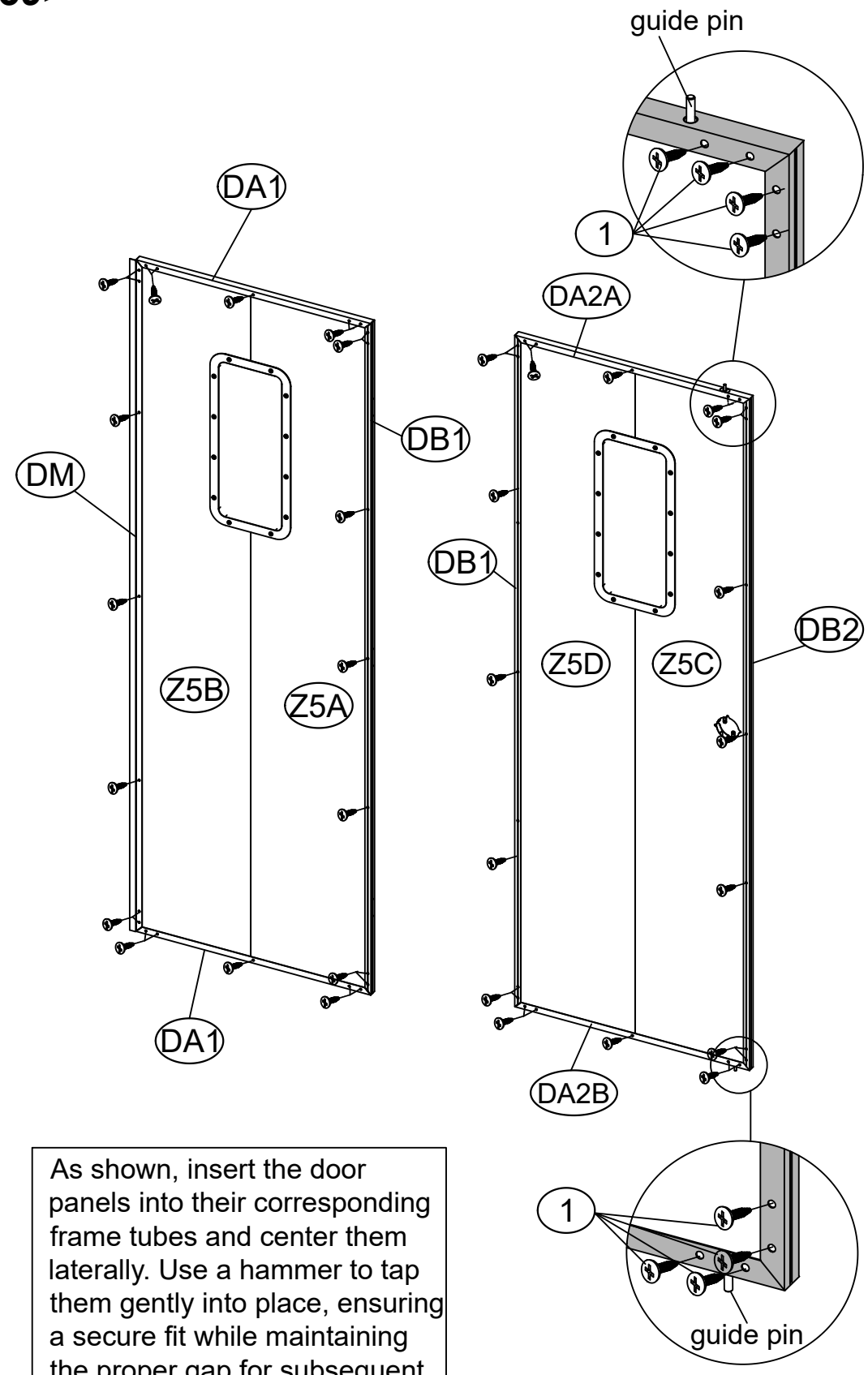


As shown, insert the door panels into their corresponding frame tubes and center them laterally. Use a hammer to tap them gently into place, ensuring a secure fit while maintaining the proper gap for subsequent door installation. Then, secure them with #1 screws.



SK **1x**



ST2.8x12

6 **6x**



X3 **1x**

## <40>

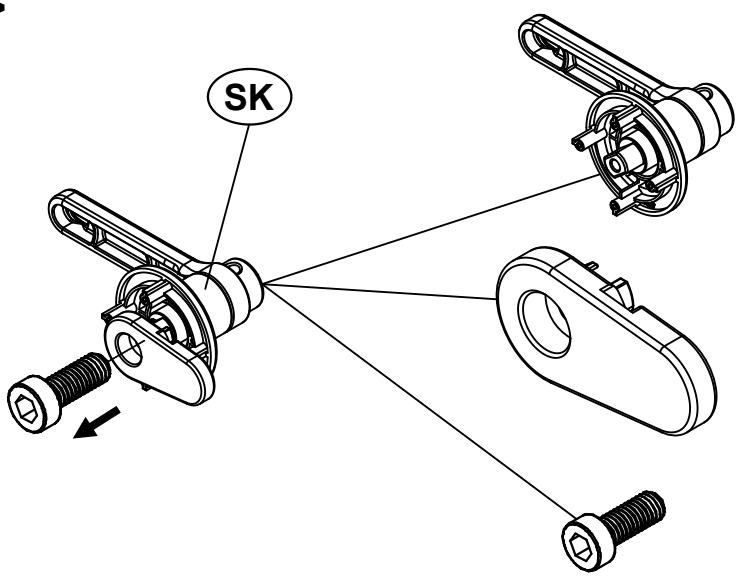


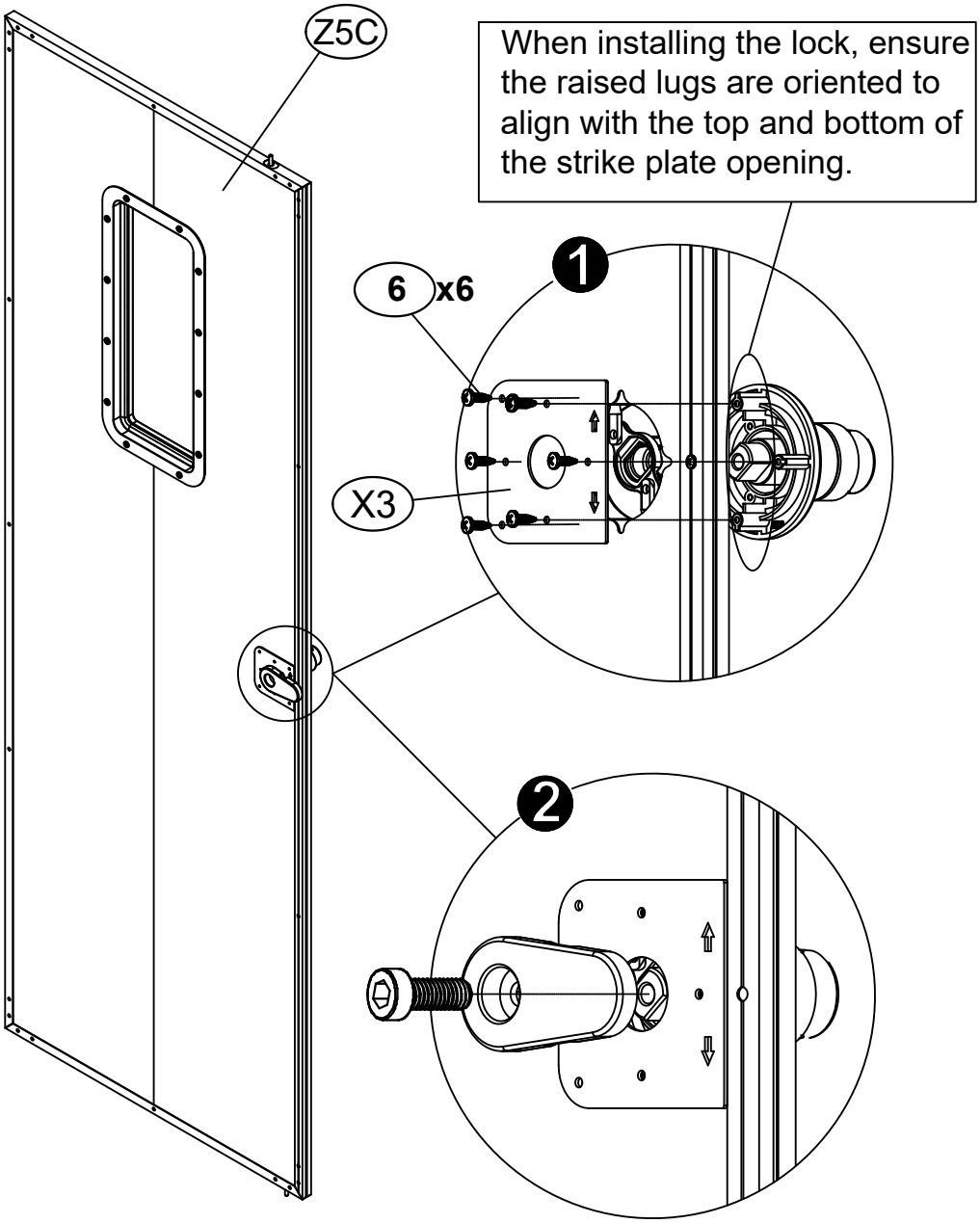

**<41>**

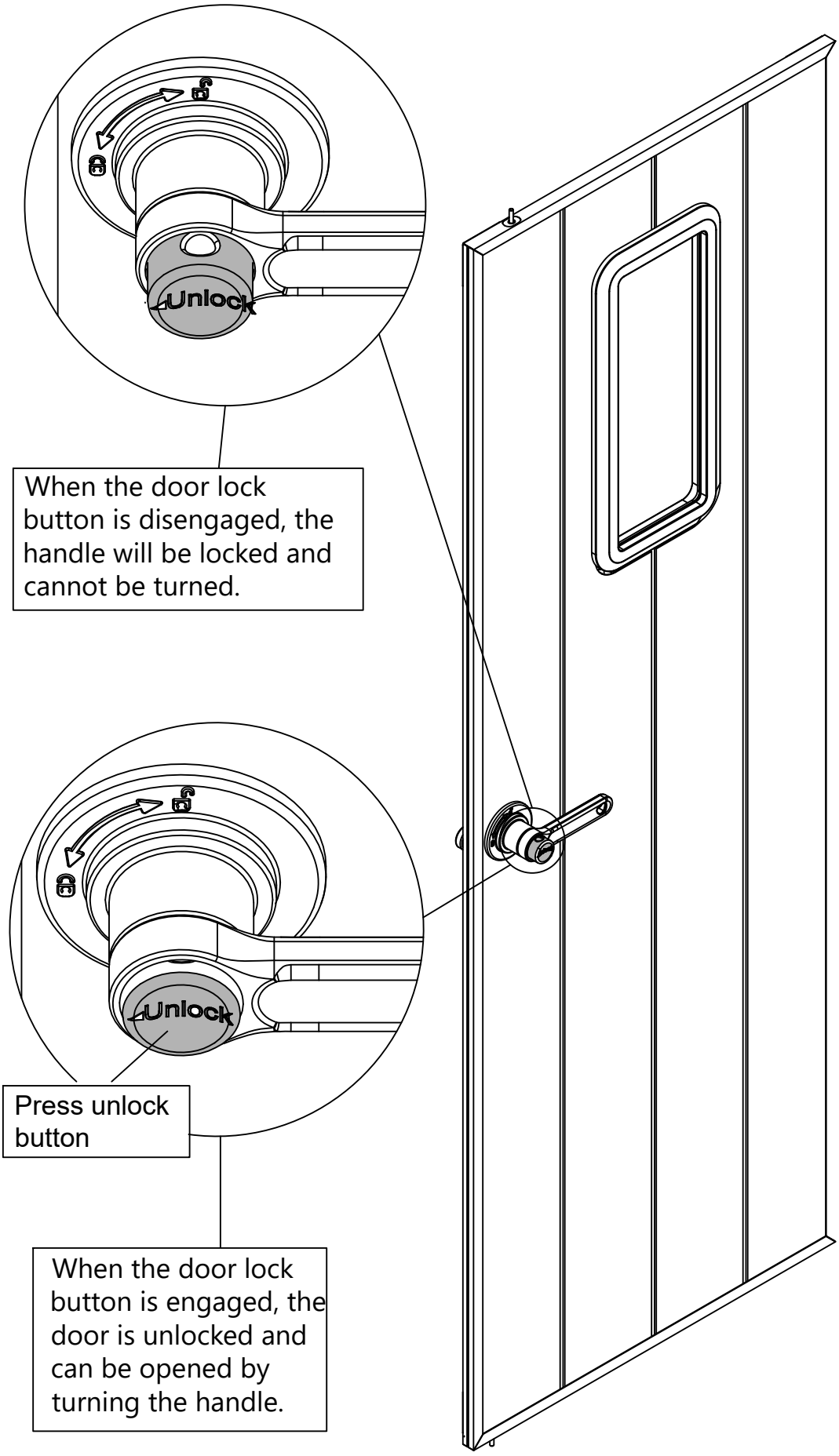
Unlock
When the door lock button is disengaged, the handle will be locked and cannot be turned.
Unlock
Press unlock button
When the door lock button is engaged, the door is unlocked and can be opened by turning the handle.



ST3.8x12

3

**12x**



X2

**6x**

# <42>

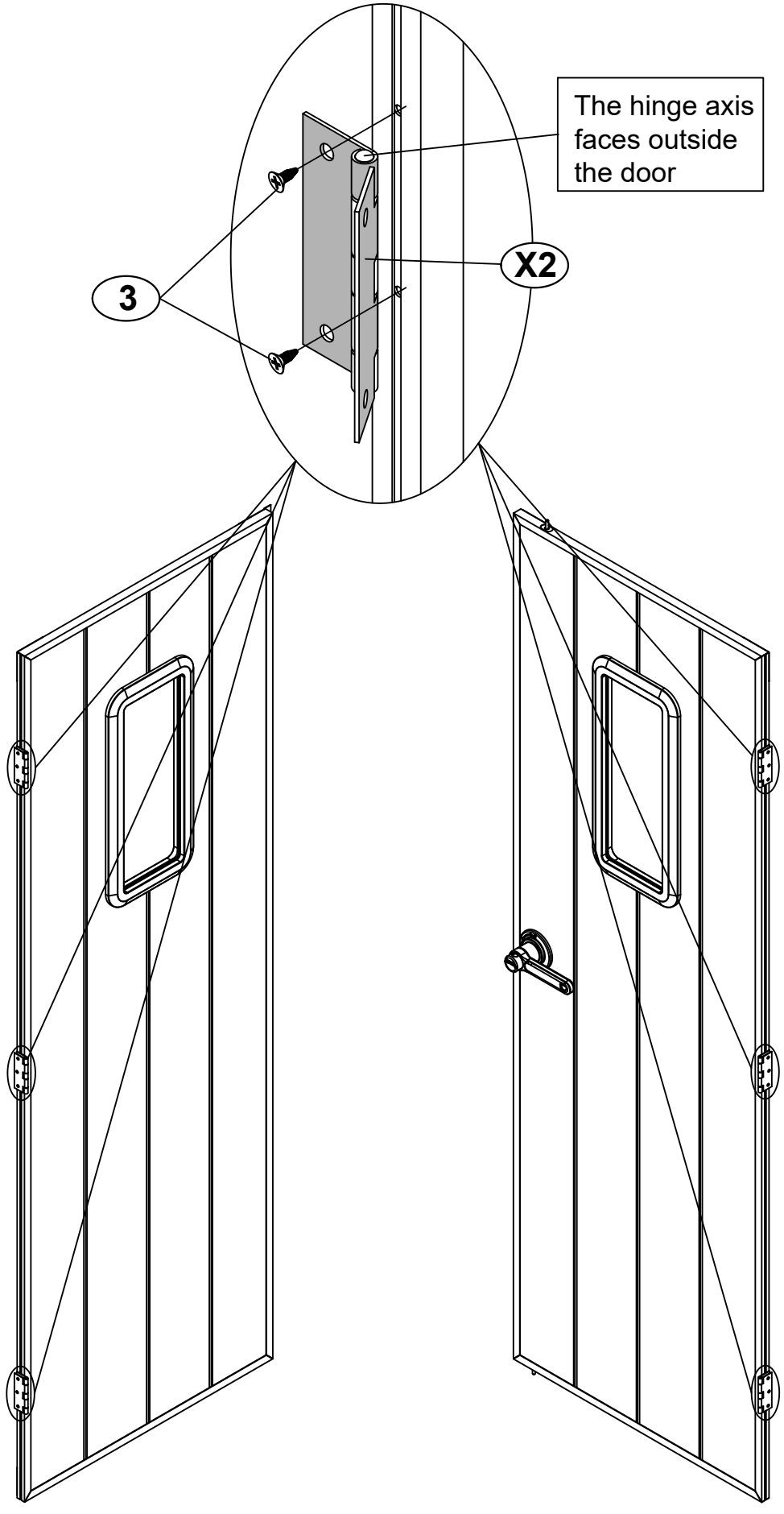



ST3.8x12

3

**12x**

# <43>

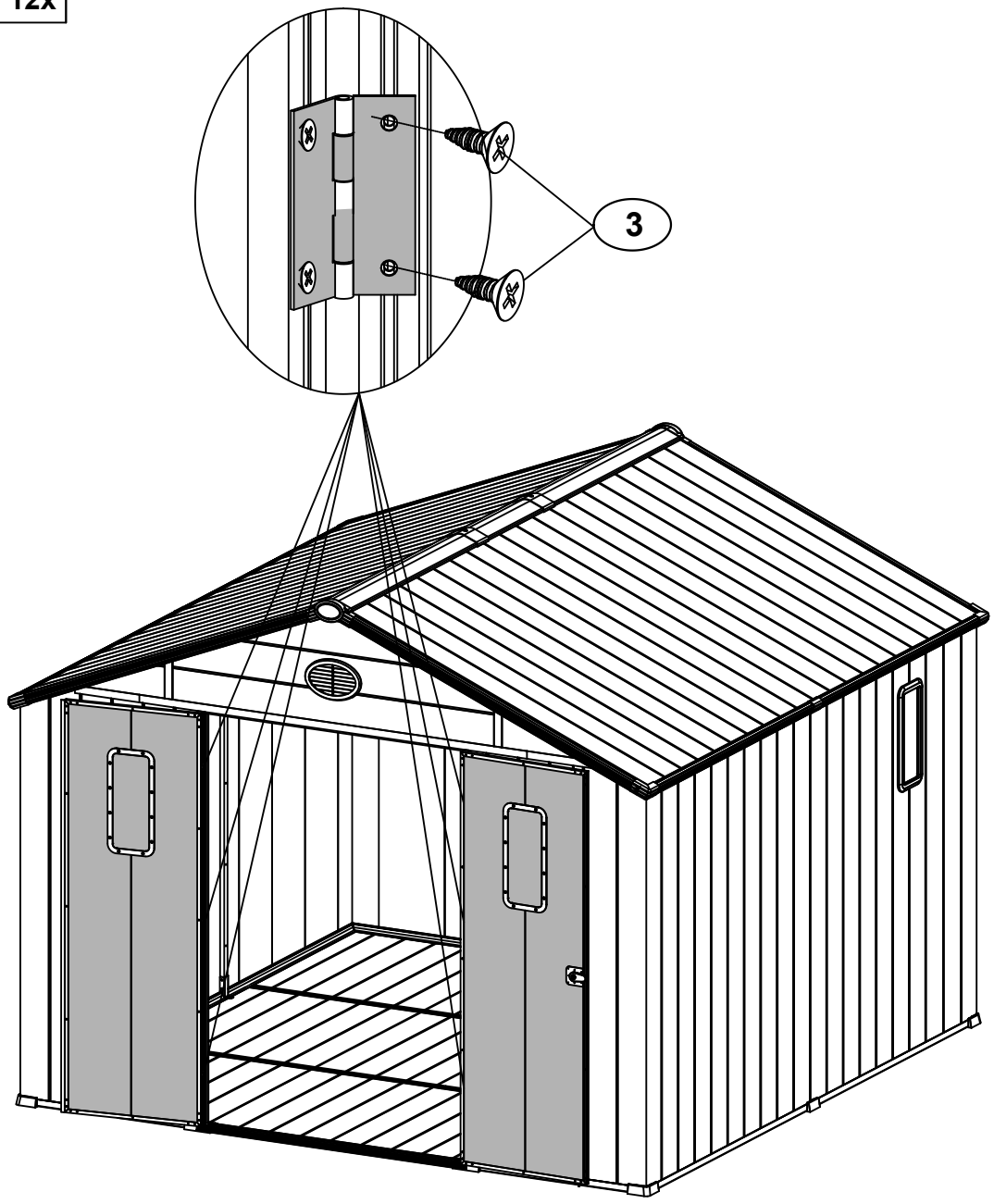

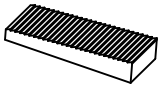

SP 2x

## <44>

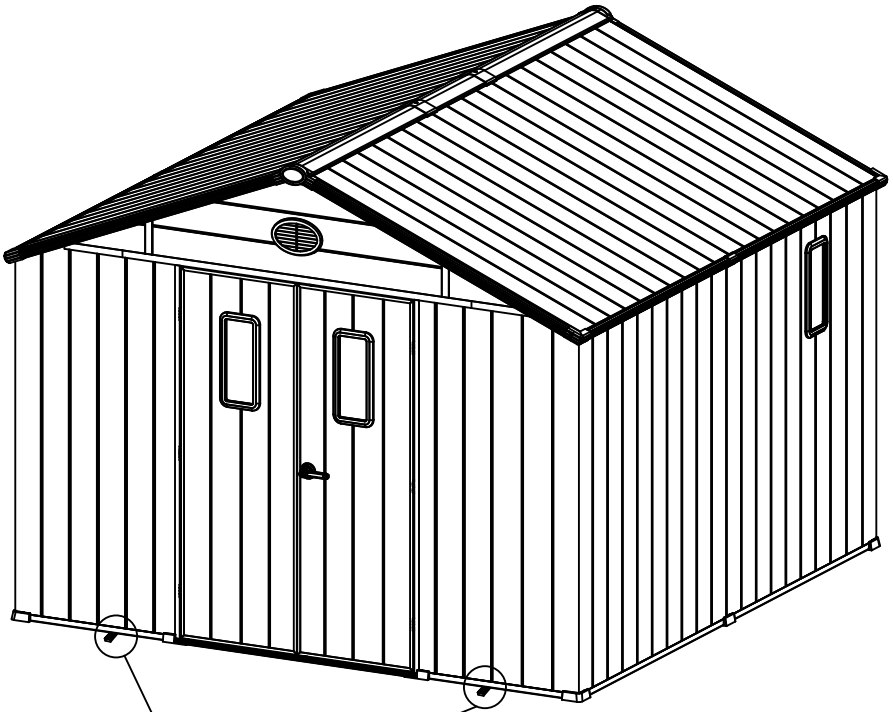

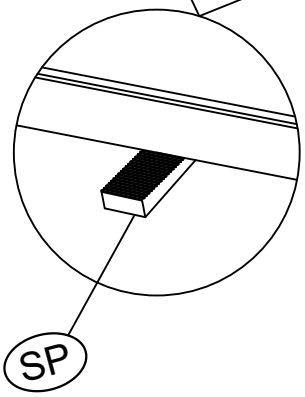


If the assembled rear door frame is tilted, the #SP# part can be placed on the left or right side of the tool house as shown.

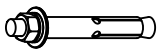

M8x80

12

**9x**

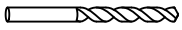

Y3

**1x**

# <45>

An electric drill (not included) is required for drilling.

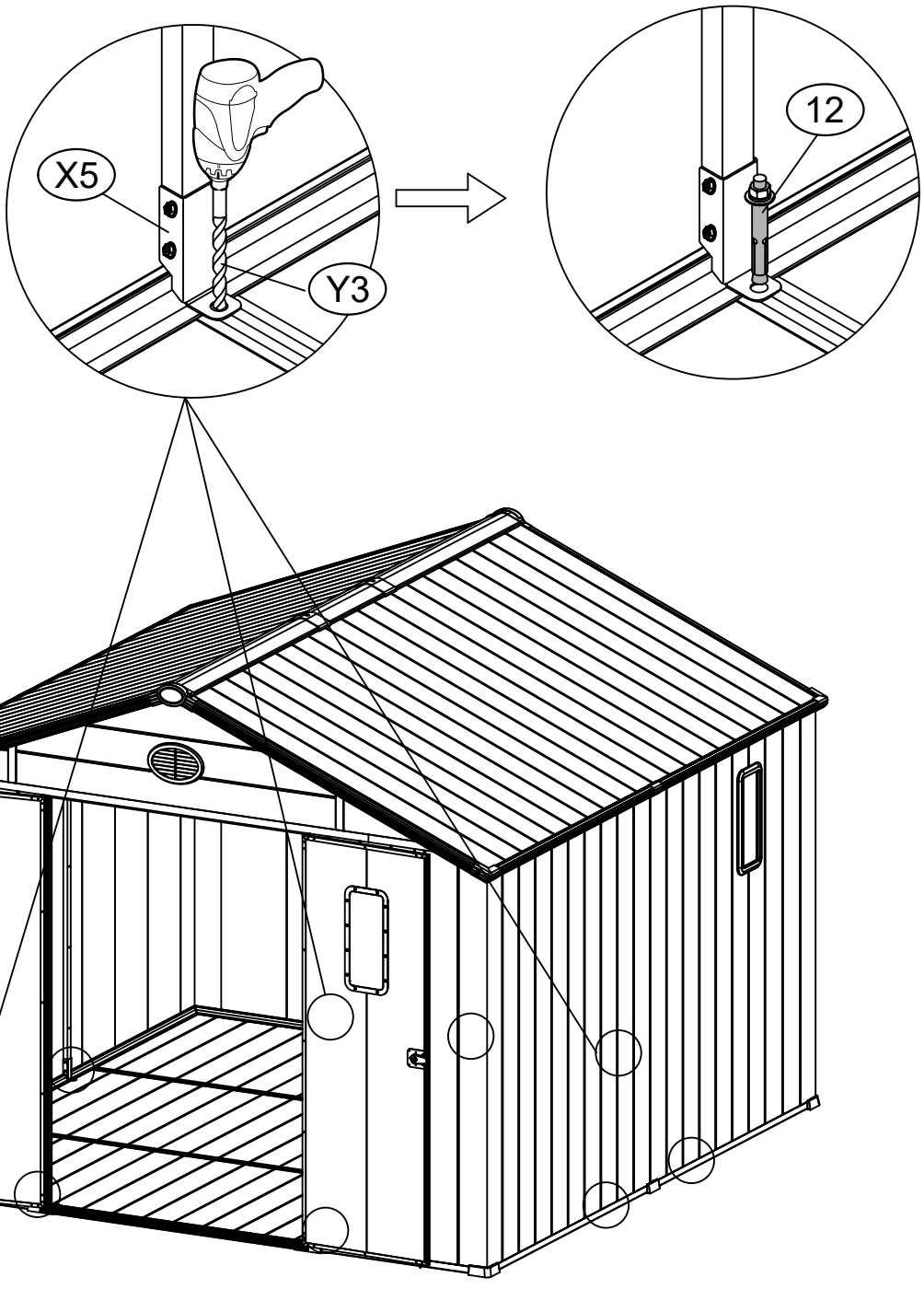

# AFTER-SALE SERVICE

If you have any suggestions for our products or find that the products have quality problems, please contact us first, our after-sales team will reply you within 24 hours, and we will do our best to give you solutions until you are satisfied.

## Guaranteed Customer Service

Your shopping experience is very important to us!
Feel unsatisfied? **Contact us!**
Have any questions? **Contact us!**

Wanna share your experience with our products?
Share your pictures with us.

Any suggestions? **Contact us!**
We gotcha back!