ASSEMBLY INSTRUCTION FOR

MODEL: EXT DINING

Thank you for purchasing this product. Be sure to check all packing material carefully for small Hardware which may have come loose inside the carton during shipment. Identify and count all hardware and compare with the hardware list below

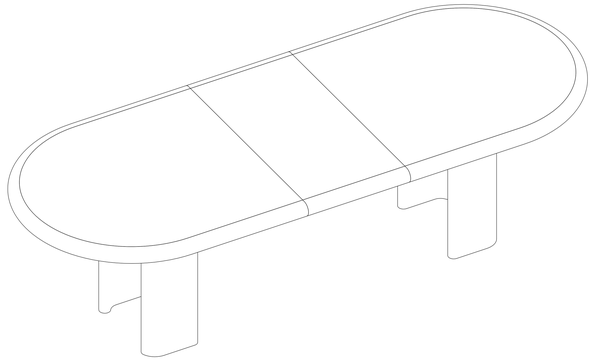

HARDWARE LIST

A	Bolt	8 x 55mm	8
B	Bolt	8x 45mm	4
C	Flat Washer	8 x 19mm	12
D	Allen Wrench	4mm	1

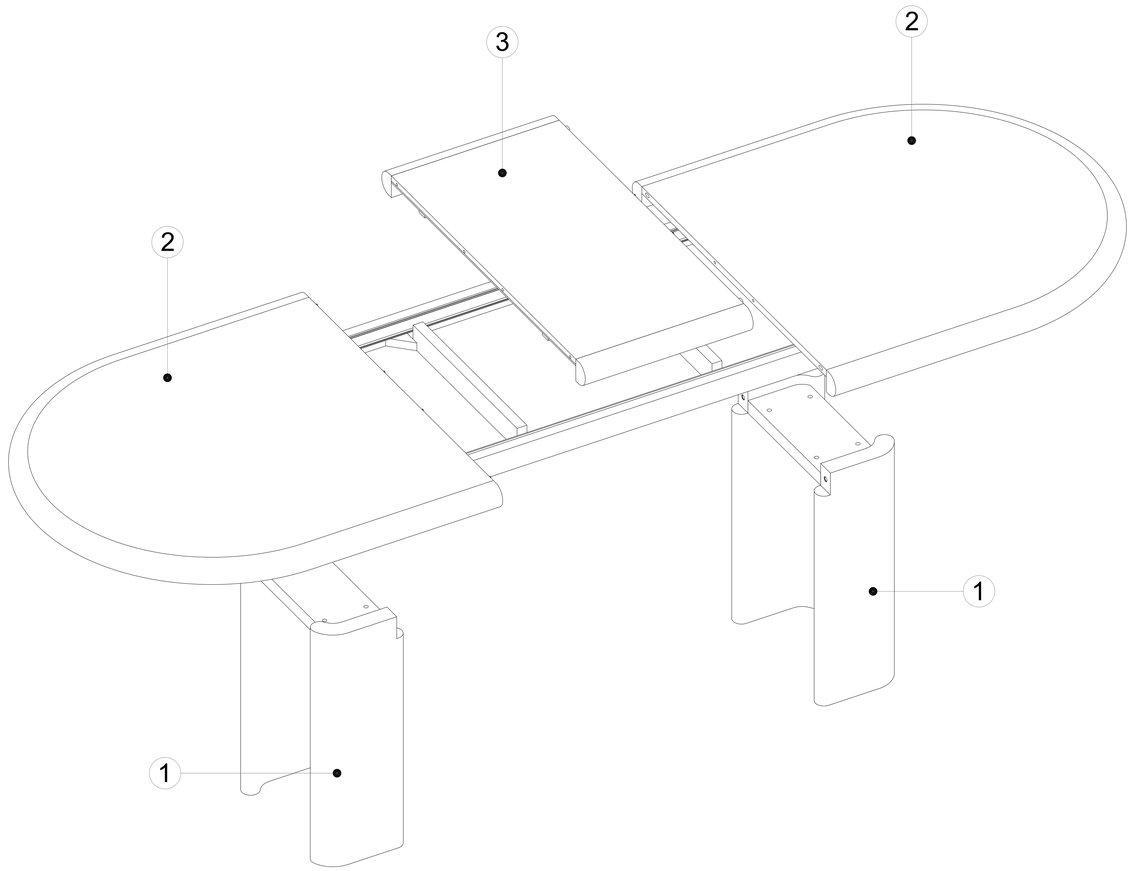

MADE IN VIET NAM

Step 1

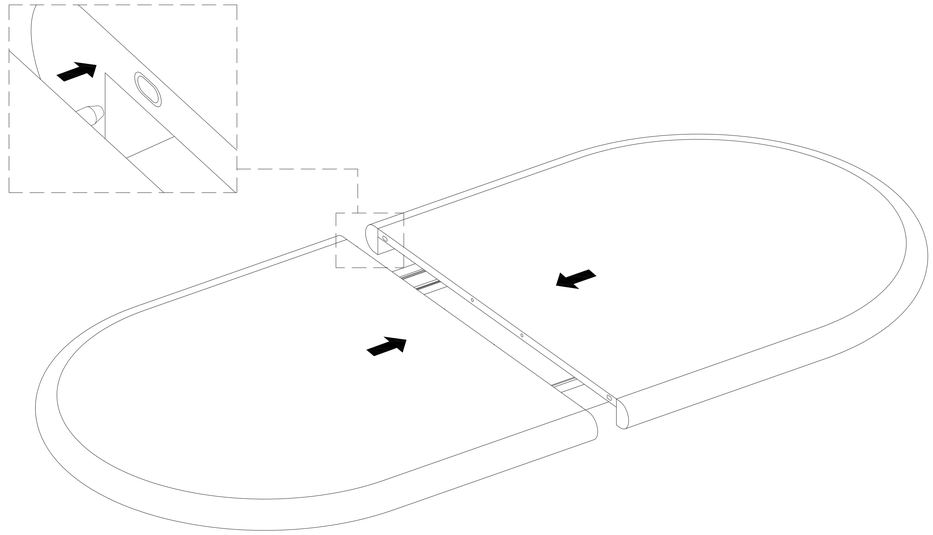

Step 2

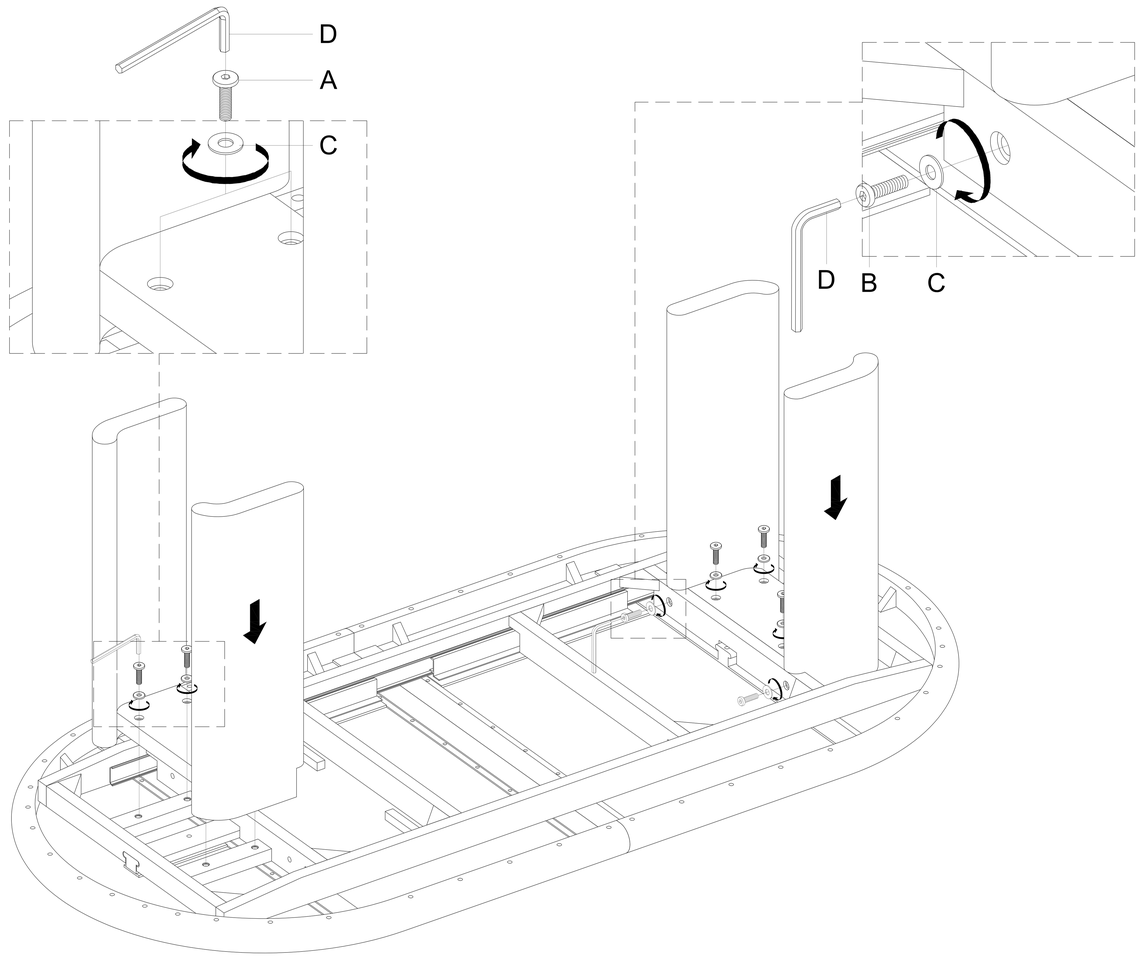

Step 3

Option 1

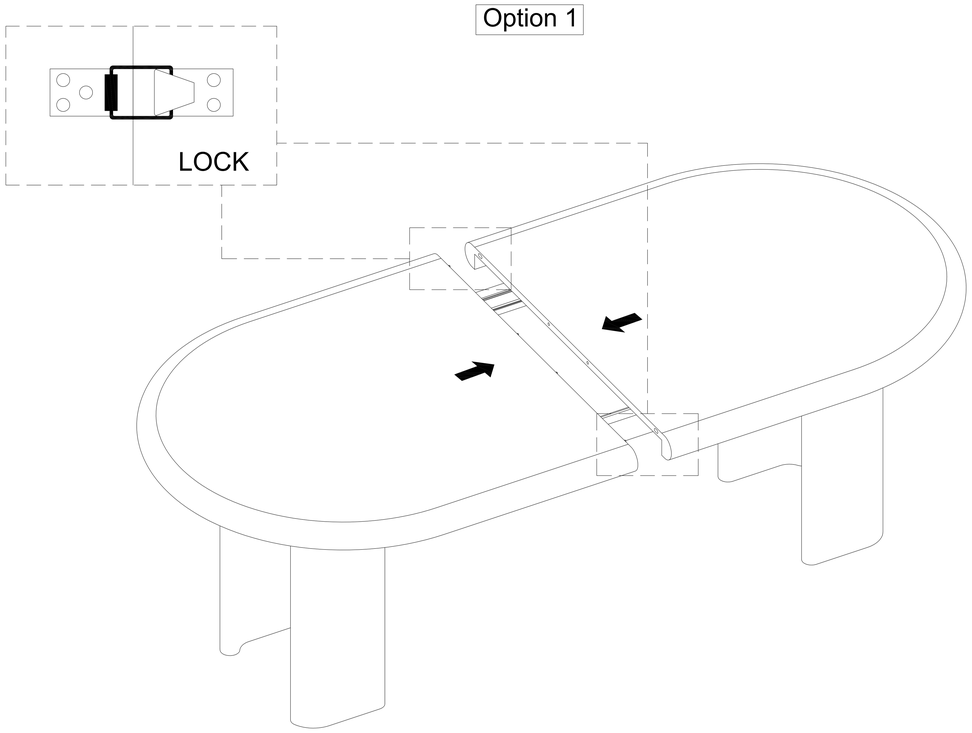

Option 2

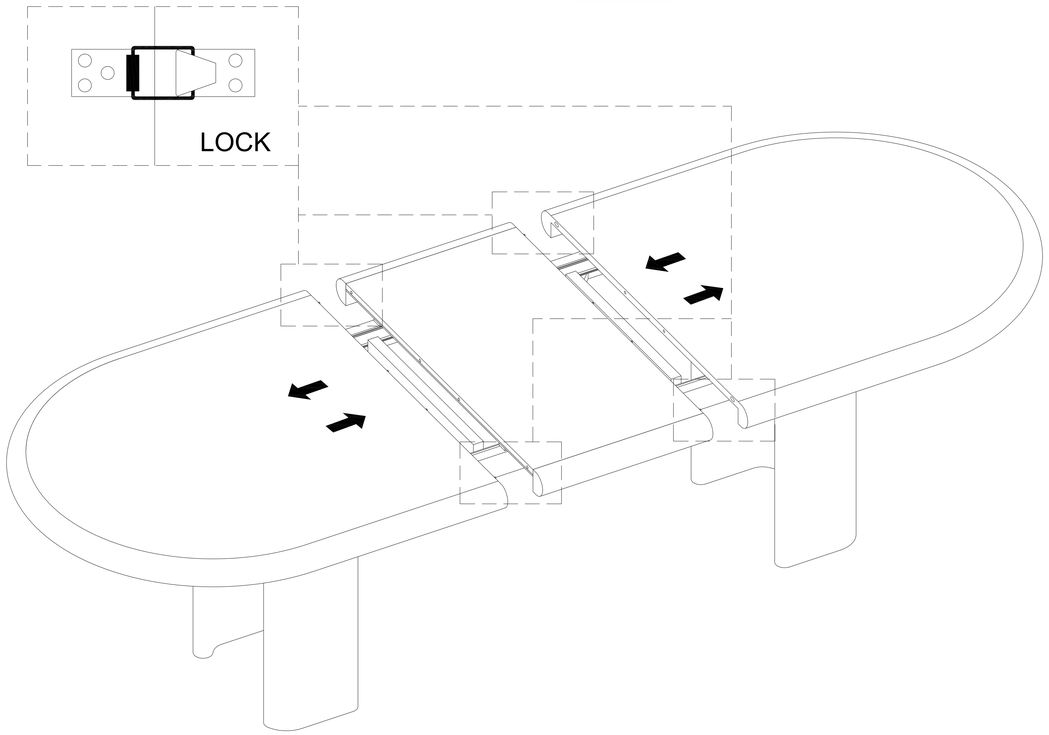

MADE IN VIET NAM

Step 4

Option 1

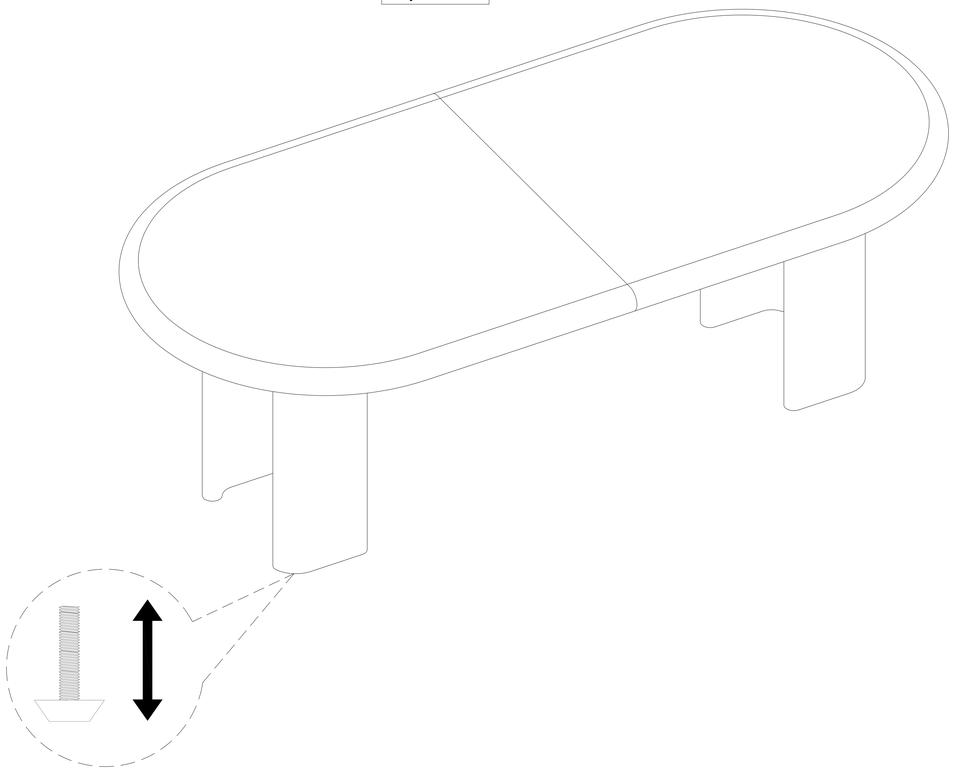
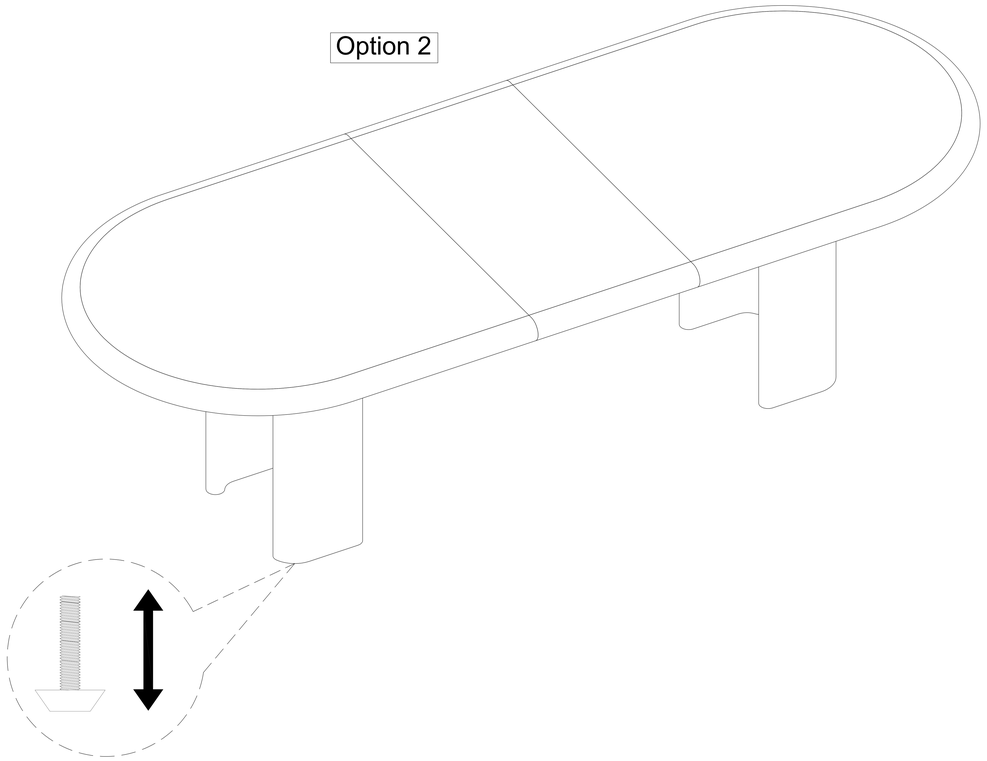
Option 2