WINGYZ

⚠ WARNING:
Adult assembly required

Assembly and User Instructions

NOTE : Please read the instructions before assembly.
Keep small parts away from children during assembly.
Incorrect assembly could potentially create a hazard!!!

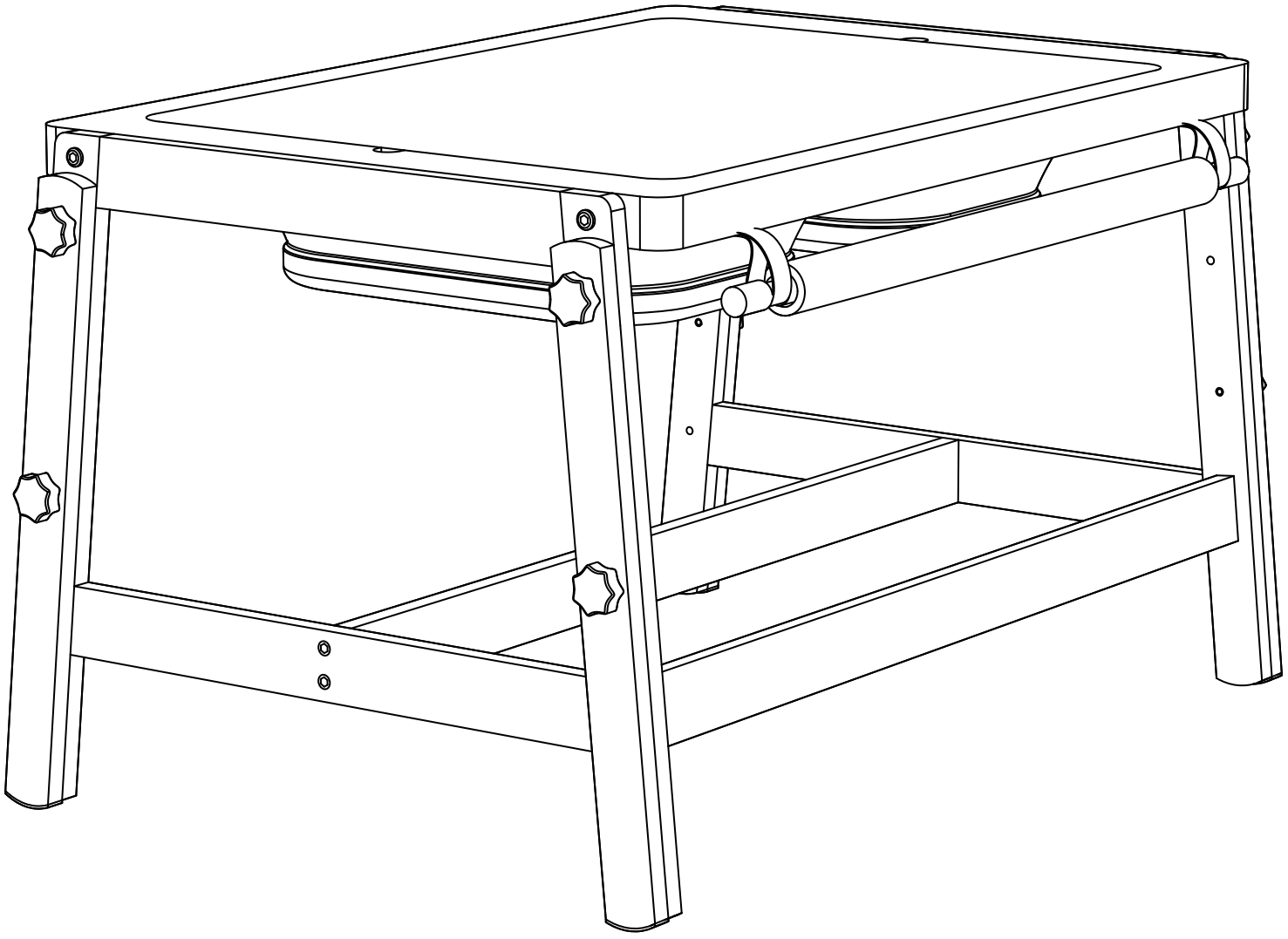

Product Description	Height-Adjustable Double Table

For indoor use

WINGYZ

NOTE:

1. Always use a soft surface (such as carpet or cardboard) when assembling your product to avoid scratching or damaging the surface of the product.
2. This product only includes a hex wrench,the electric screwdriver not include.If an electric screwdriver is used for installation, the torque of the electric screwdriver should be adjusted to a low setting to prevent excessive torque from damaging the product.
3. Before installation, please carefully check whether there is any sawdust left in the holes of each plate.If there is any sawdust, please clean it up in time to avoid affecting the subsequent installation.
4. If it seems parts aren't fitting together you likely have something wrong and you should reread the instructions to ensure you are aligning the proper components.
5. When assembling the product, do not tighten the screws all the way at the first, tighten them to 70% , and then once all the screws are assembled, tighten them to 95%.

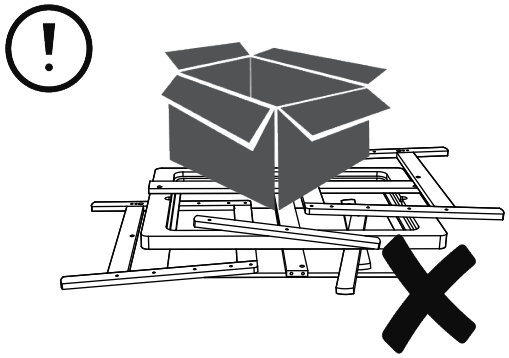

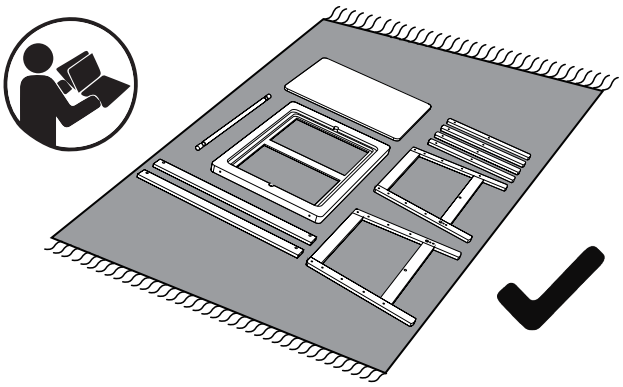

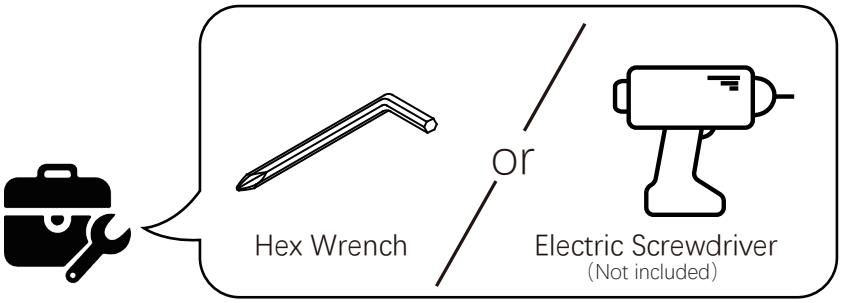

Included: Hex Wrench
Recommended: Electric Screwdriver
(for faster assembly)

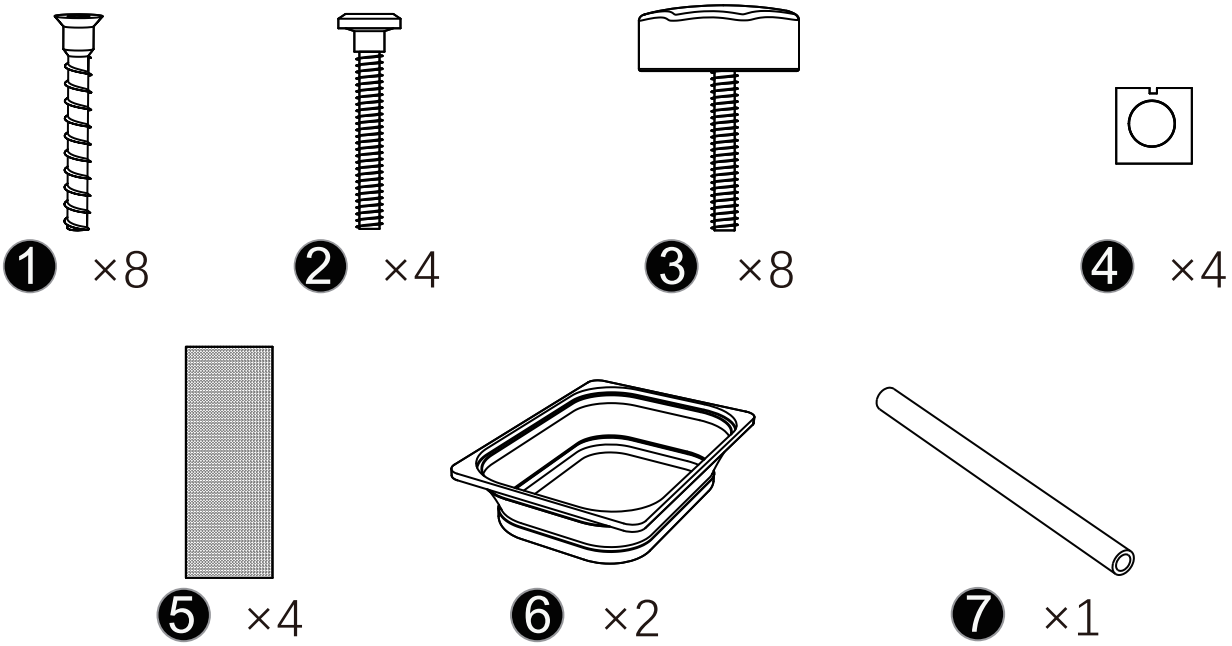

Before installation, please carefully check whether there is any sawdust left in the holes of each plate.
If there is any sawdust, please clean it up in time to avoid affecting the subsequent installation.

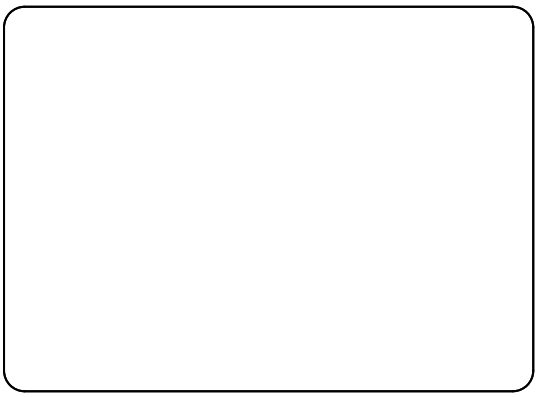

8 ×1

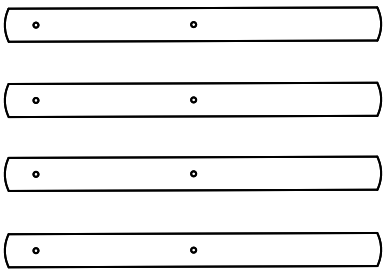

9 ×4



10 ×1

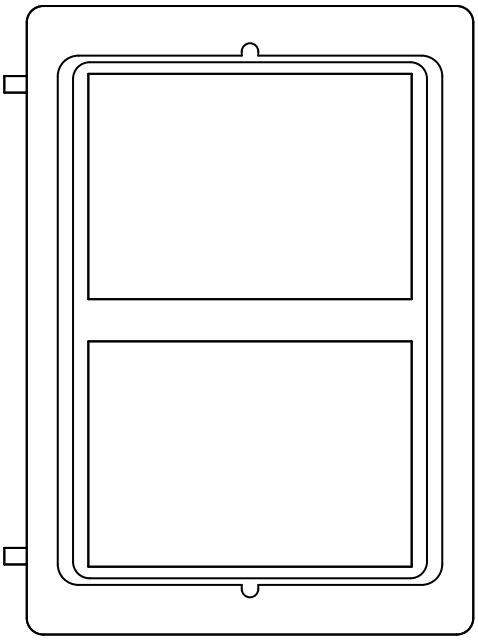

11 ×1

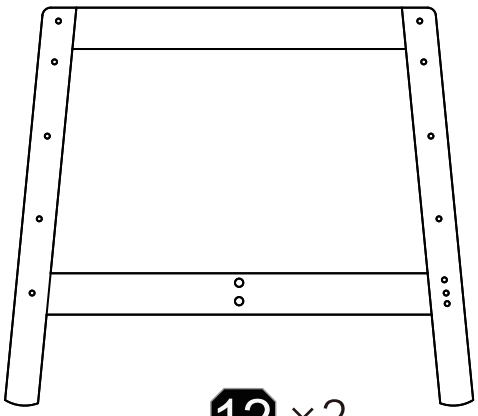

12 ×2

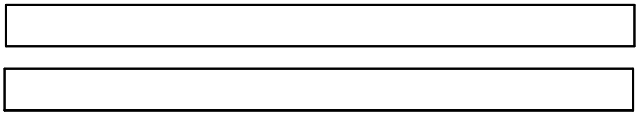

13 ×2

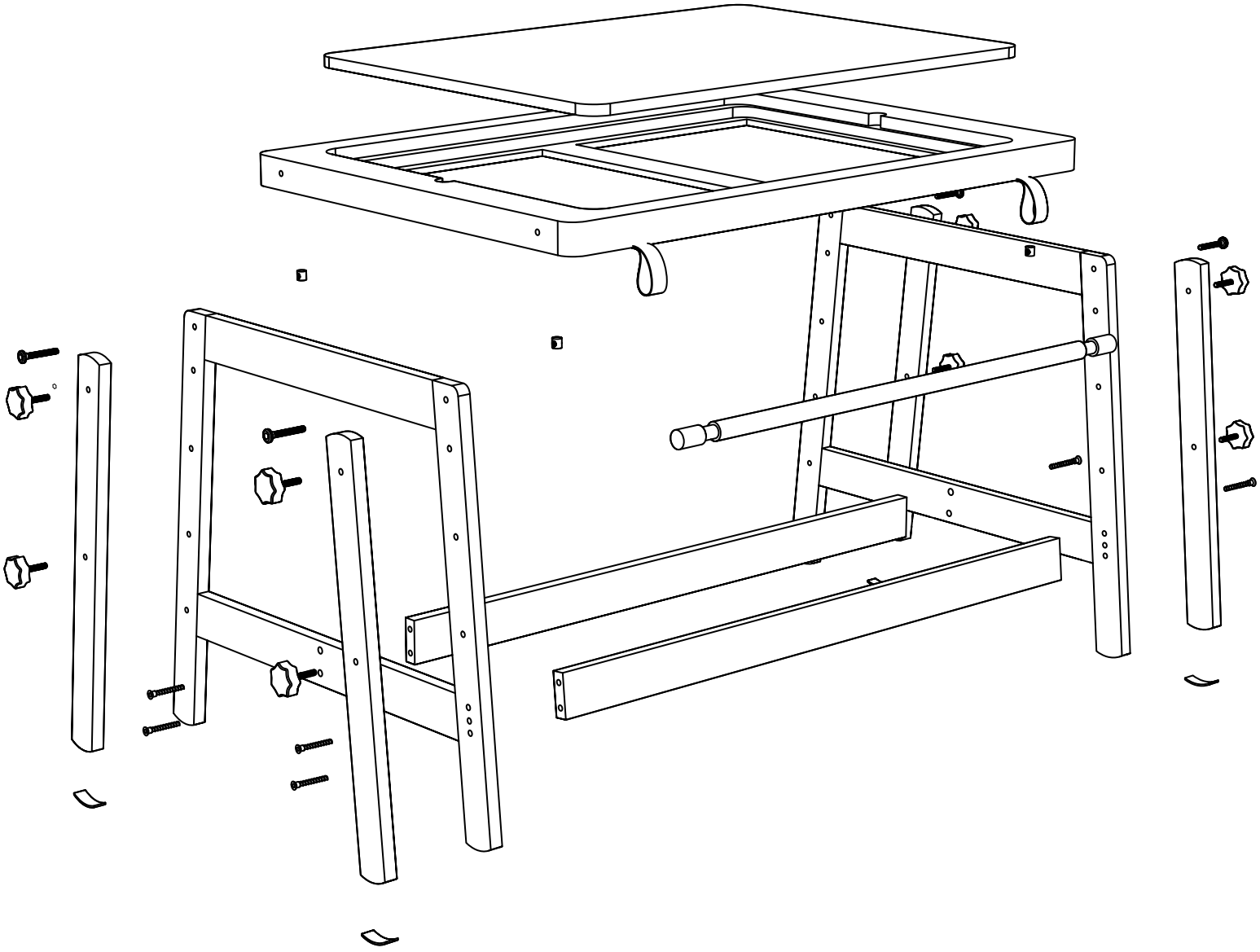

Exploded View

Step 1

Attention:First, screw in all the screws about 70%, and then once the table is fully level after assembly, tighten them all to 95%.Don't overtighten the screws, or the board might crack.

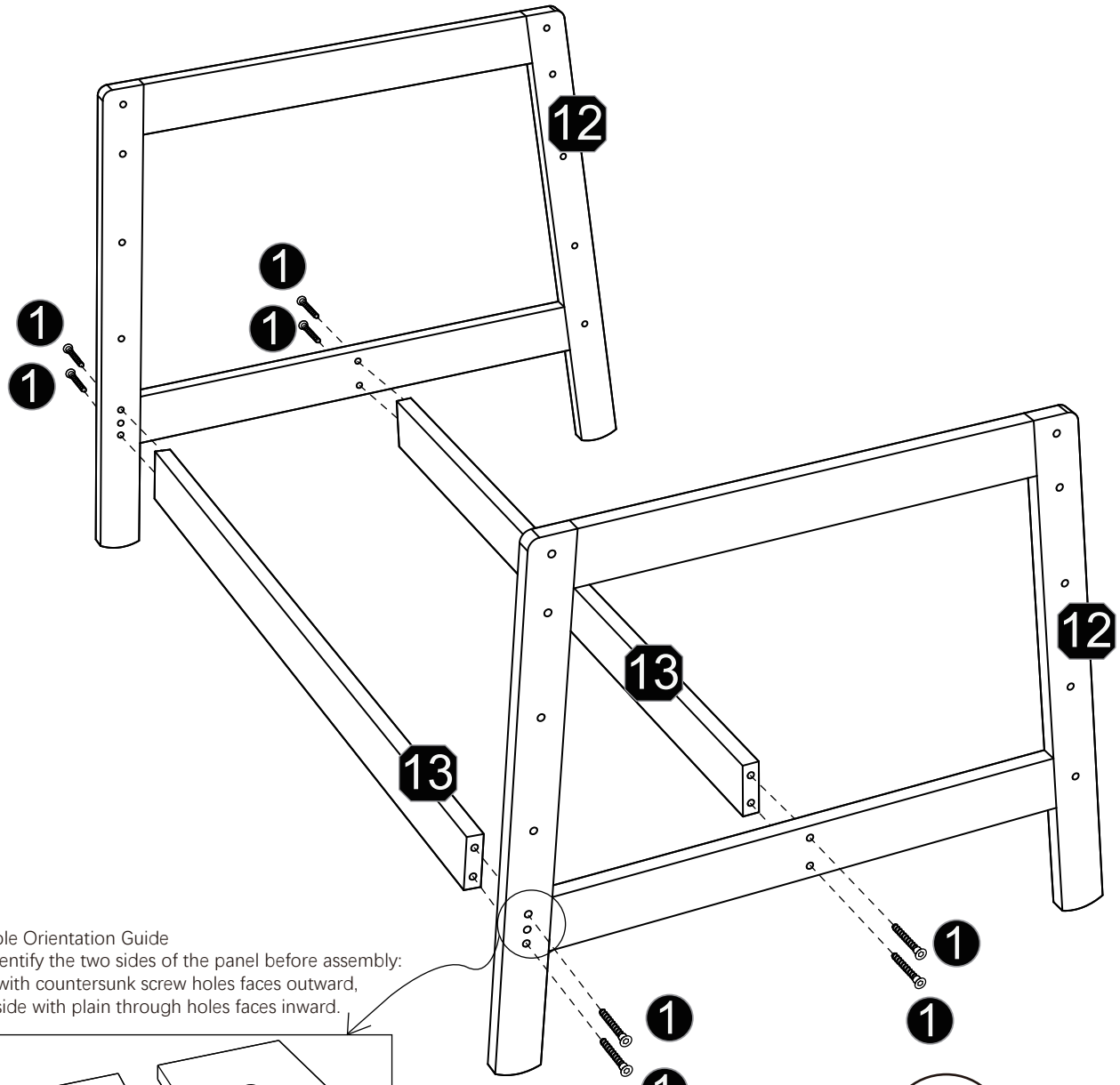

Screw Hole Orientation Guide
Please identify the two sides of the panel before assembly:
the side with countersunk screw holes faces outward,
and the side with plain through holes faces inward.

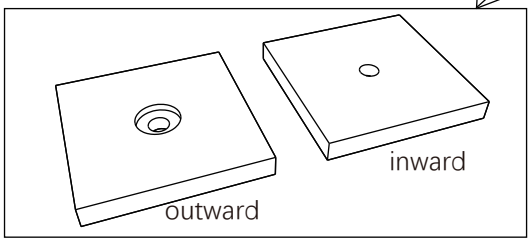



All 1 screws are installed clockwise

*Use 8 pcs screws 1 to connect board 12 with board 13 .

WINGYZ

Step 2

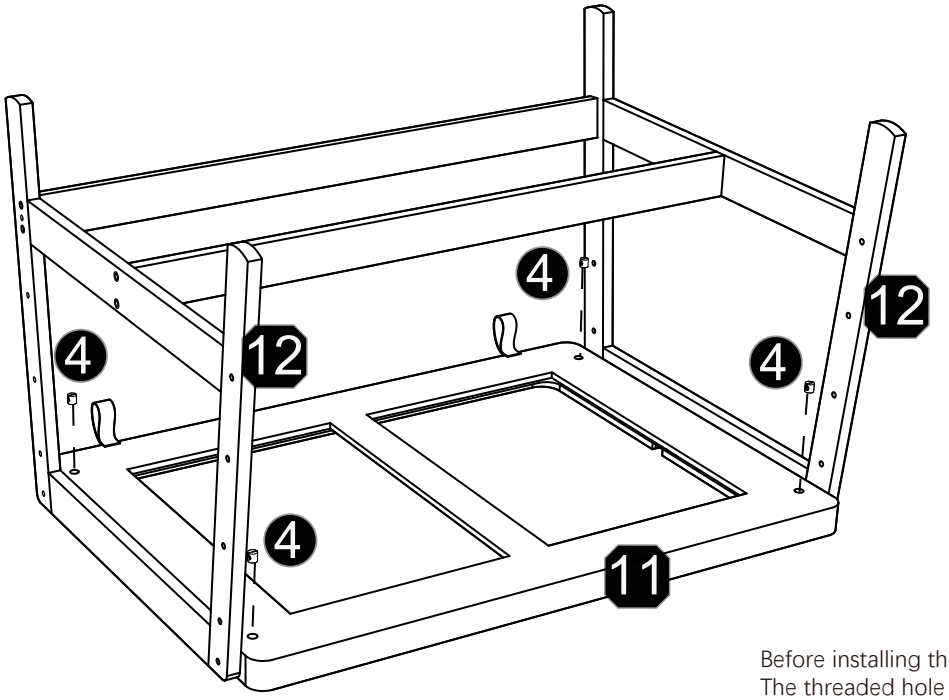

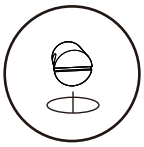

Before installing the screws, put in the nuts first 3 .
The threaded hole on the side of the nut should line up with the through-hole for the screw on the side of the panel.

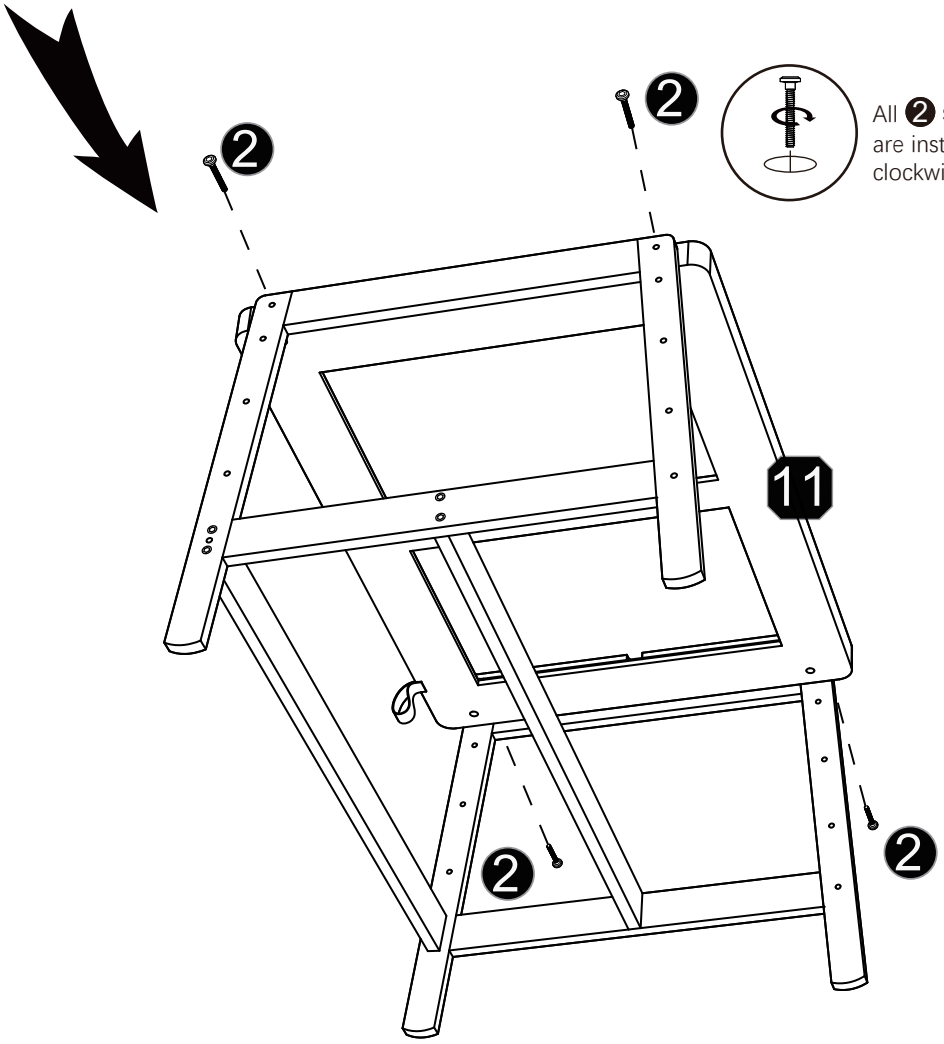

All 2 screws are installed clockwise

* Use 4 pcs nuts 4 and 4 pcs screws 2 to connect board 12 with board 11 .

Step 3

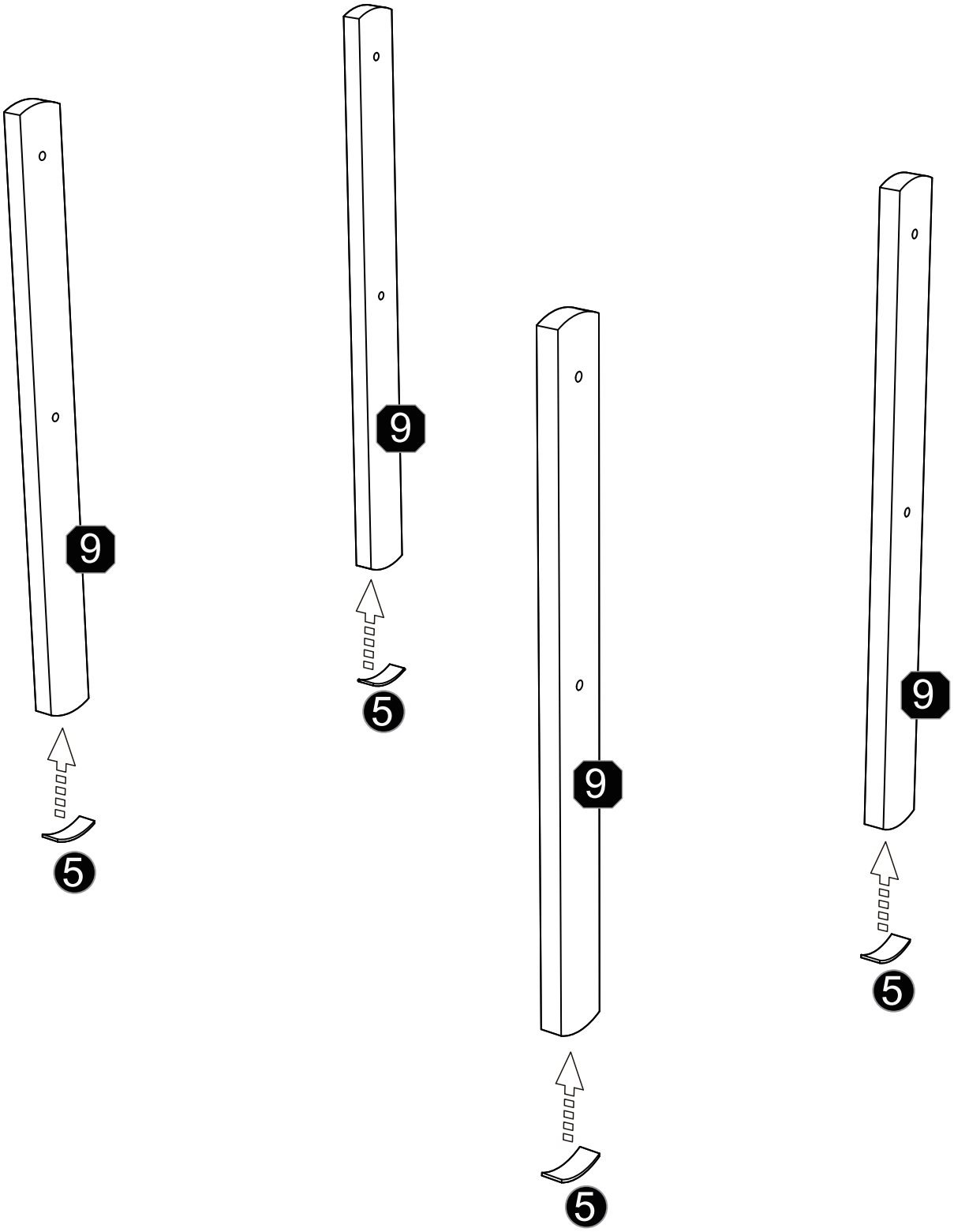

* Attach the 4 anti-slip pads 5 to board 9 .

Step 4

Attention:The table features two adjustable height settings to accommodate different activities and growing children.

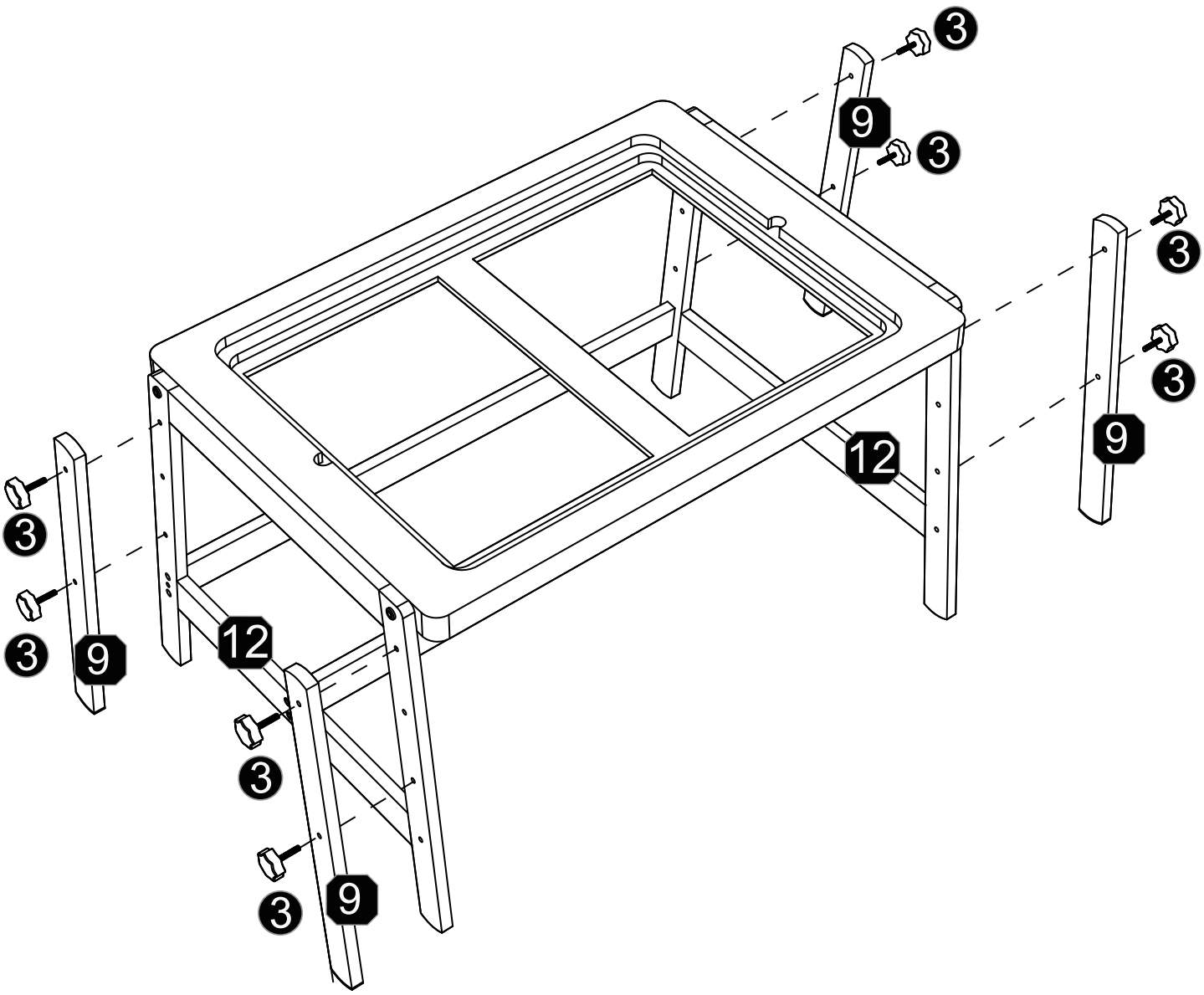

Height 1:495mm（19.5 in)

* Use 8 pcs screws 3 to connect board 12 with board 9 .

Step 4

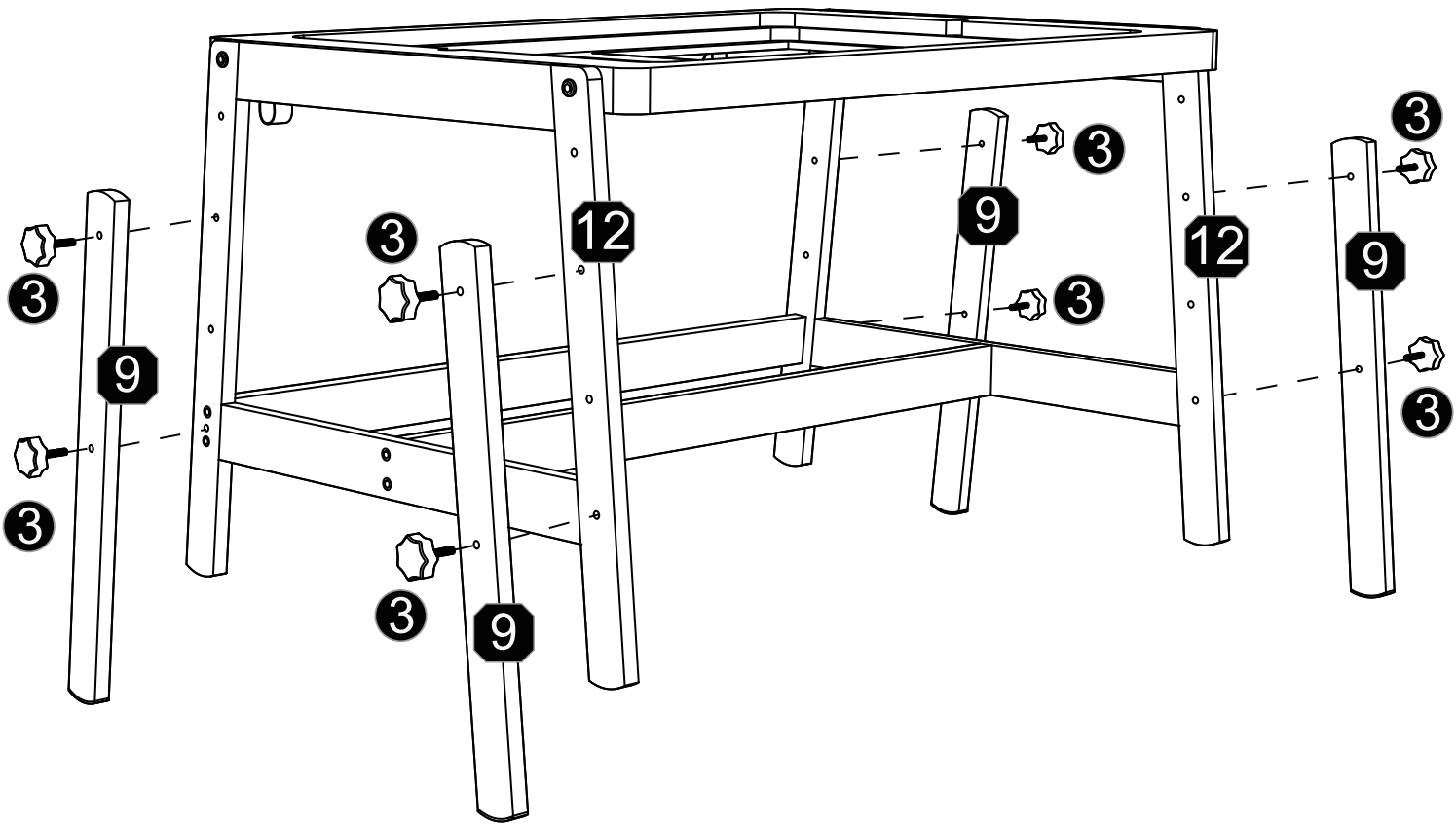

Height 2:565mm（22.2 in)

Step 5

*Install storage basin

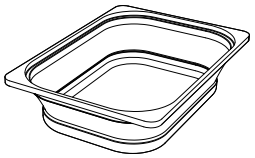

6

There are two ways to place the storage basin: one is on the two frames under the drawing board, and the other is on the two support boards under the table.

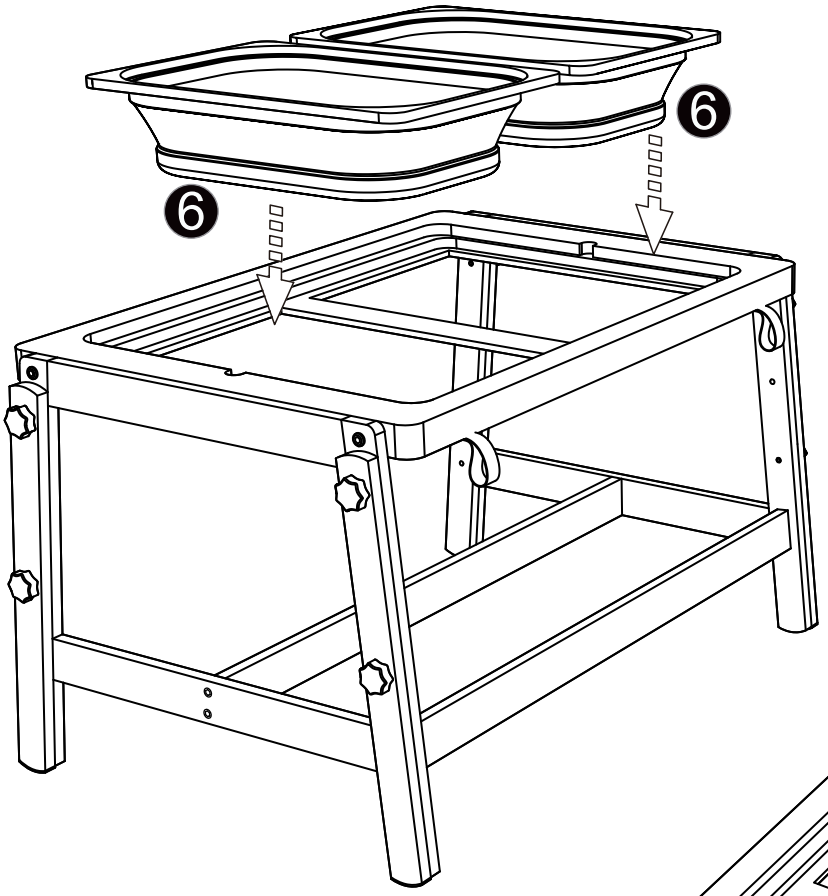

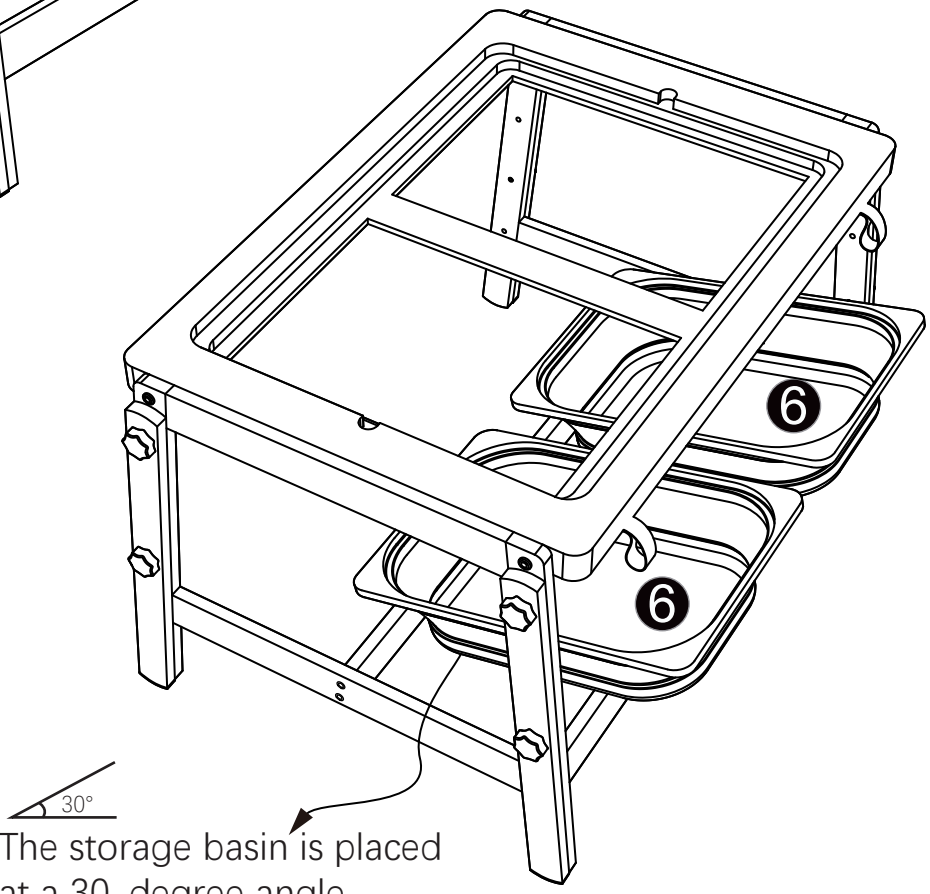

The storage basin is placed at a 30-degree angle.

Step 6

*Install painting tools

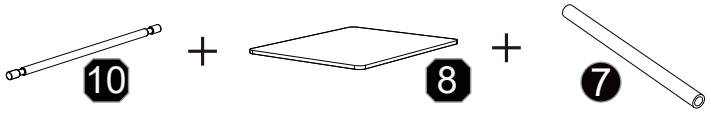

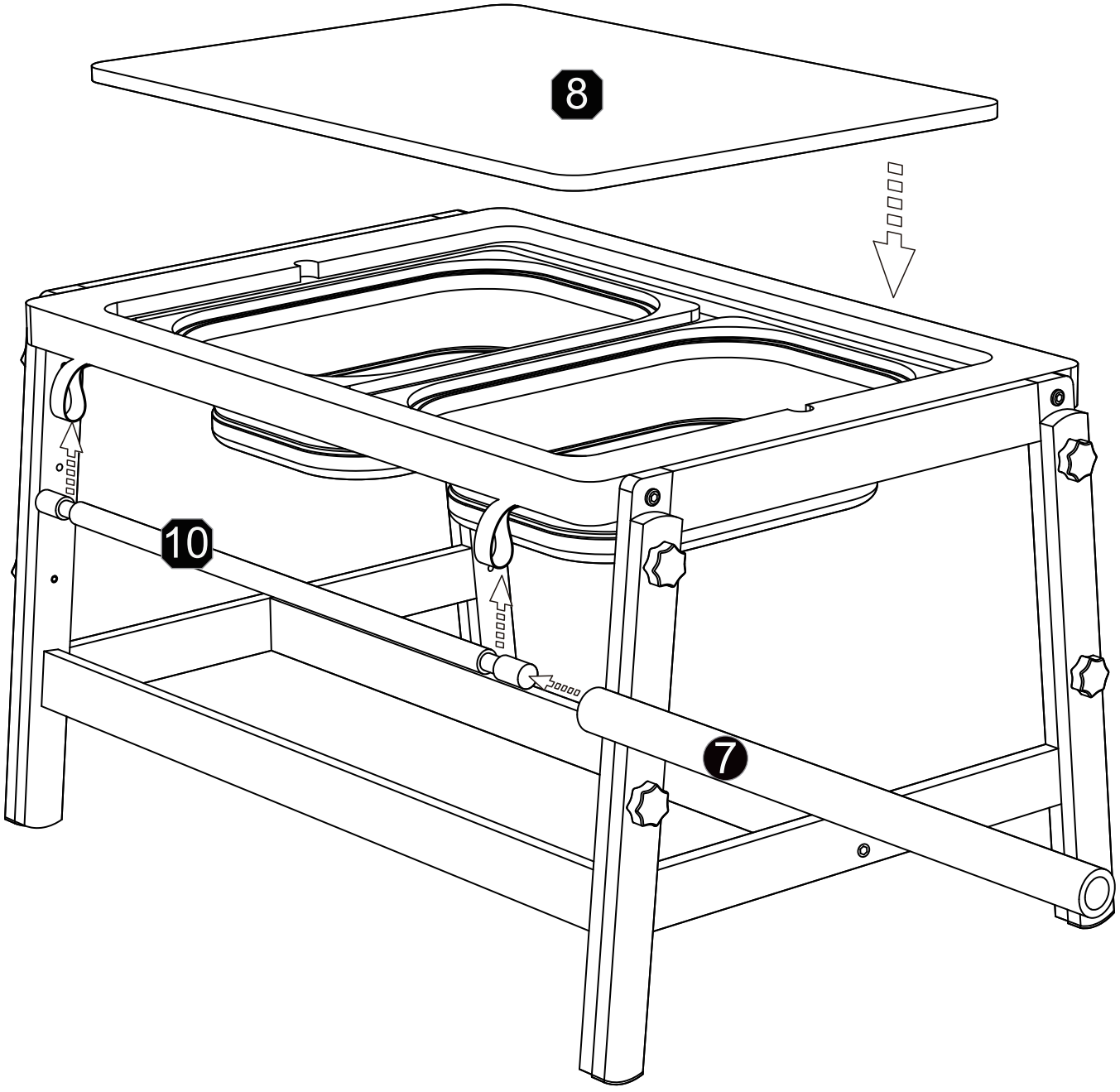

Finished Assembly

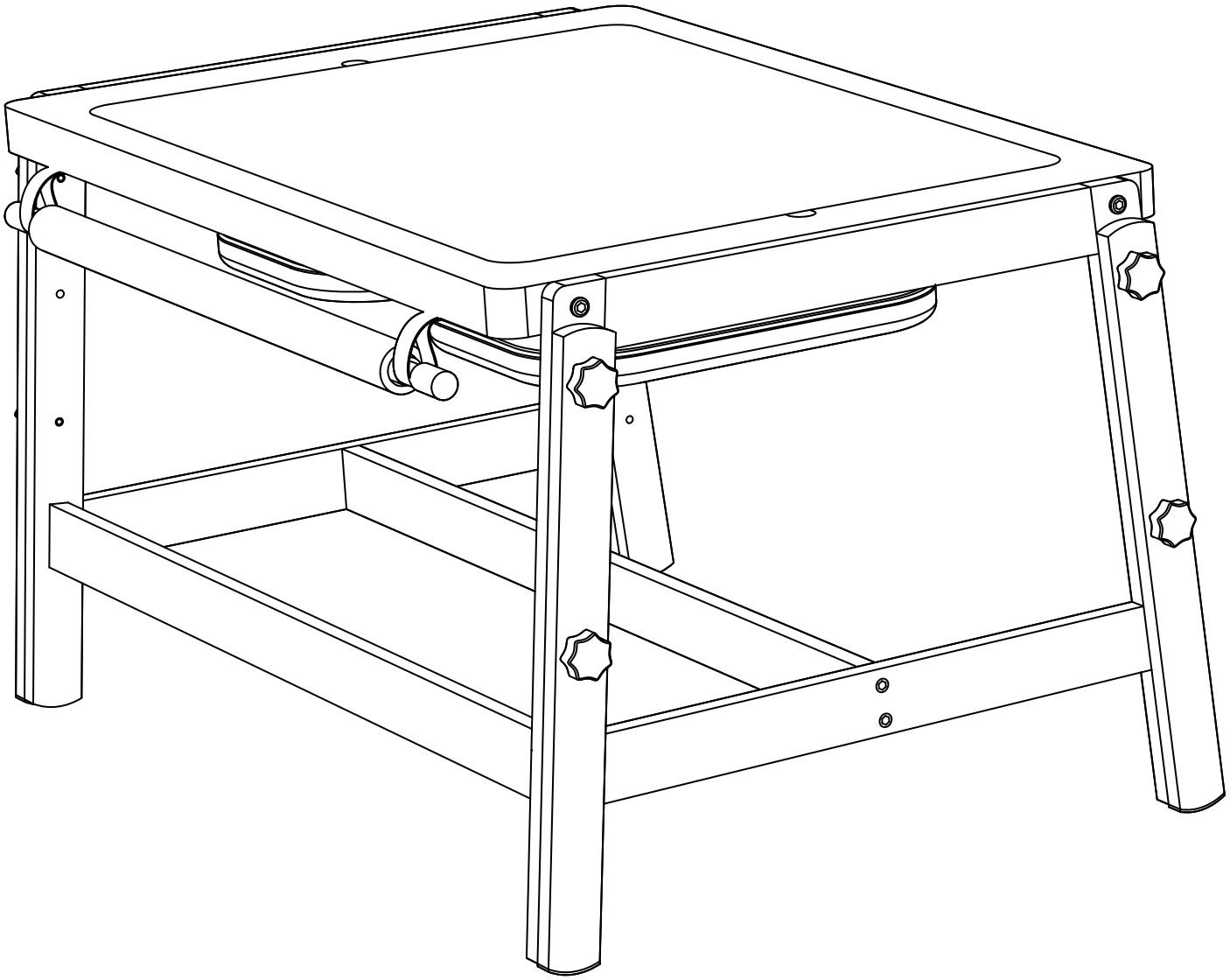

Product Declaration

Product:	Height-Adjustable Double Table
Product No:	Please refer to the label or the Assembly and User Instruction. The product code refers to the type, length and color of the product. As an example: “1”· Screws, “12“· Painting scroll.
Technical specifications and dimensions:	Please refer to the Assembly and User Instruction.
Assembly and spare parts:	Please refer to the Assembly and User Instruction.
Production date:	Please refer to the label on the outer package.

Since our establishment in 2016, WINGYZ Wooden Home has been dedicated to creating high-quality and authentic wooden home furnishings. Our skilled craftsmen use traditional woodworking techniques to transform the natural beauty of wood into unique,functional pieces that add warmth and character to any home.



Premium Materials
WINGYZ adheres to the highest standards of quality and sustainability when crafting furniture. For instance, we exclusively use the finest wood sourced from sustainable forests in Shandong, China. This commitment ensures that we only use the best materials to create our furniture.



Finishing Touches
The surfaces of WINGYZ furniture undergo multiple layers of finishing, resulting in an elegant and refined appearance. We take pride in our meticulous craftsmanship to provide the best possible finish for our furniture pieces.



Non-Toxic Furniture
WINGYZ values the health of your children, which is why all our furniture complies with international safety standards. Our furniture is designed to be more durable and sturdy, ensuring a safe and healthy environment for your family.



Natural Color Variations
Many WINGYZ furniture pieces are made from solid wood or partially solid wood, which may result in natural color variations between products. This is a natural phenomenon, as wood is a living material. All WINGYZ furniture is crafted from natural products, which may exhibit these natural color differences.



Excellent After-sales Service
If you find that the accessories are missing, please contact us immediately. We will provide you with the perfect solution to ensure your satisfaction with our products.

★ MAINTENANCE INSTRUCTIONS:

Clean with a damp cloth. Use a sponge and mild soap to remove stubborn dirt.
Avoid solvents and thinners.
Screws and bolts should be retightened from time to time.

Manufacturer: Shenzhen Qicai Guangying Electronic and Electrical Appliance Co, Ltd
Address: 6A, 6th Floor, No. 2 Huishi Street Lane, Songhe Community, Shenzhen, GUANGDONG, China 518000

For children aged 3 years and above.
Adult assembly only.