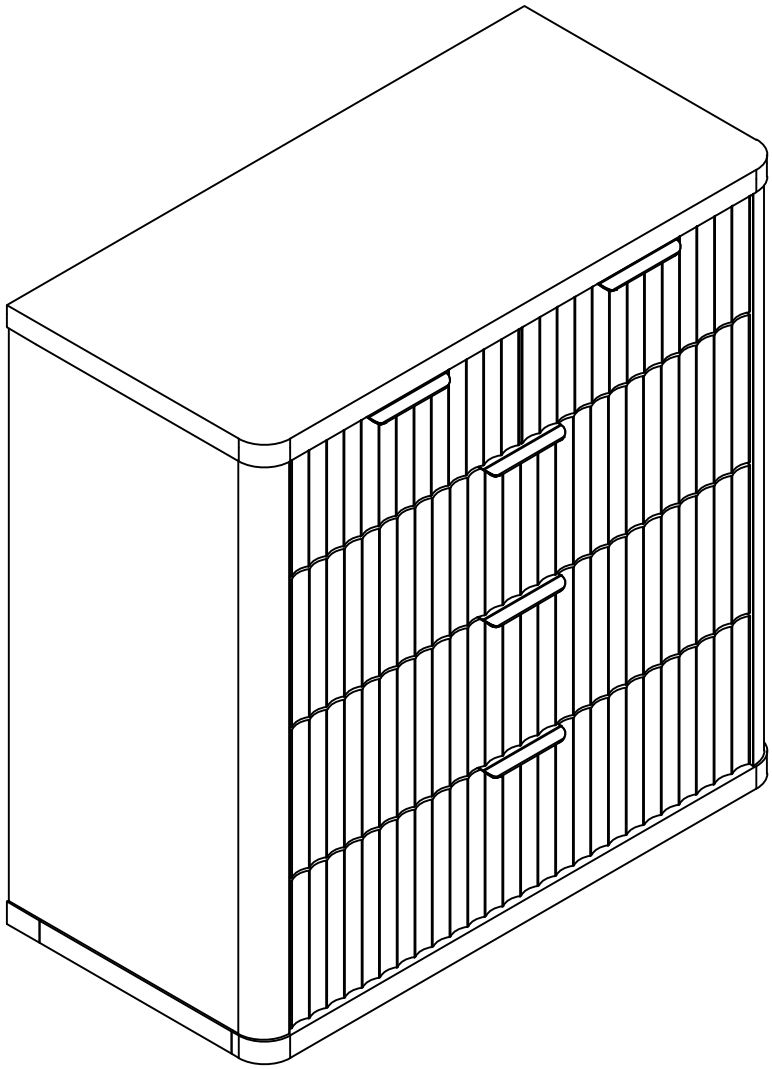

ATTENTION

If there is any missing, please kindly send us messages to let us know the part number of missing part regarding to the first page of instructions.

Please also provide your full address, recipient name and contact phone number so that we can send replacement to you as soon as possible.

Children have died from furniture tipover. To reduce the risk of furniture tipover. ALWAYS install tipover restraint provided.

# BEFORE STARTING

## Before Using Product

- Read each step carefully before starting.It is very important thateach step is performed in the correct order.If these steps are not followed in sequence,assembly difficulties will occur.
- Make sure all parts are included.
- Work in a spacious area and near where the unit will be used,preferably on a carpet,or use a piece of the cardboard packaging to protect your floor and product.
- For a smooth assembly process,we suggest you keep a lite tightness for all the screws during assembly.After the whole product is assembled, firmly tighten all the screws.

## ⚠ WARNING

- Do not allow children to climb on unit.
- Avoid sharp objects or corrosive chemicals to prevent damage to the product.
- During assembly,keep parts and packaging materials away from children and pets as there could be potential injury and choking hazards.
- Please make sure that all objects are removed before moving the assembled unit.
- The unit must be team lifted,not dragged or pushed.Failure to do so could cause instability,product collapse,and/or serious injury.
- Be careful when using power tools to assemble your furniture.Power tools may strip or damage the parts.

# QUICKFIT

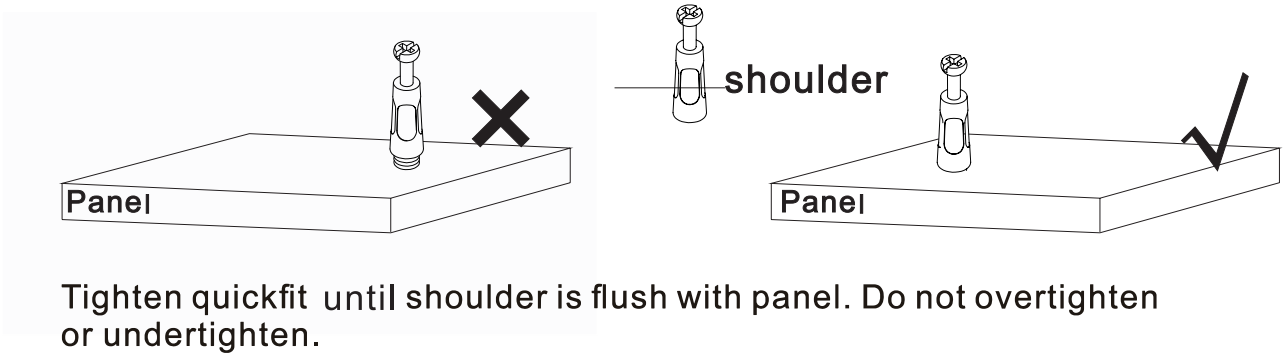


Tighten quickfit until shoulder is flush with panel. Do not overtighten or undertighten.

# CAM LOCK

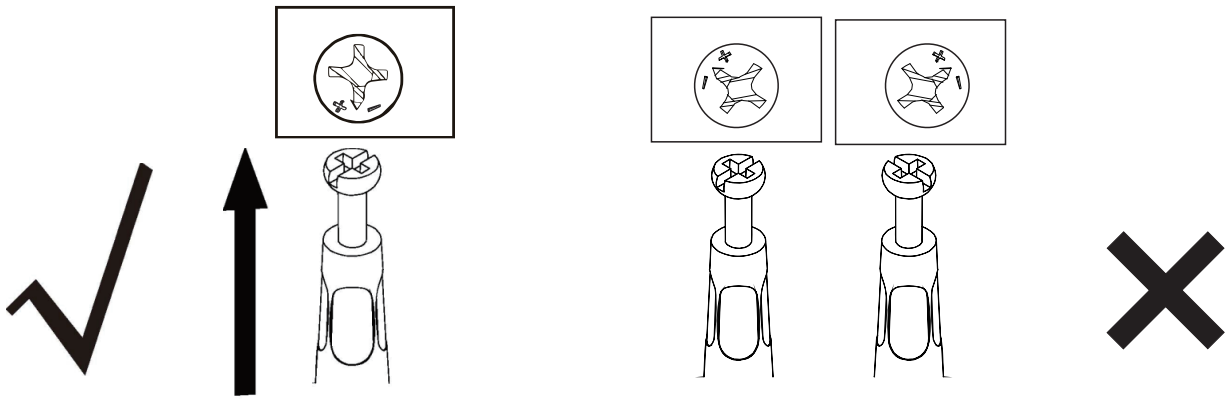

CORRECT WRONG

When fitting cam lock, ensure starting positions is correct before you insert cam lock to quickfit.

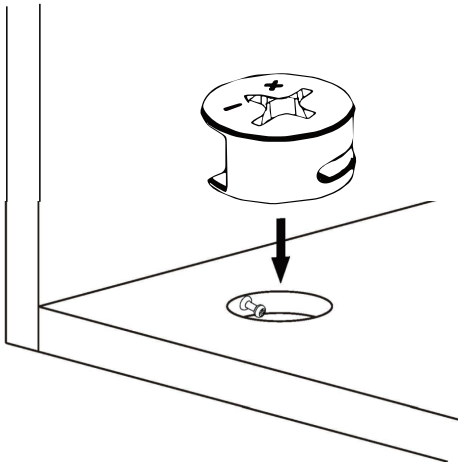

Quickfit head should be in the center of the cam lock. When the two panels are joined. Cam lock should be inserted before quickfit.

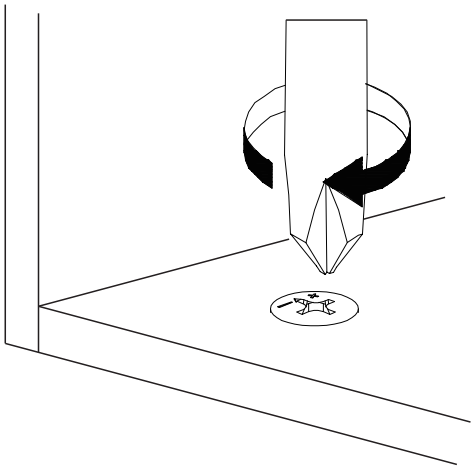

Turn cam lock clockwise to tighten.

# PART LIST

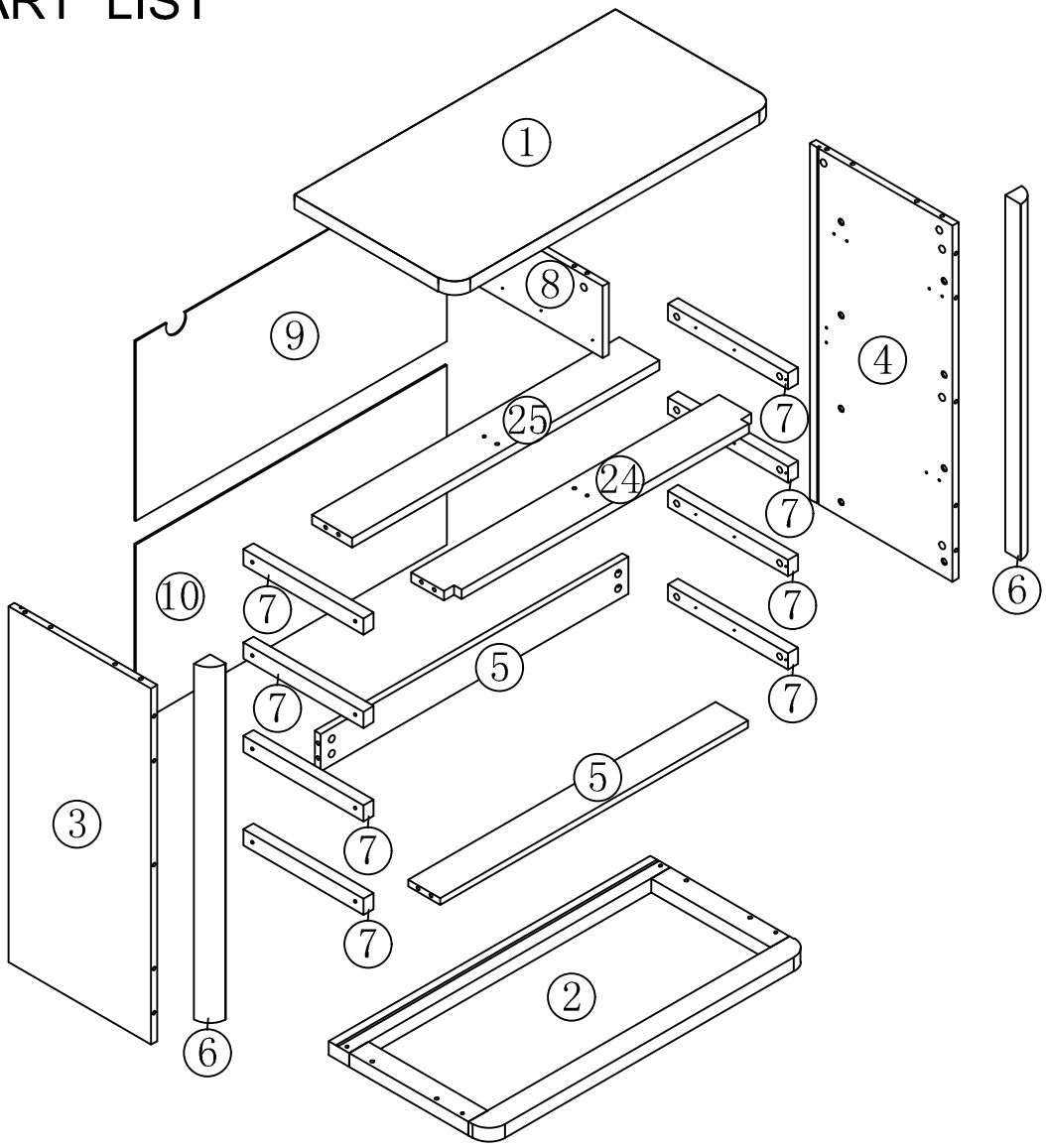
1
8
9
4
25
7
24
7
10
7
7
6
5
7
7
5
3
7
7
2
6

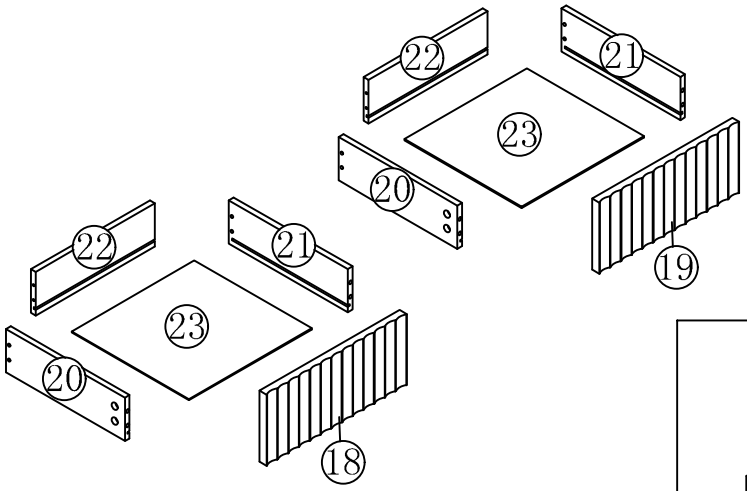
22
21
23
20
19
22
21
23
20
18

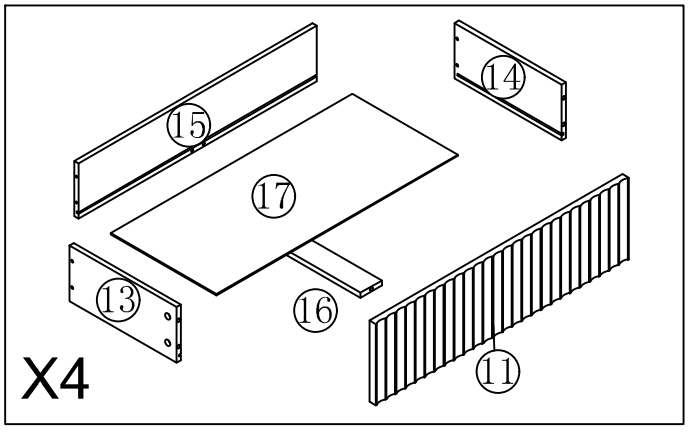
14
15
17
13
16
11
X4

# PART LIST

| | | |
|---|---|---|
| ① 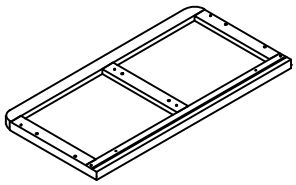 1PC | ② 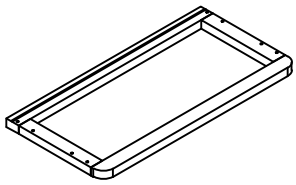 1PC | |
| ③ 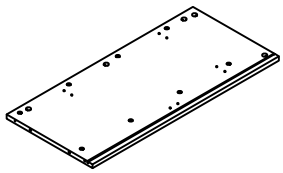 1PC | ④ 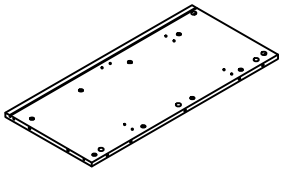 1PC | ⑤ 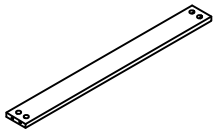 2PCS |
| ⑥ 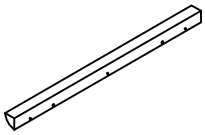 2PCS | ⑦  8PCS | ⑧ 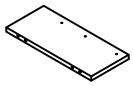 1PC |
| ⑨ 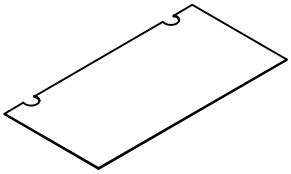 1PC | ⑩ 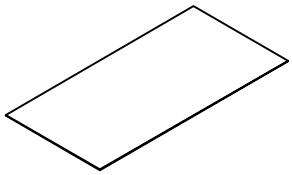 1PC | ⑪ 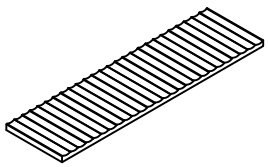 3PCS |
| ⑬ 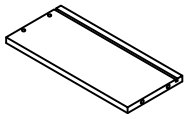 3PCS | ⑭ 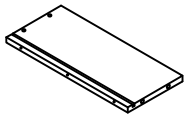 3PCS | ⑮ 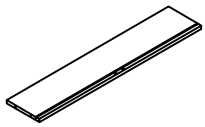 3PCS |
| ⑯ 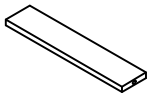 3PCS | ⑰ 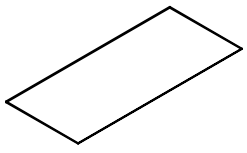 3PCS | ⑱ 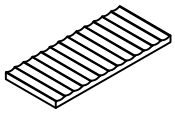 1PC |

# PART LIST

| | | |
|---|---|---|
| 19 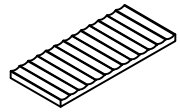 1PC | 20 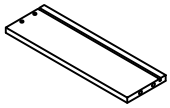 2PCS | 21 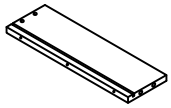 2PCS |
| 22 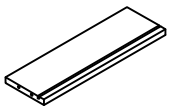 2PCS | 23 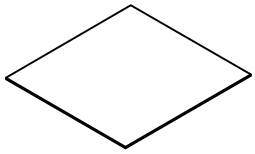 2PCS | 24 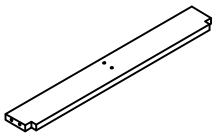 1PC |
| 25 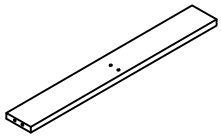 1PC | | |

# HARDWARE LIST

| | | |
|---|---|---|
| A 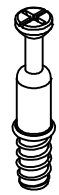 ϕ6X35 (51+3)PCS | B  ϕ15X9.5 (51+3)PCS | C 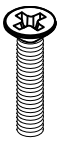 ϕ1/4X25 (16+1)PCS |
| D  ϕ8X30 (16+1)PCS | E  ϕ5X40 (32+2)PCS | F 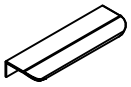 5PCS |
| G 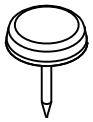 (4+1)PCS | H  (8+1)PCS | I  ϕ3X15 (8+1)PCS |
| J 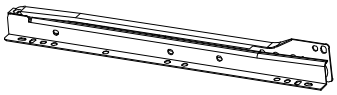 5PCS | K  ϕ3X12 (70+3)PCS | M 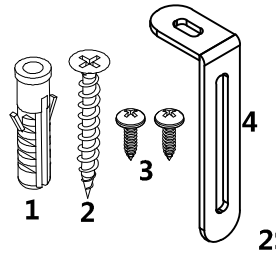  2SET |
| N 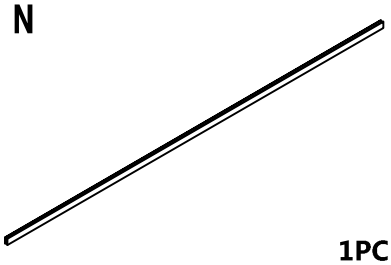 1PC |  2PCS |  1PC |
| | | |

J X 5SET

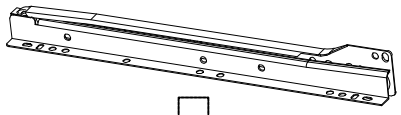

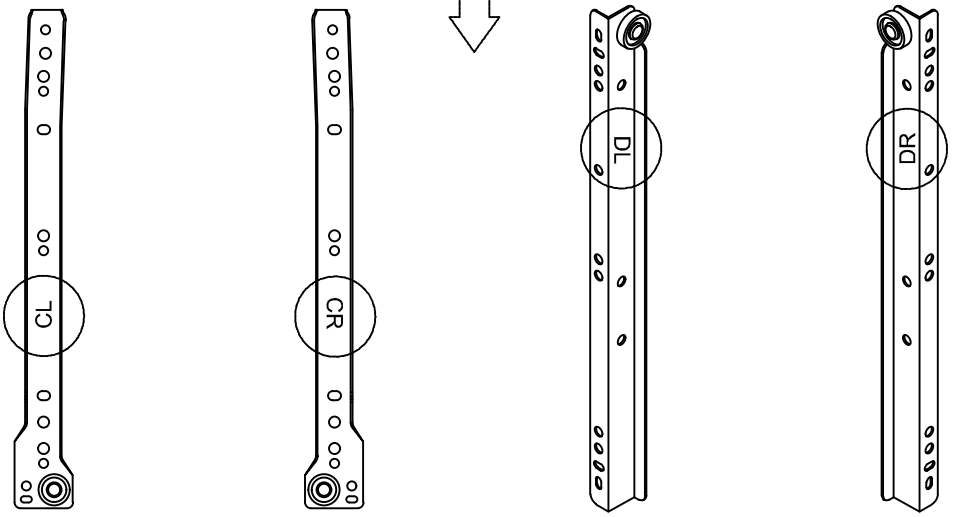


CL CR DL DR

---

M =

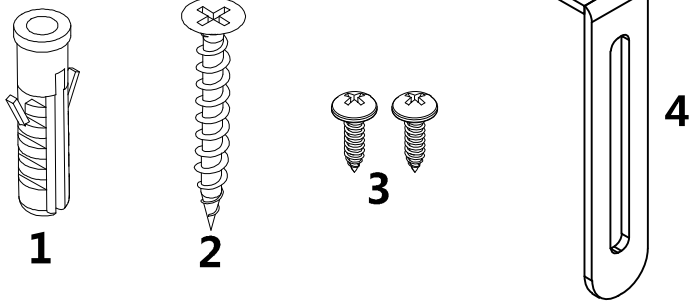

## STEP 1

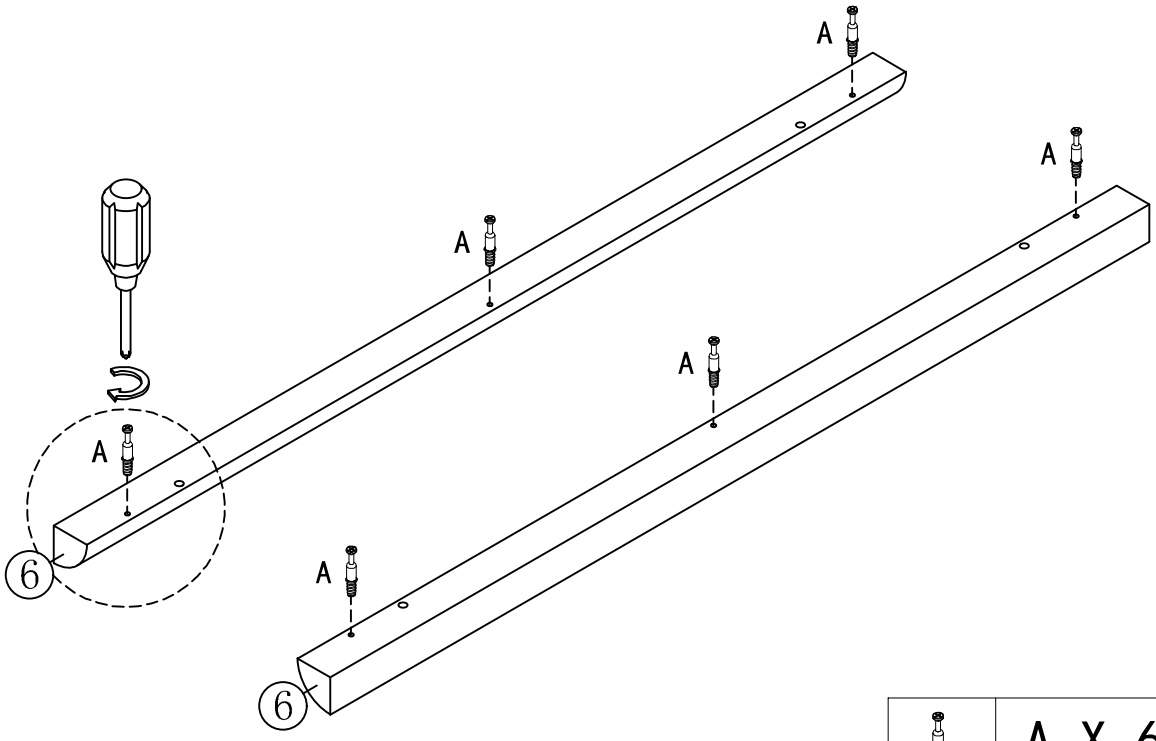


| | |
|---|---|
| | A X 6PCS |

## STEP 2

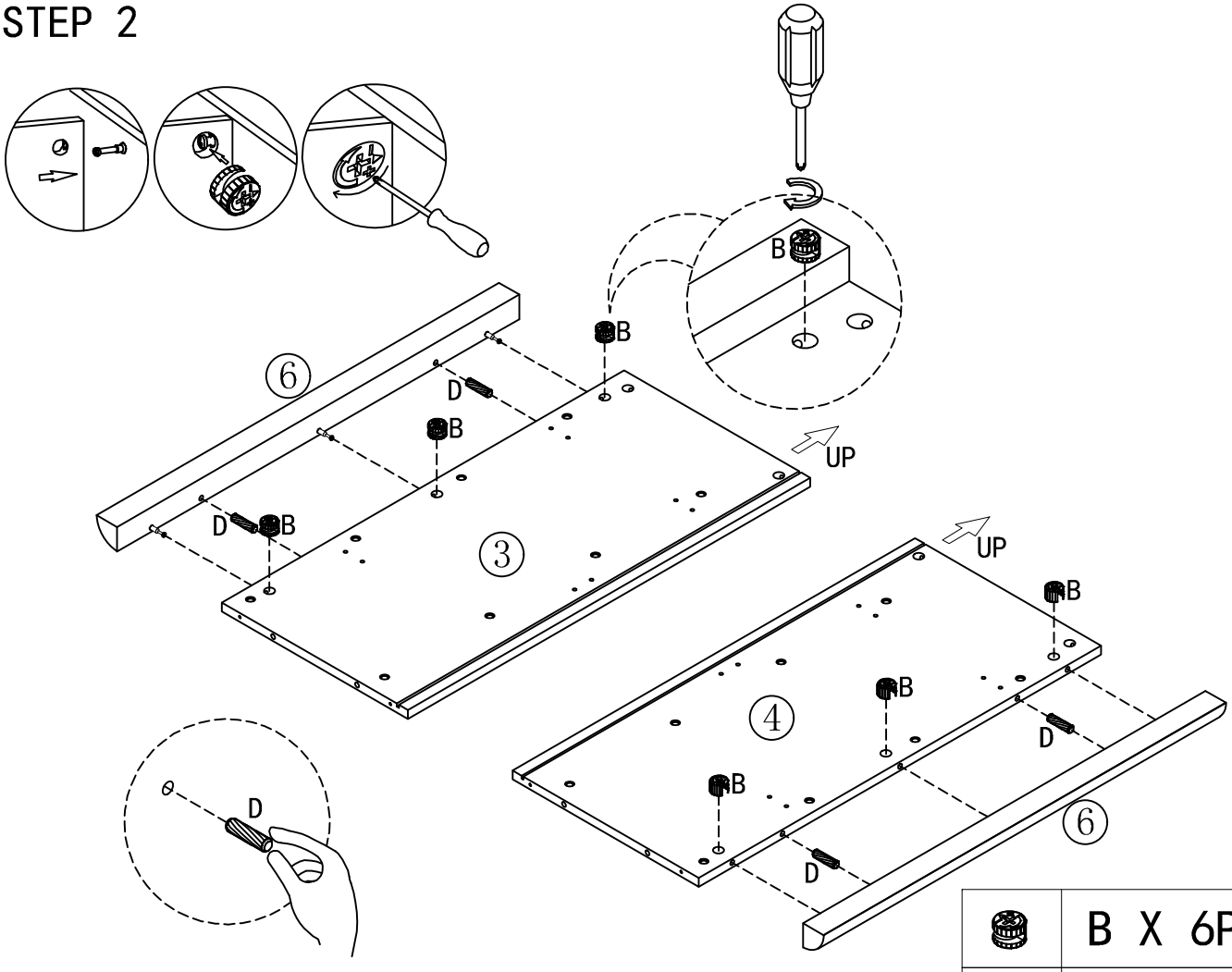


| | |
|---|---|
| | B X 6PCS |
| | D X 4PCS |

## STEP 3

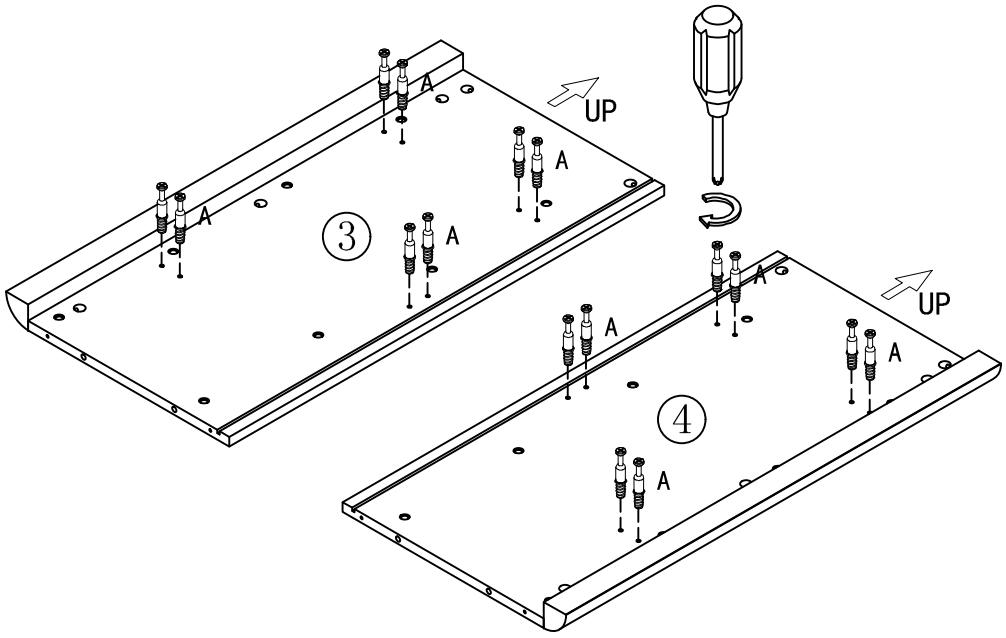


| | |
|---|---|
| | A X 16PCS |

## STEP 4

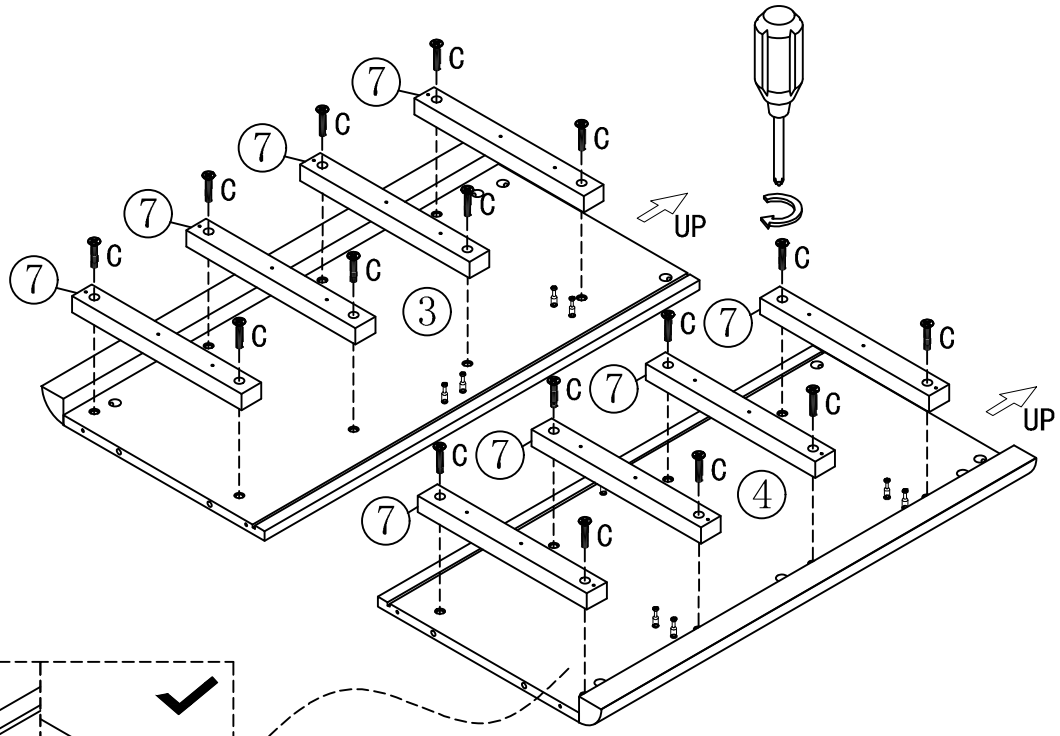


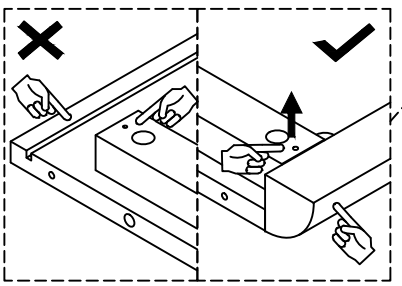

| | |
|---|---|
| | C X 16PCS |

STEP 5

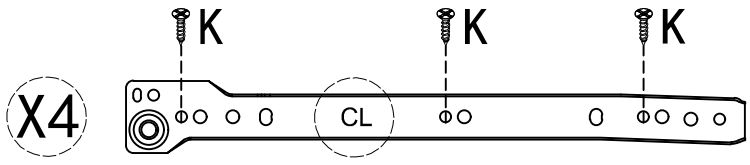


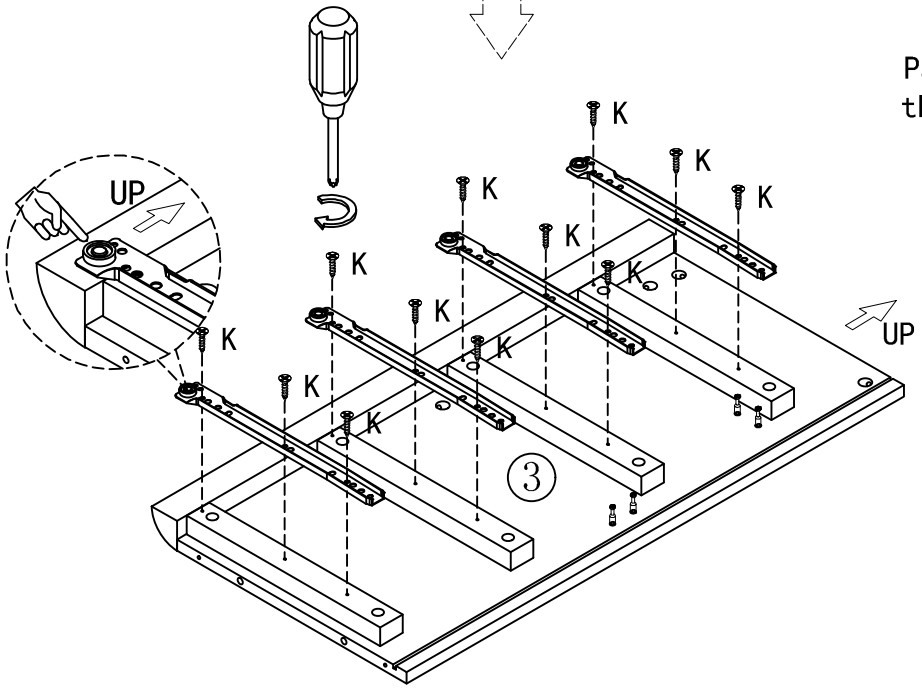


Pay attention to the hole position.

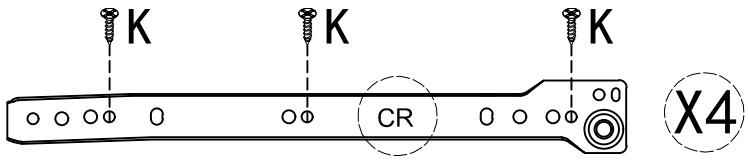


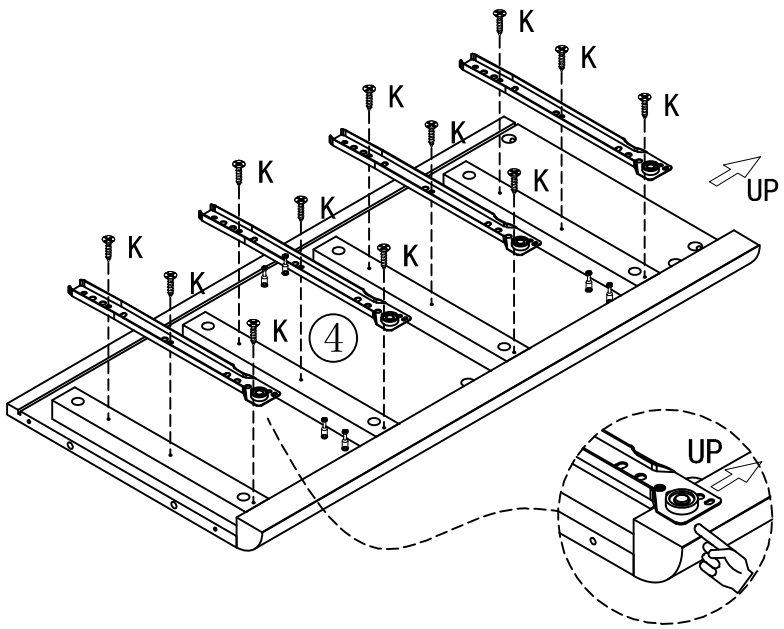


| | |
|---|---|
| | K X 24PCS |

STEP 6

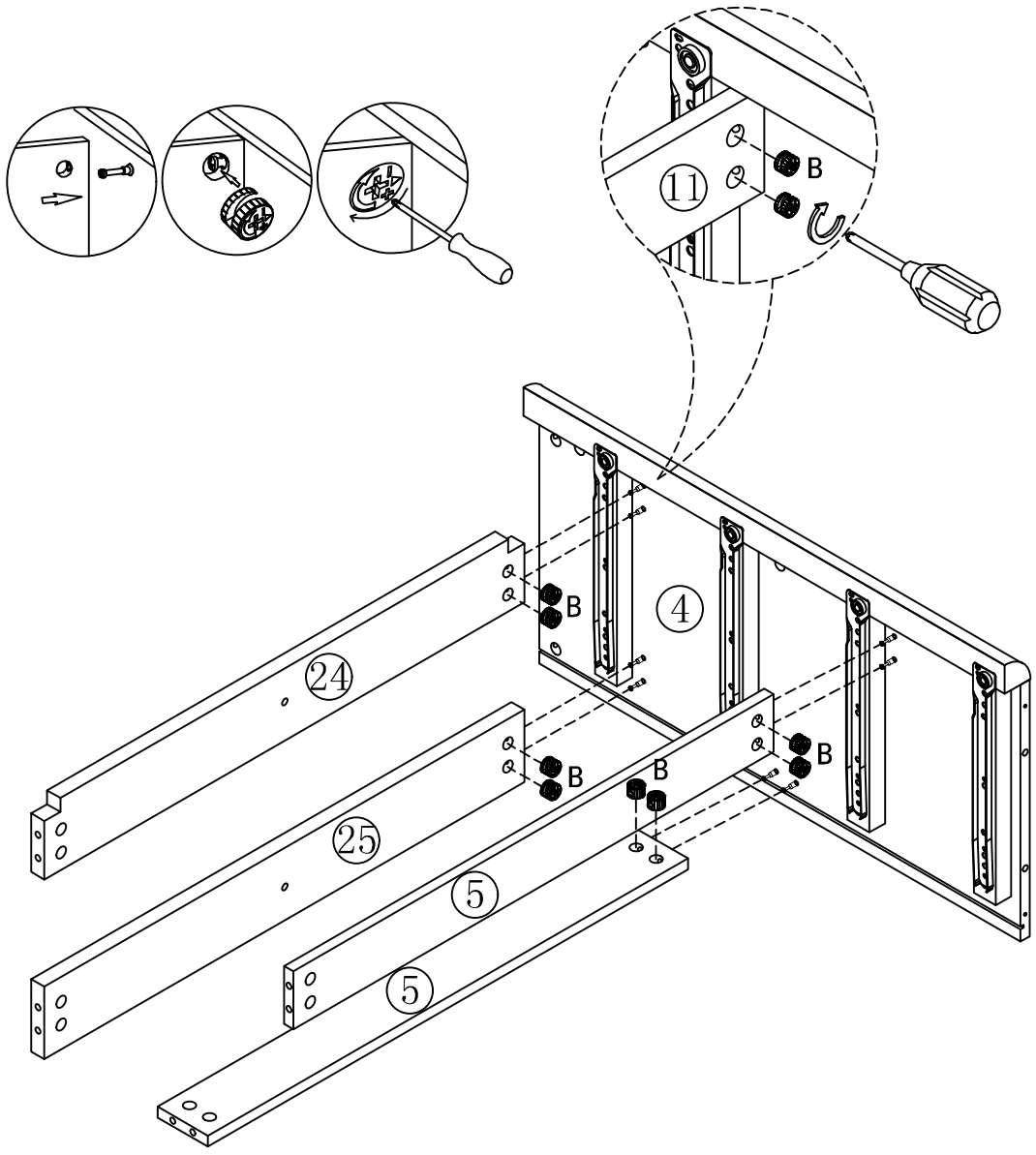


| | |
|---|---|
|  | B X 8PCS |

STEP 7

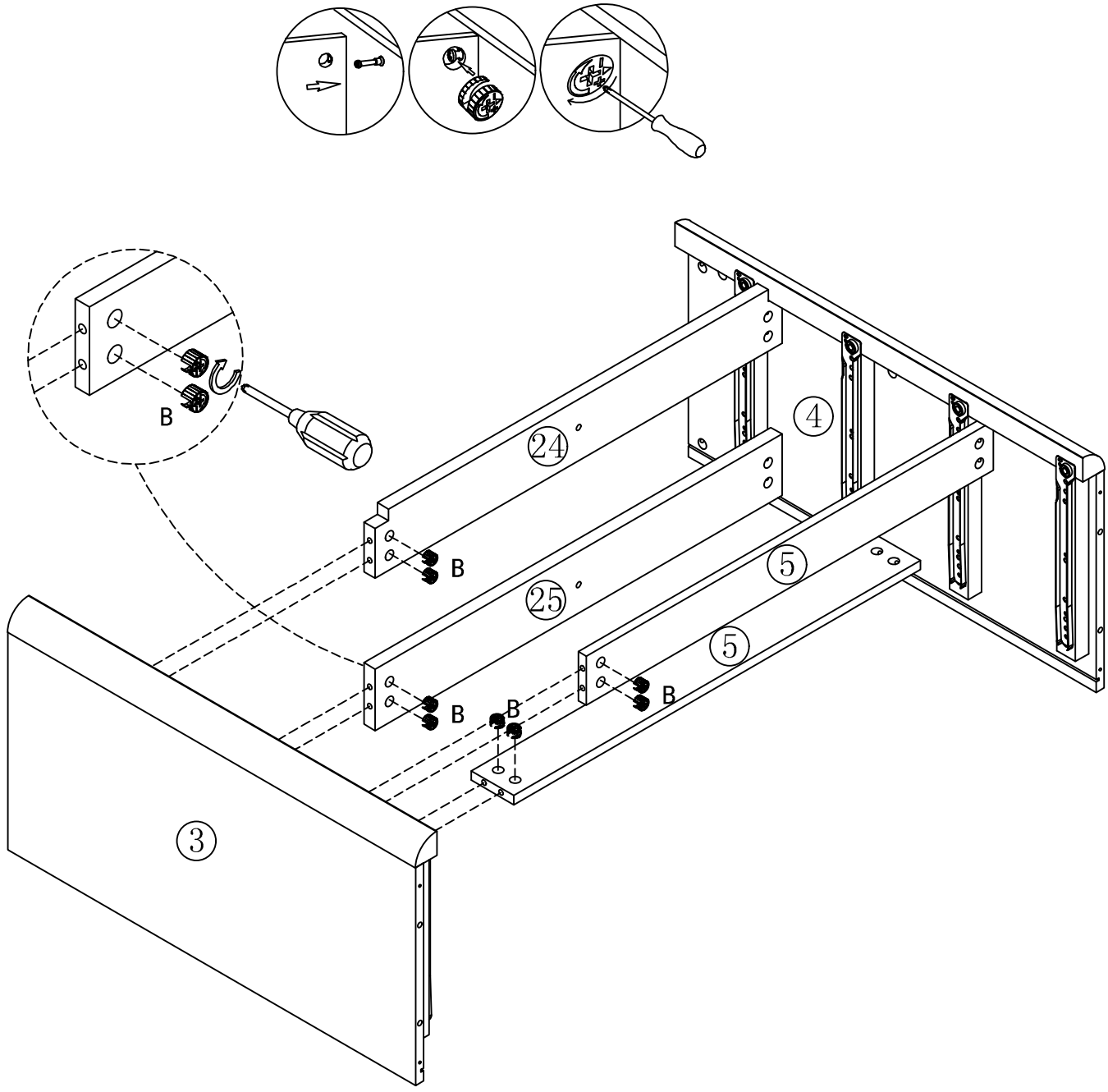


| | |
|---|---|
|  | B X 8PCS |

## STEP 8

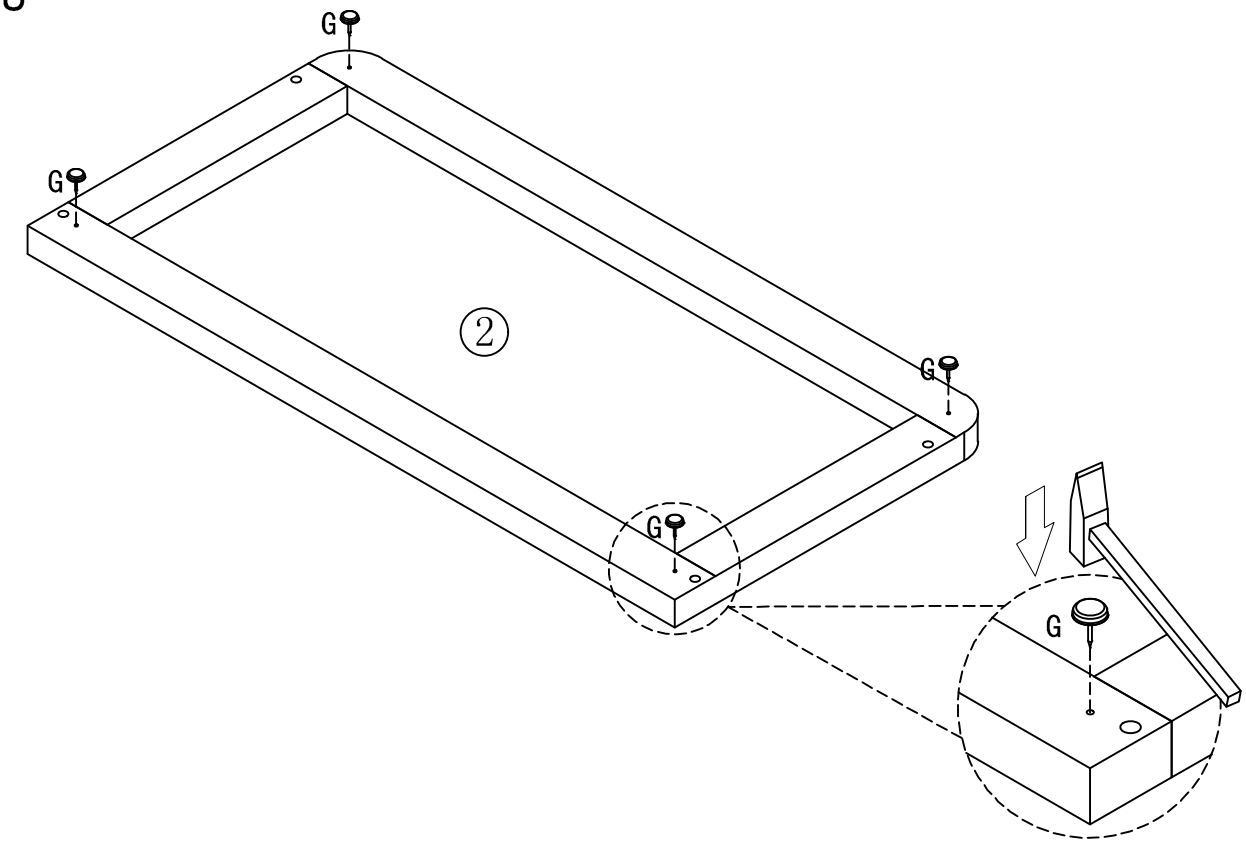


| | |
|---|---|
|  | G X 4PCS |

## STEP 9

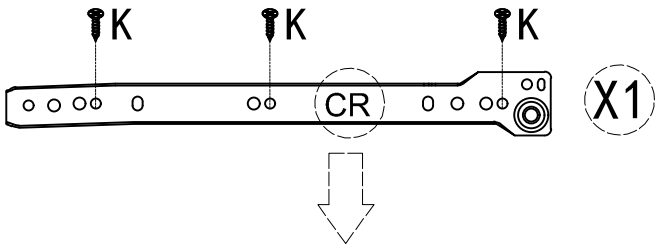


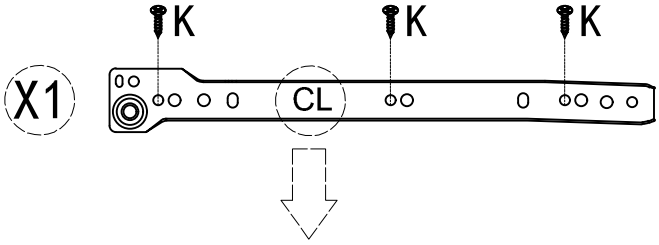


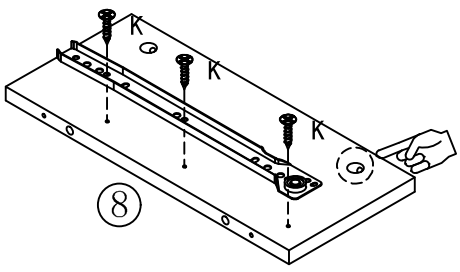


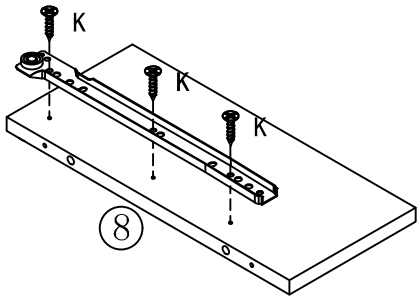


Pay attention to
the hole position.




| | |
|---|---|
|  | K X 6PCS |

STEP 10

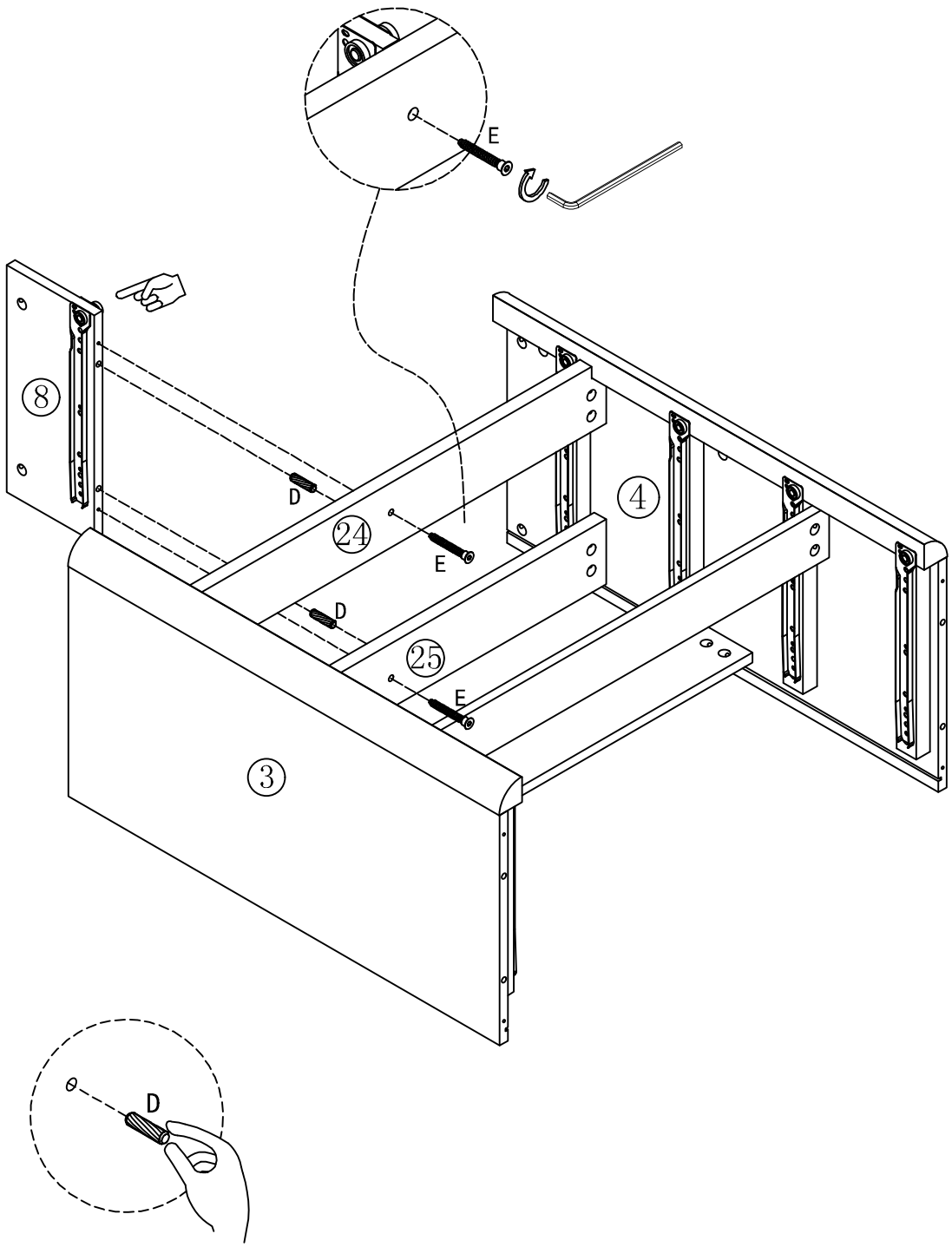


| | |
|---|---|
| | D X 2PCS |
| | E X 2PCS |

STEP 11

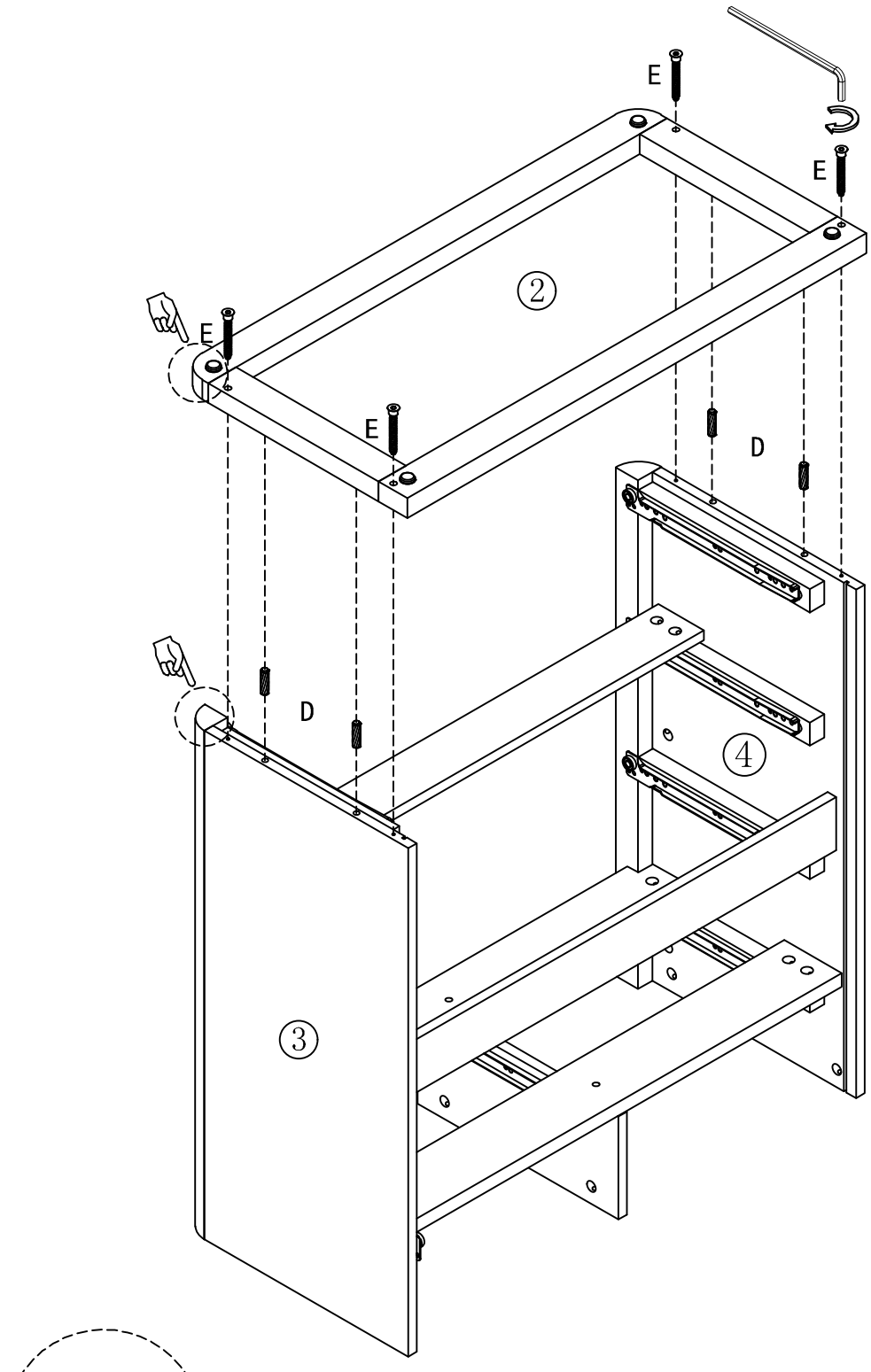


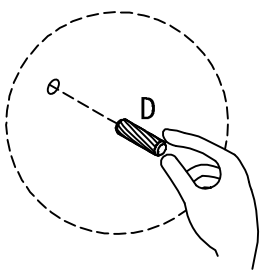


| | |
|---|---|
| | D X 4PCS |
| | E X 4PCS |

STEP 12

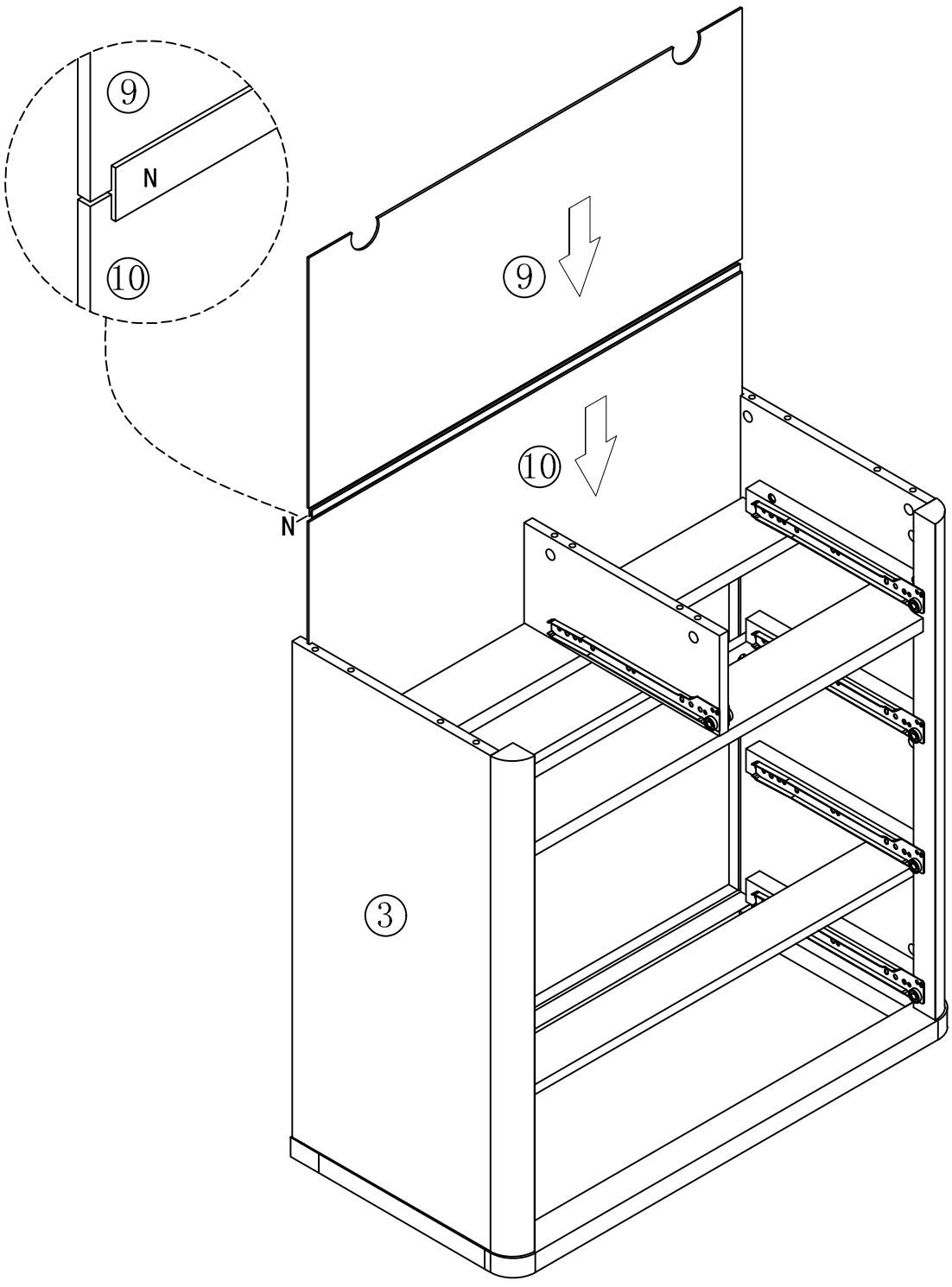


N X 1PC

# STEP 13

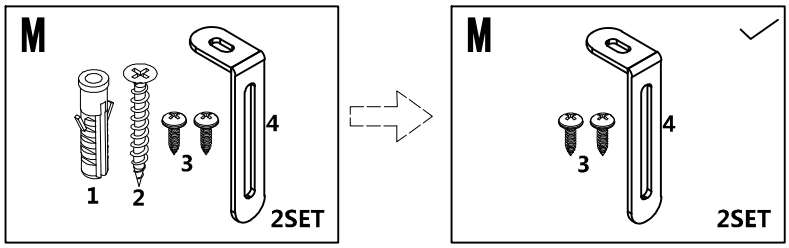


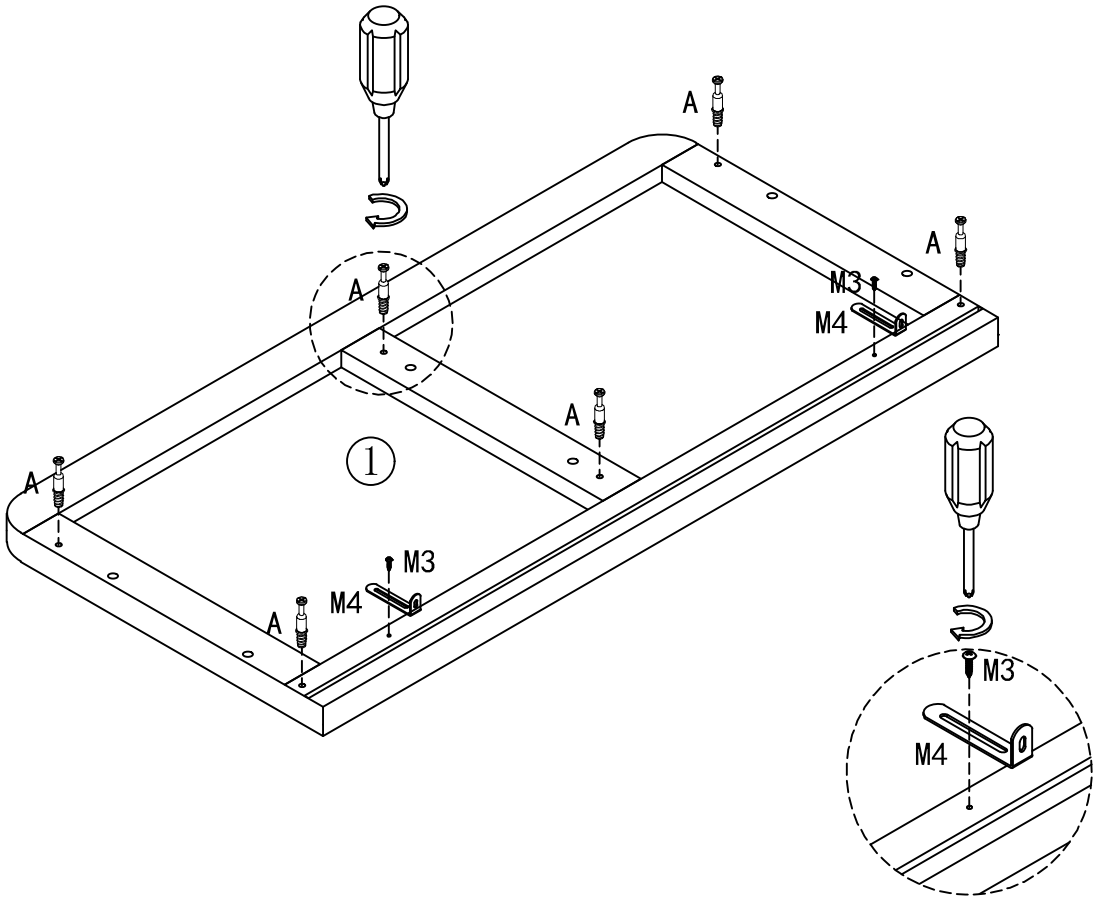


Note: Put the anti-tip device M4
on the top, near theback side,
and fix it with a screw M3.

| | |
|---|---|
|  | A X 6PCS |
| 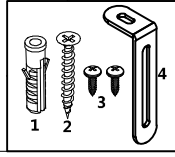 | M X 2SET |

STEP 14

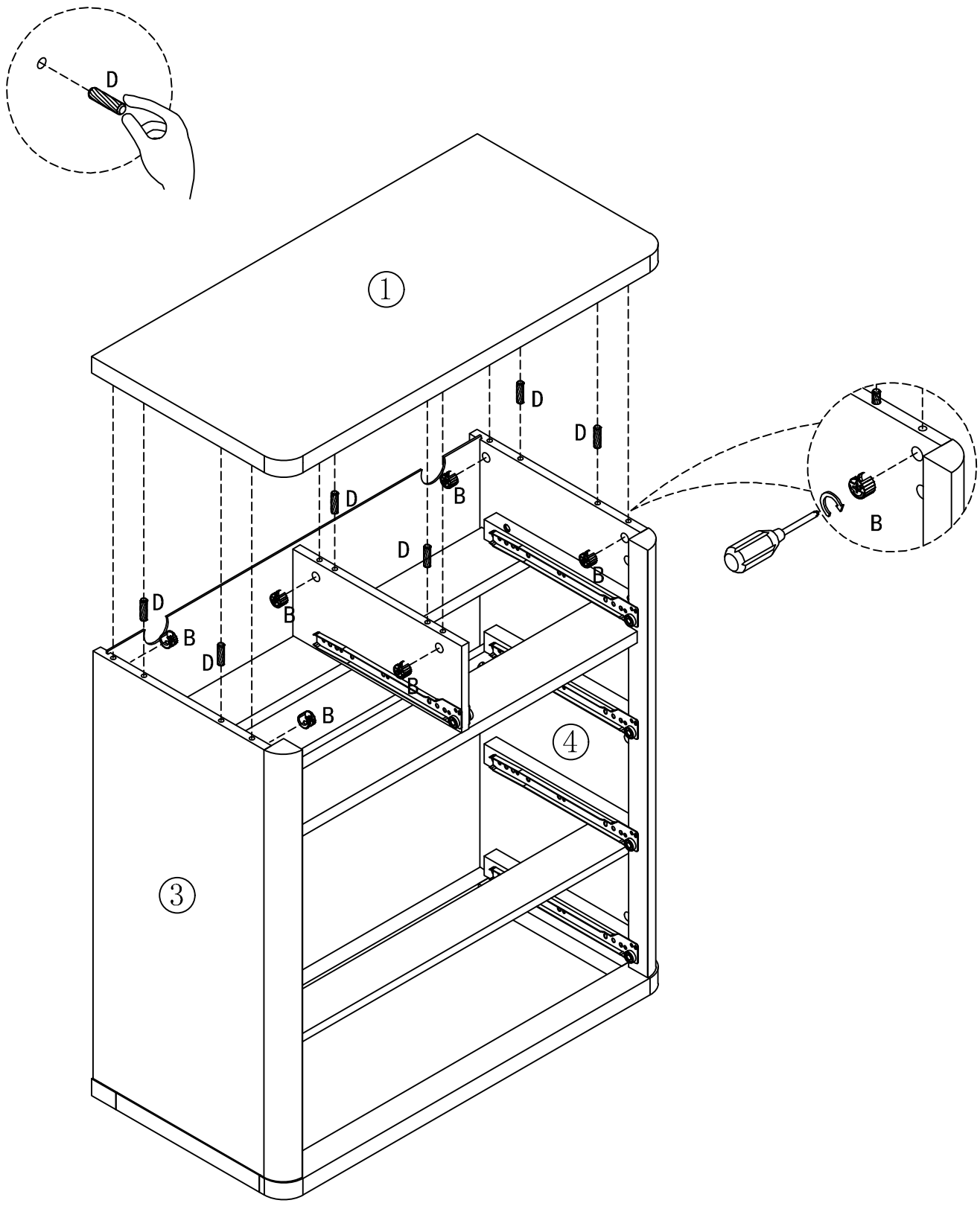


| | |
|---|---|
| | B X 6PCS |
| | D X 6PCS |

STEP 15

NOTE:To prevent the cabinet from wobbling
please be sure to install the back panel fasteners.

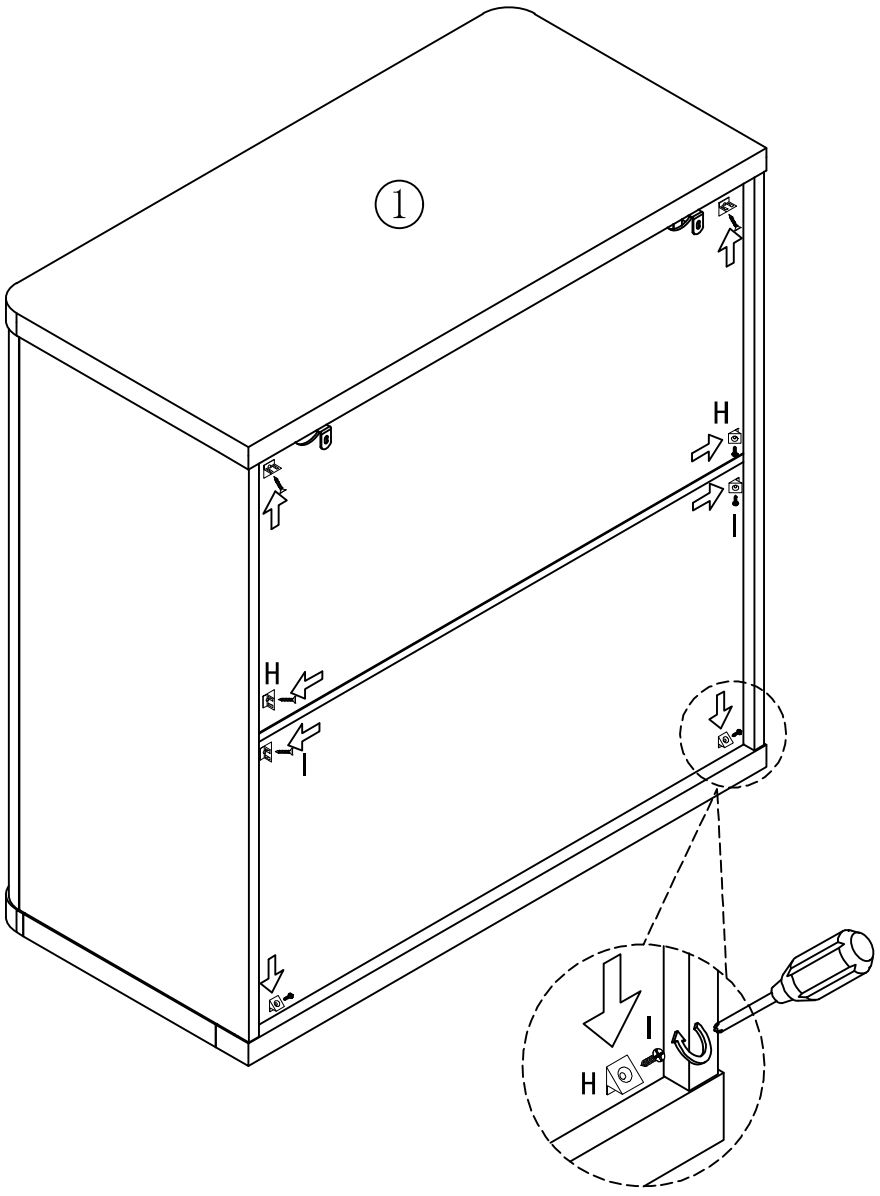


| | |
|---|---|
|  | H X 8PCS |
|  | I X 8PCS |

STEP 16

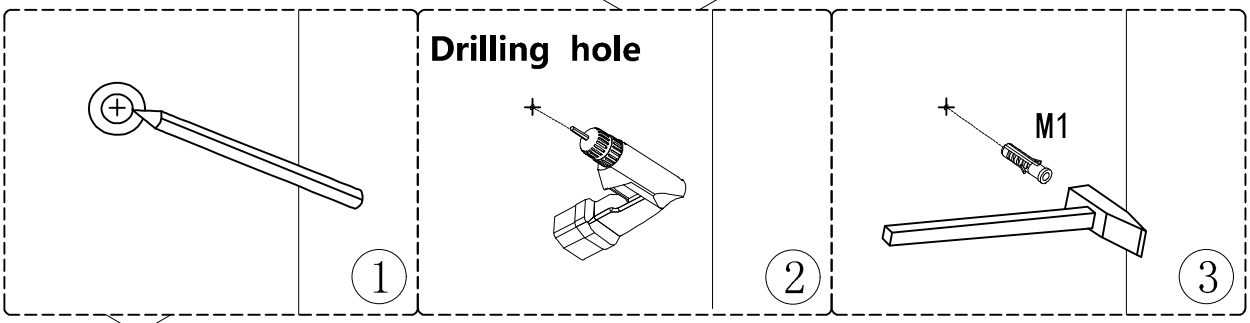


Drill a hole in the wall, then hammer the M1 into the wall with a hammer

WALL

Note: Follow step
Link M4 and M1 with a M2 using a screwdriver,and assembly it tightly.

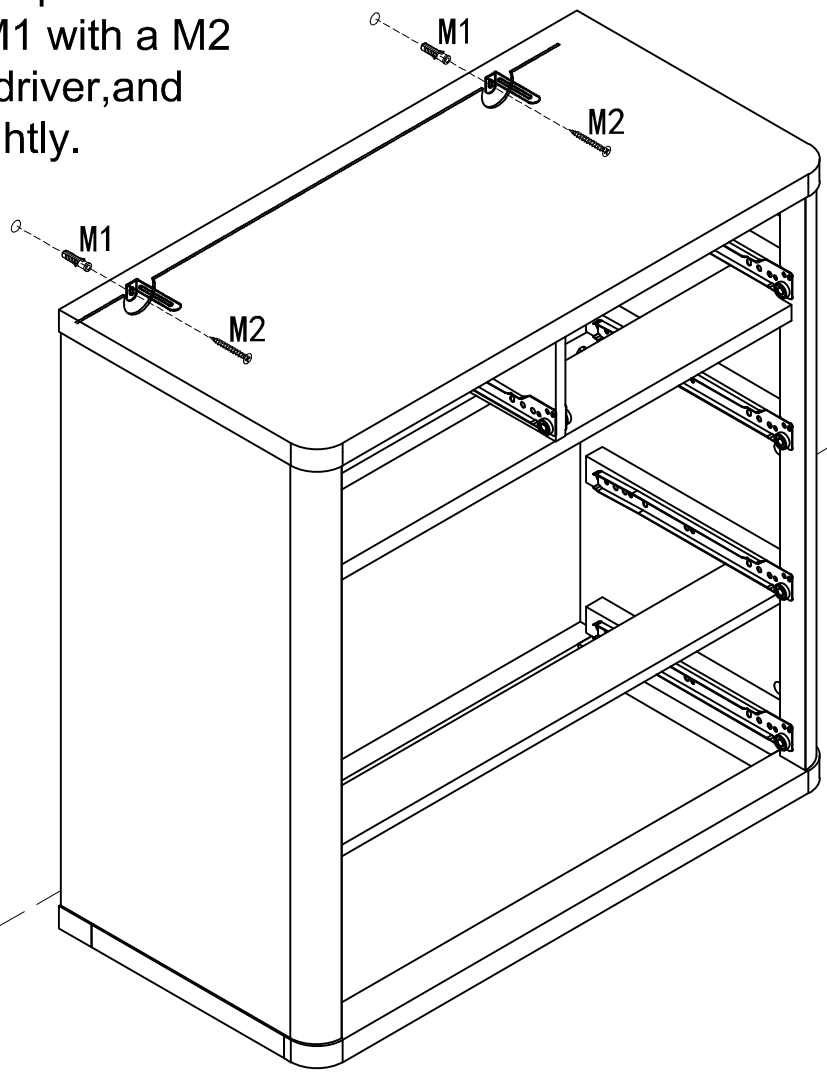


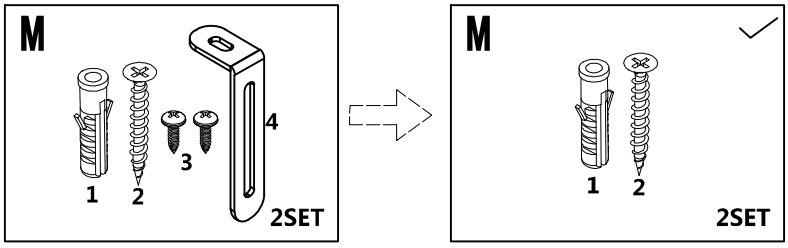

STEP 17

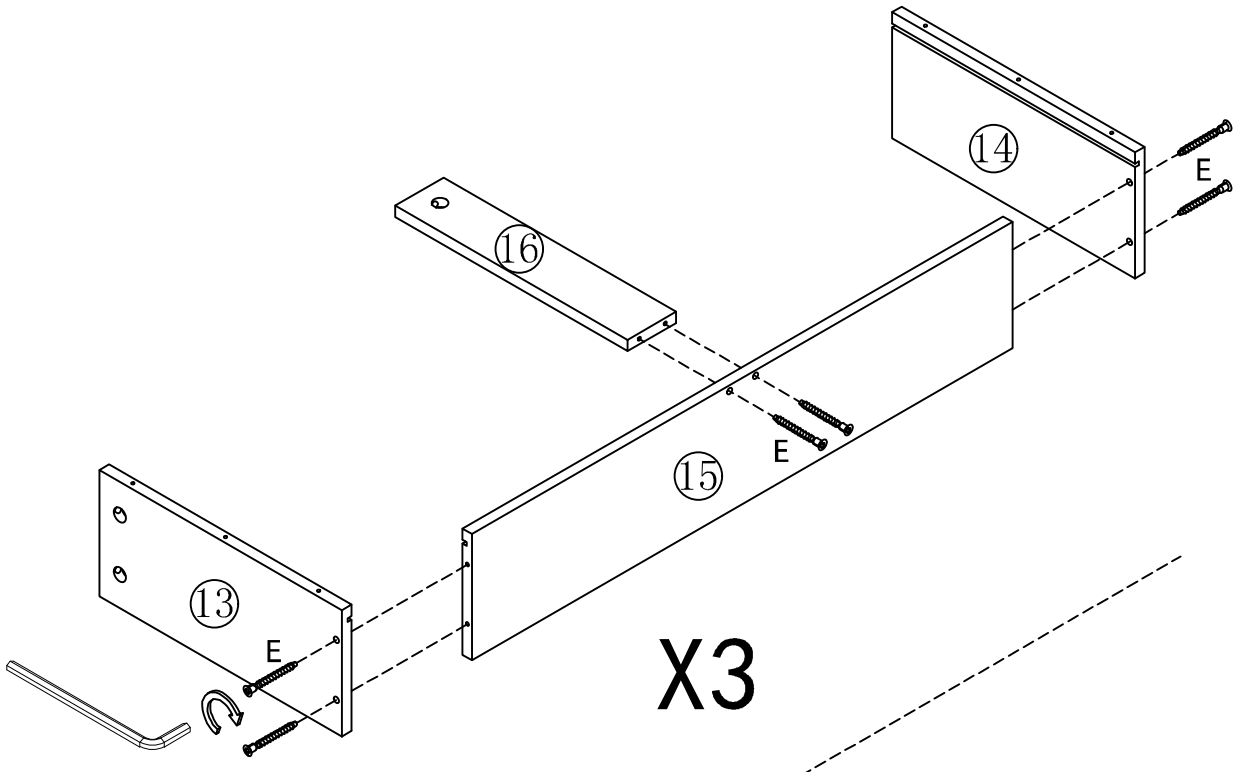


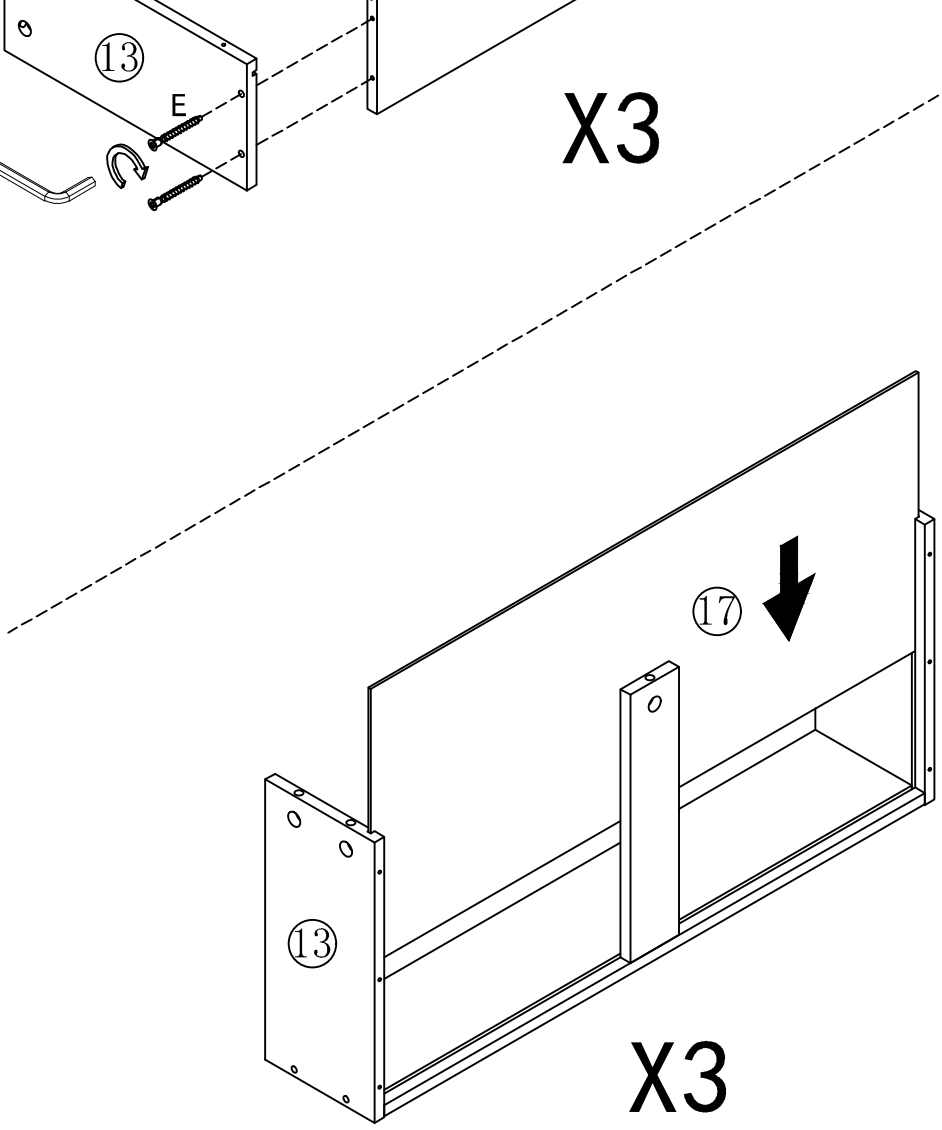


| | |
|---|---|
| | E X 18PCS |

STEP 18

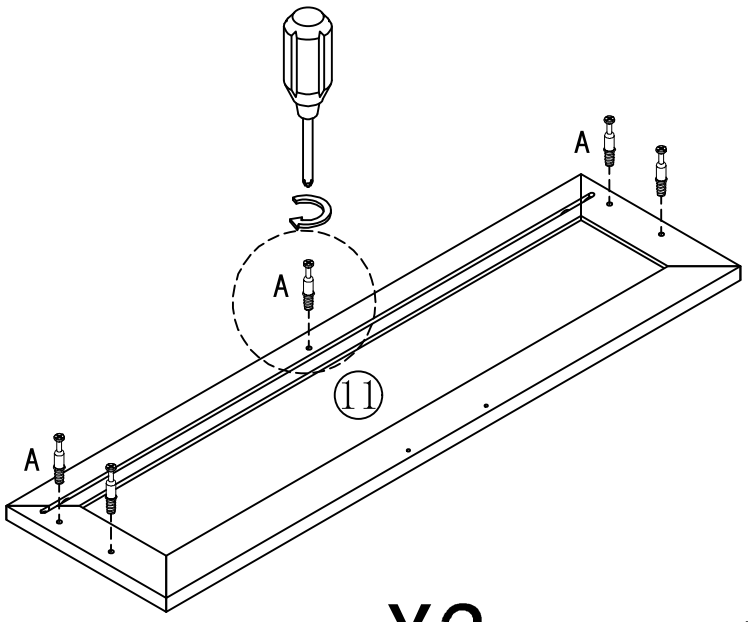


X3

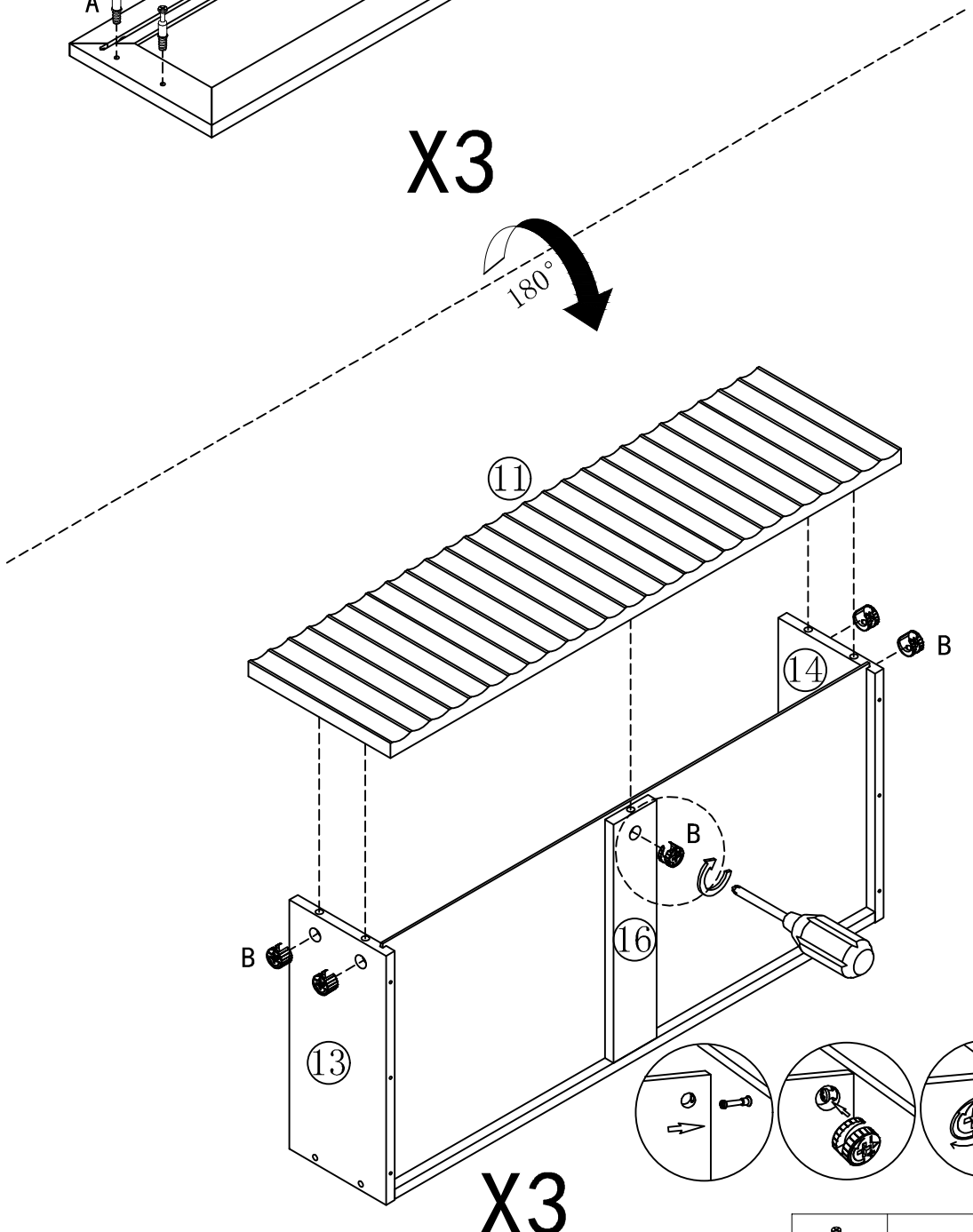


X3

| | |
|---|---|
| | A X 15PCS |
| | B X 15PCS |

STEP 19

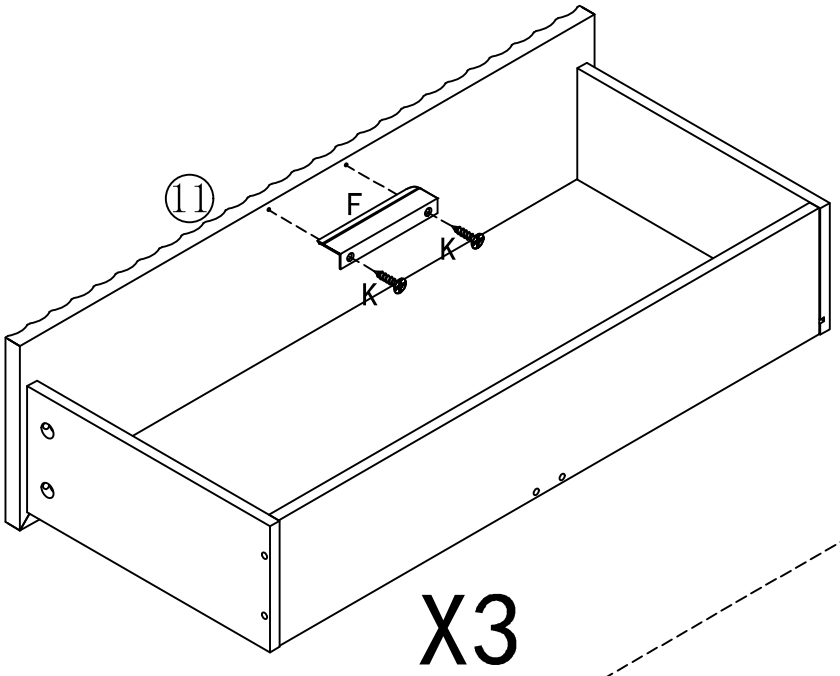


X3

Pay attention to
the hole position.

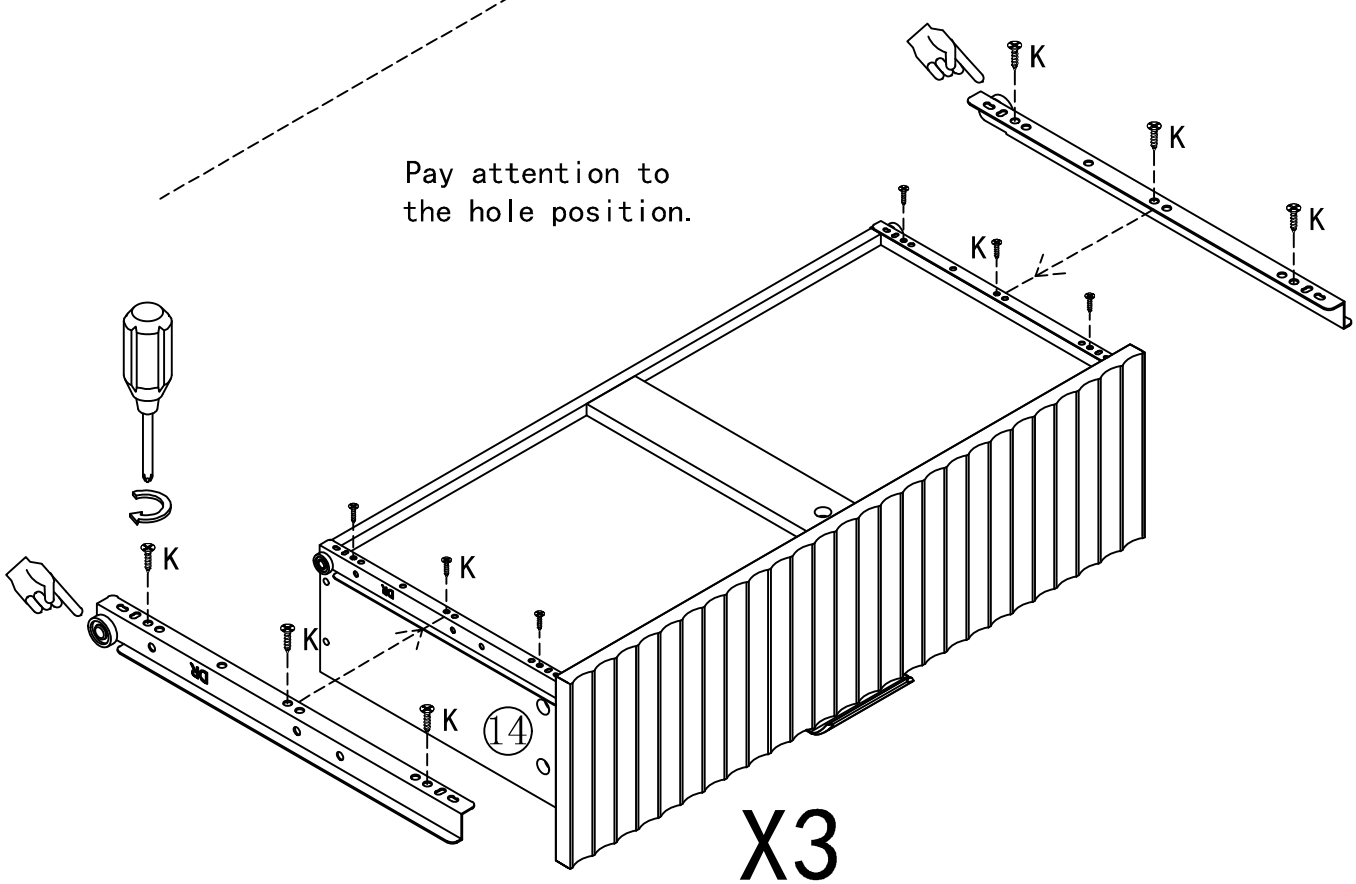


X3

| | |
|---|---|
| | F X 3PCS |
| | K X 24PCS |

STEP 20

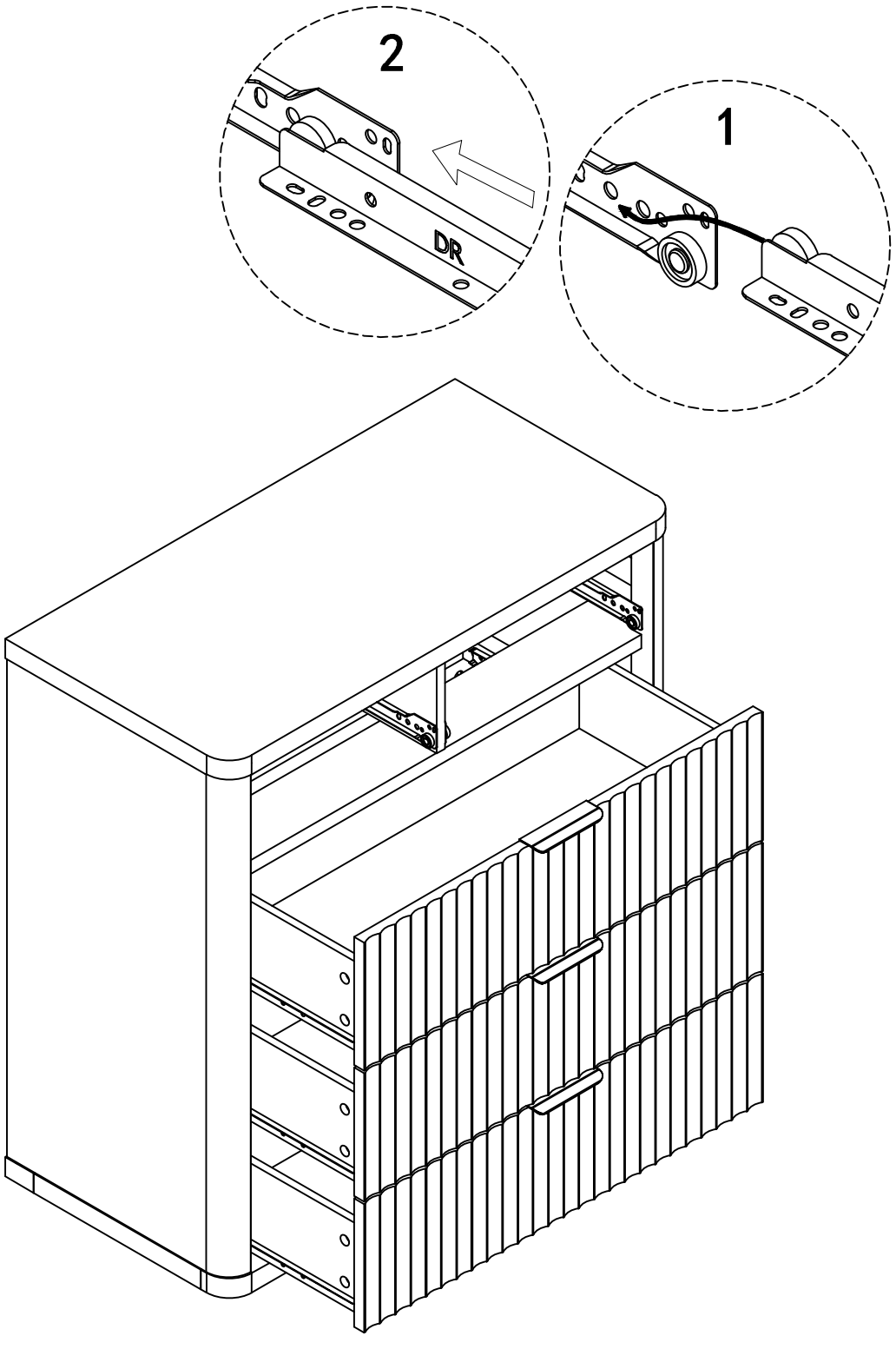

STEP 21

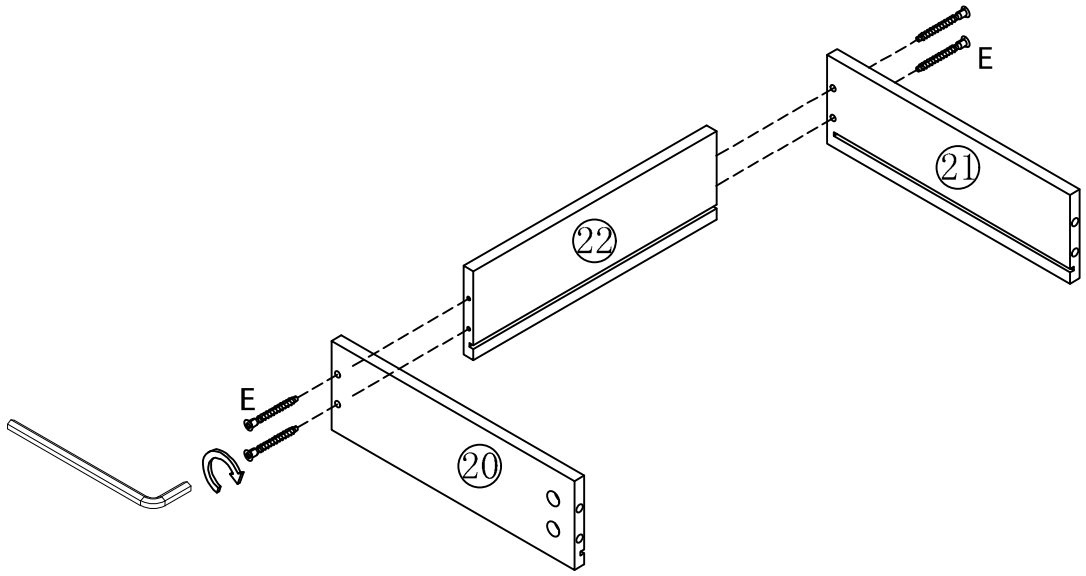


X2

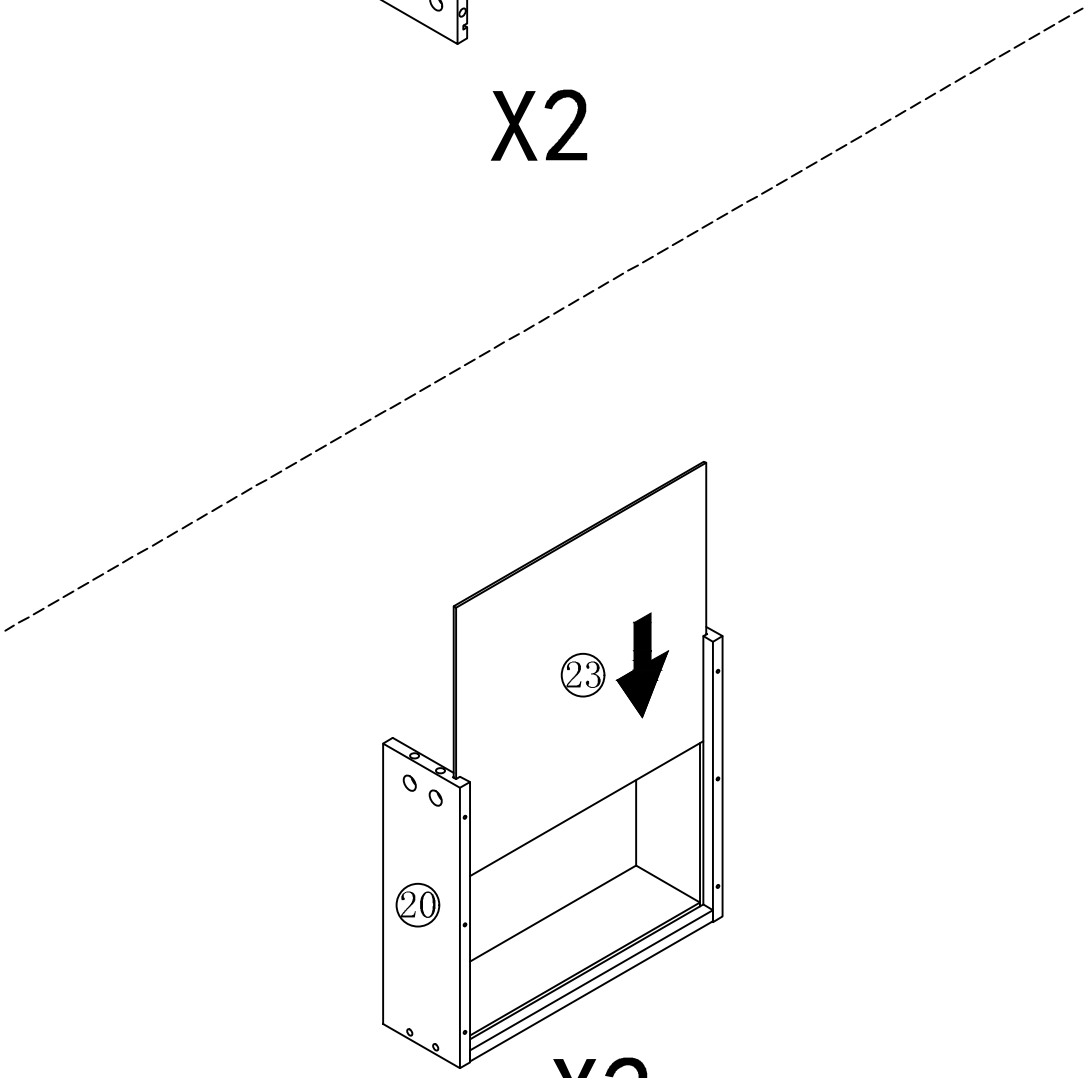


X2

| | |
|---|---|
| | E X 8PCS |

STEP 22

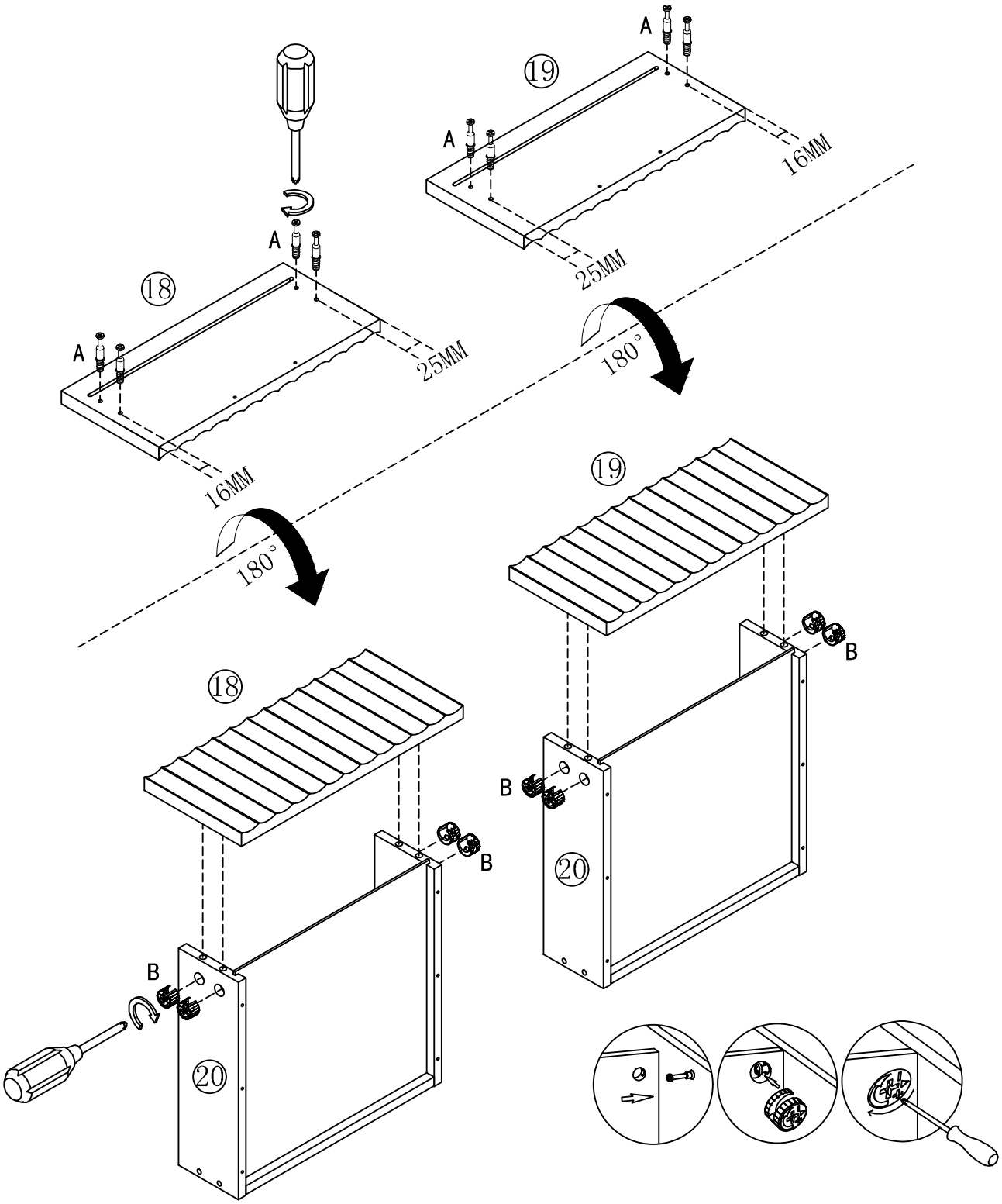


| | |
|---|---|
| | A X 8PCS |
| | B X 8PCS |

# STEP 23

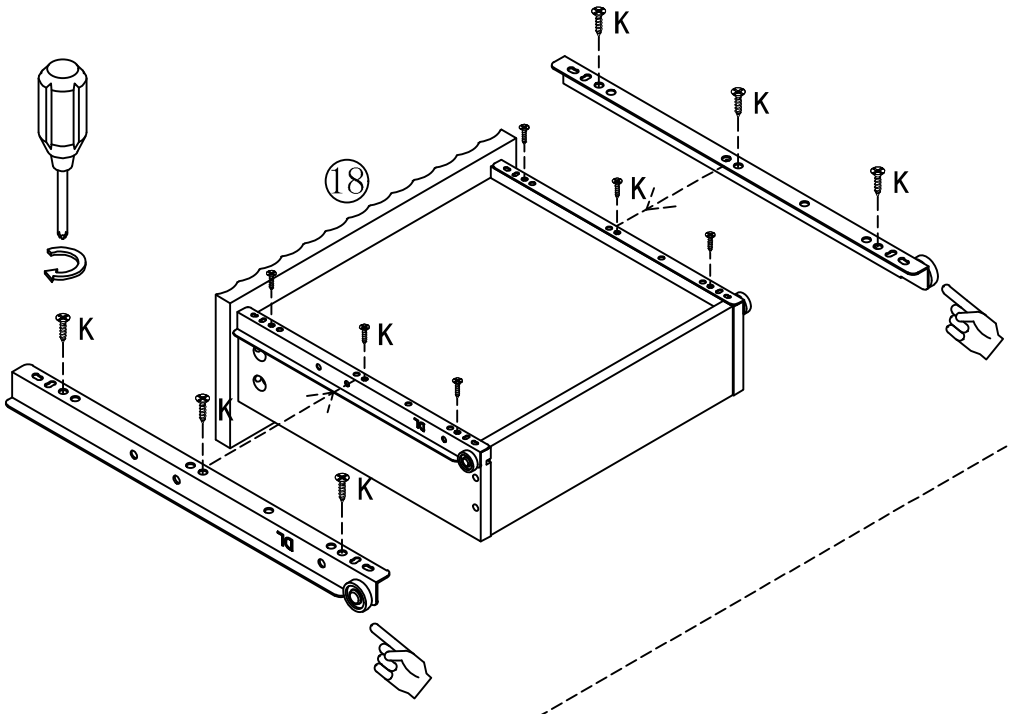


Pay attention to
the hole position.

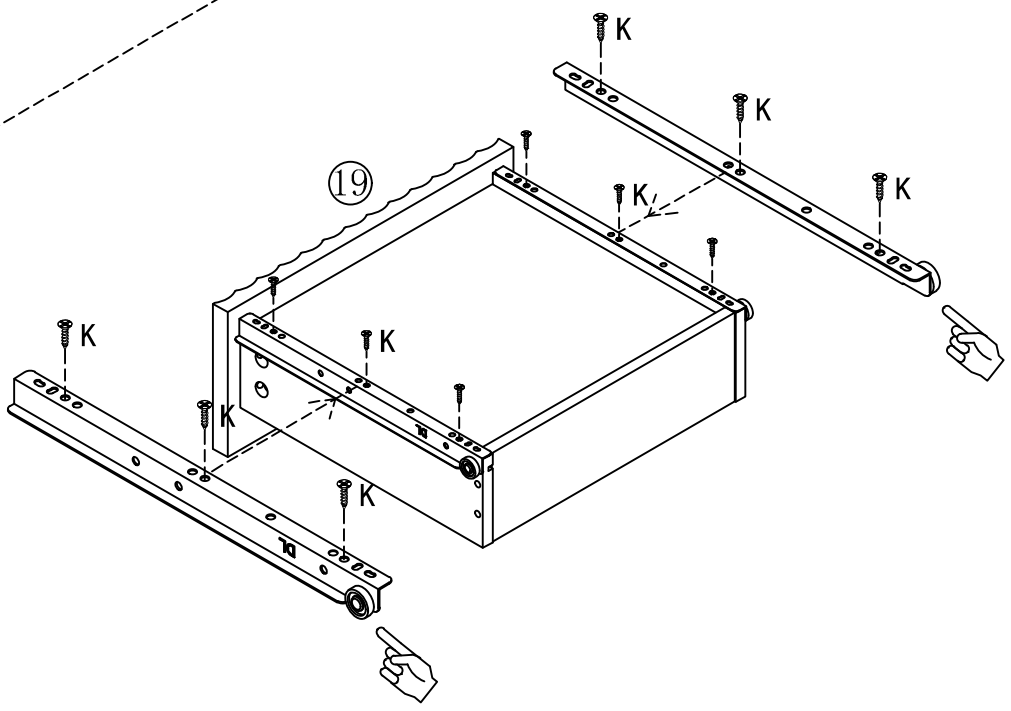


| | |
|---|---|
| | K X 12PCS |

STEP 24

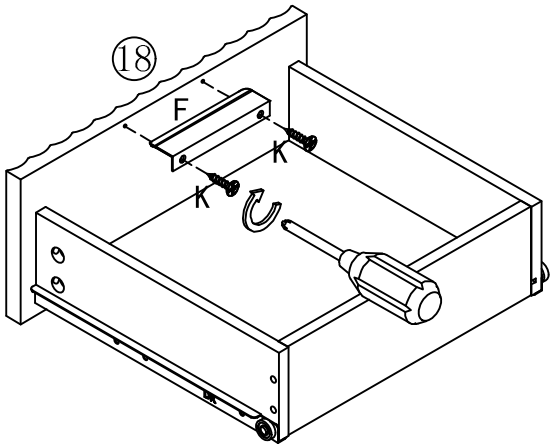


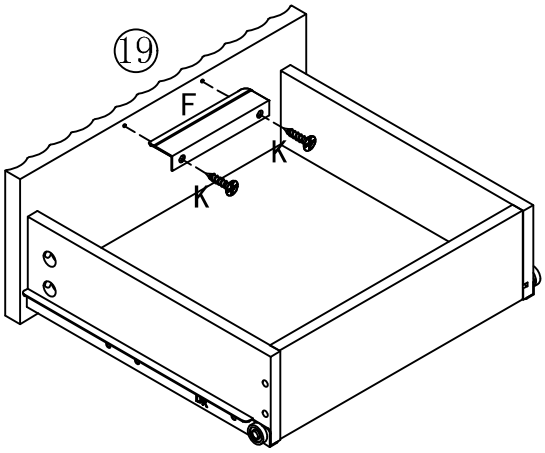


| | |
|---|---|
| | F X 2PCS |
| | K X 4PCS |

# STEP 25

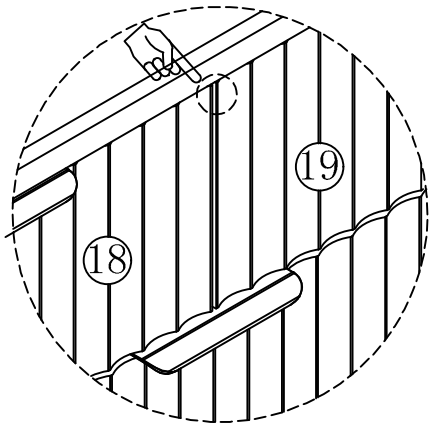


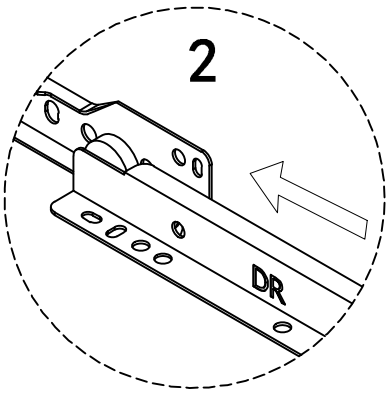


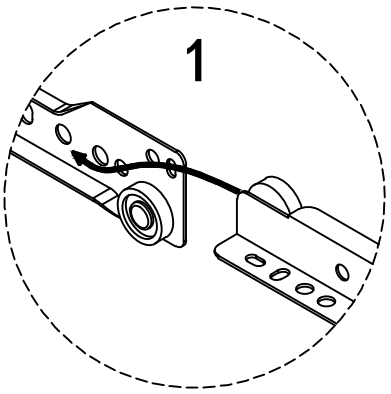


Note: Please insert the drawer into the corresponding position according to the number

