End Table

Assembly Instructions - Please keep for future reference

⚠ NOTE:

Comes with TWO PACKAGES with TWO TRACKINGS,may NOT be delivered at the same time.

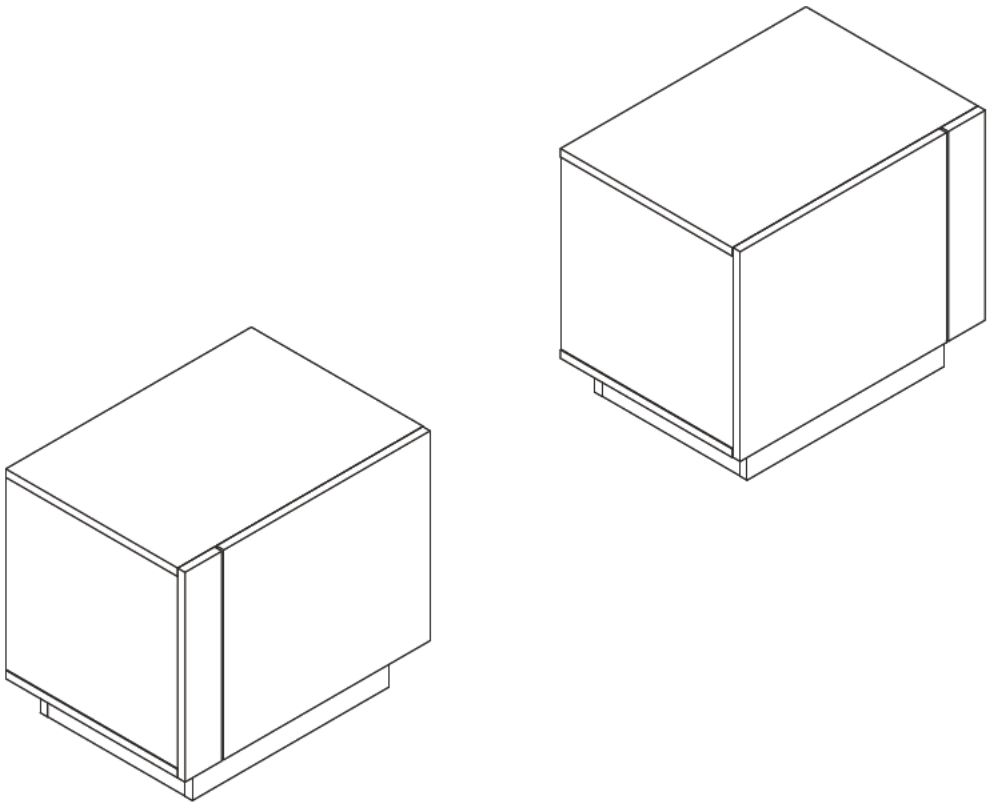

Dimensions

Width - 19.7inch
Depth - 14.4inch
Height - 17.5inch

Important – Please read these instructions fully before starting assembly

Issue 1 -20/12/2022

Safety and Care Advice

Important – Please read these instructions fully before starting assembly

• Check you have all the components and tools listed on the following pages.

• Remove all fittings from the plastic bags and separate them into their groups.

• Keep children and animals away from the work area, small parts could choke if swallowed.

• Make sure you have enough space to layout the parts before starting.

• During assembly do not stand or put weight on the product, this could cause damage.

• Assemble the item as close to its final position (in the same room) as possible.

• Assemble on a soft level surface to avoid damaging the unit or your floor.

• Parts of the assembly will be easier with 2 people.



• To reduce the likelihood of damaging your product please ensure that your power drill is set on a low torque setting.

Care and maintenance

• Only clean using a damp cloth and mild detergent, do no use bleach or abrasive cleaners.

• From time to time check that there are no loose screws on this unit.

• This product should not be discarded with household waste. Take to your local authority waste disposal centre.

Handy Hints

• Assemble all parts and bolts loosely during assembly, only once the product is complete should you fully tighten the bolts

• Regularly check and ensure that all bolts and fittings are tightend properly.

Components - Panels

Please check you have all the panels listed below

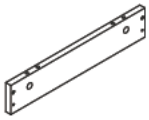

1 (40 x 7.5 x 1.5cm) x 4

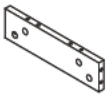

2 (28 x 7.5 x 1.5cm) x 4

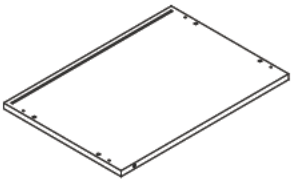

3 (50 x 35 x 1.5cm) x 1

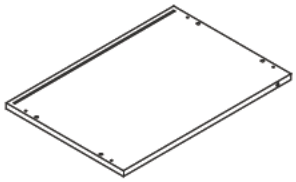

4 (50 x35 x 1.5cm) x 1

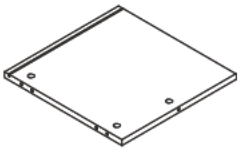

5 (34.9 x34.1 x 1.5cm) x 1

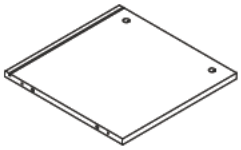

6 (34.9 x 34.1 x 1.5cm) x 1

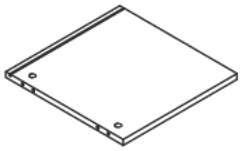

7 (34.9 x 34.1 x 1.5cm) x 1

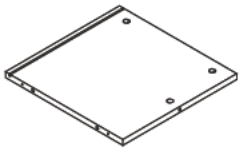

8 (34.9x 34.1 x 1.5cm) x 1

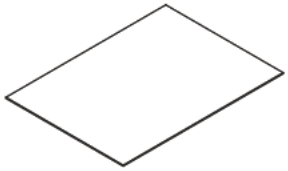

9 (48 x 35 x 0.25cm) x 2

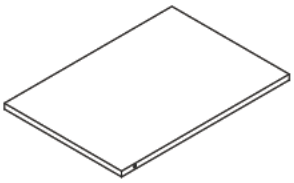

10 (50 x 35 x 1.5cm) x 1

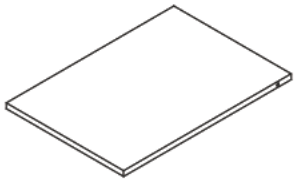

11 (50 x 35 x 1.5cm) x 1

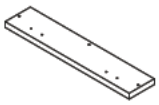

12 (37.1 x 7.5 x 1.5cm) x 2

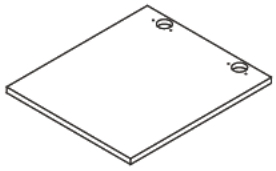

13 (42 x 37.1x 1.5cm) x 2

Components - Fittings

Please check you have all the fittings listed below

Note: The quantities below are the correct amount to complete the assembly. In some cases more fittings may be supplied than are required.

A  8*30mm Wooden Dowel x 40	**B**  7*39mm Cam Bolt x 38	**C**  Cam Lock x 38
D  Protective Feet x 8	**E**  5*40mm Screw x 8	**F**  Hinge x 4
G  3.5*14mm Screw x 16	**H**  3*16mm Back Panel Stiffener x 8	**I**  Door Bumper x 4

Tools required



Phillips screwdriver
(medium & large)

Ruler - Use this ruler to help correctly identify the screws

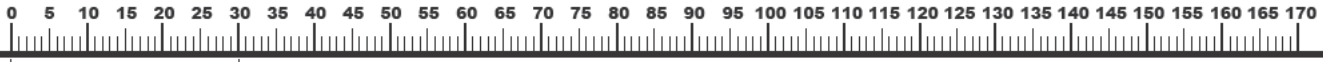

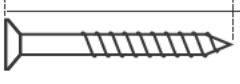

The screws length is measured from the head to the point (30mm screw shown).

Using Camlocks

Step 1

Connect the male camlock as directed in the assembly instructions using a screwdriver.

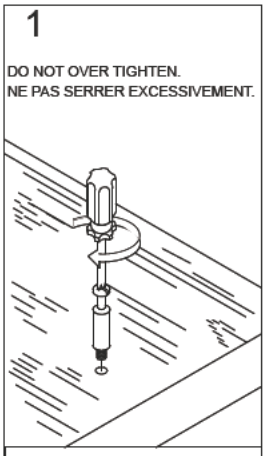

Step 2

Push the male camlock into the entry hole.

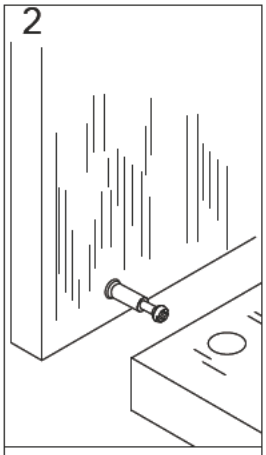

Step 3

Insert the female camlock as shown in the instructions.

Note: ensure that the arrow on the top of the camlock points towards the entry hole for the male camlock.

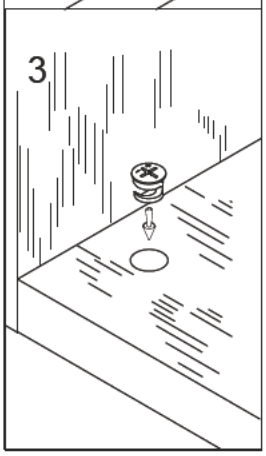

Step 4

Turn the female camlock clockwise with a screwdriver.

You should feel a click when the camlock is locked in place.

The joint is now secure.

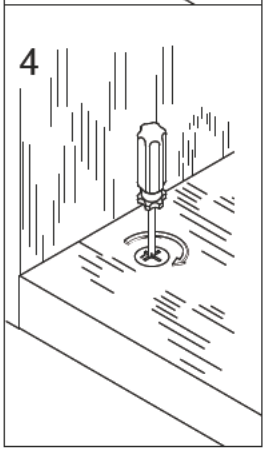

Adjusting Hinges

Hinge adjustment:

a: To move the top panel up or down, loosen screws shown and move top panel to suit

b.To move the top panel in or out, loosen screws shown and move top panel to suit.

Retighten screws

C:To move the top panel left or right, adjust screws shown.

a:

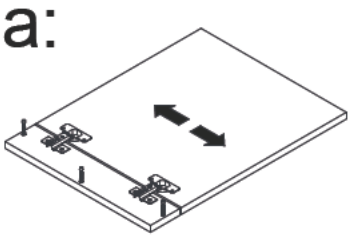

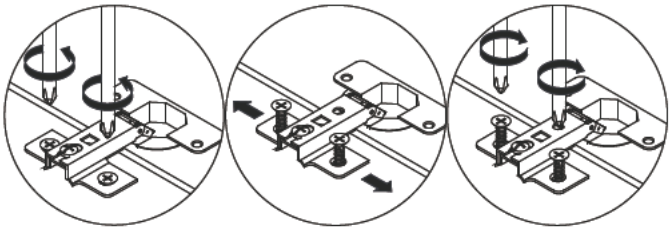

b:

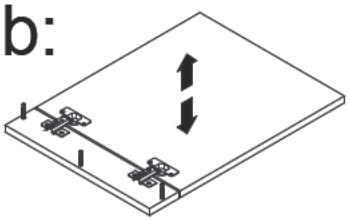

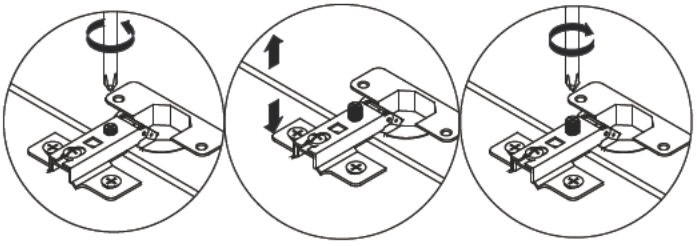

c:

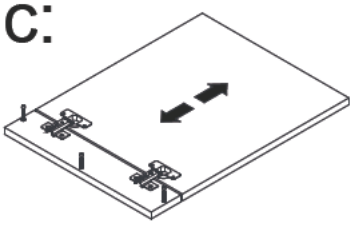

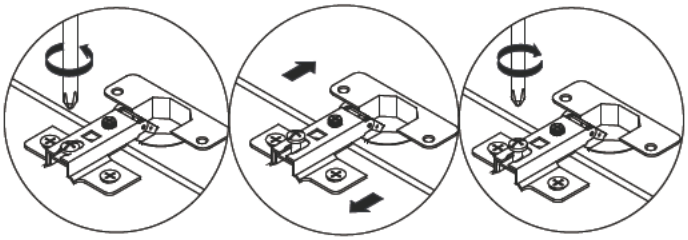

Assembly Instructions

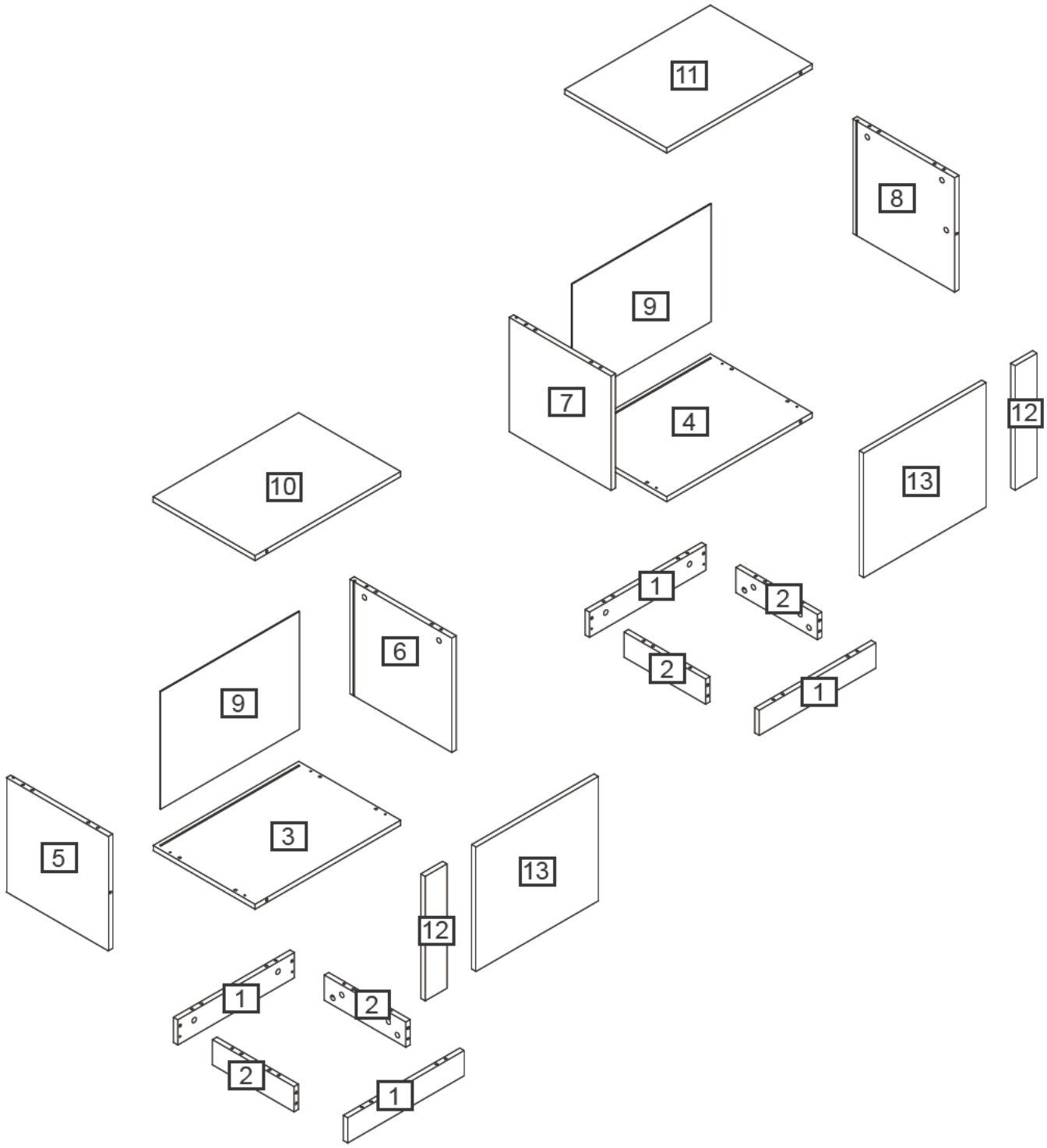

Assembly Instructions

Step 1

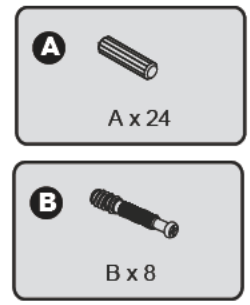

CAM-LOCK
Tighten until shoulder is flush with panel.Do not overtighten or undertighten(see example below)

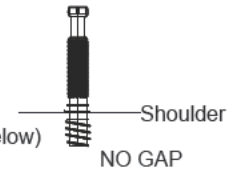

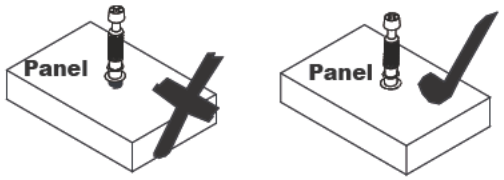

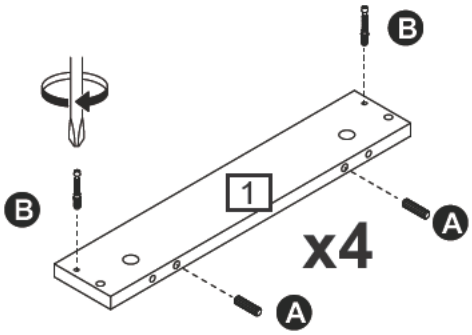

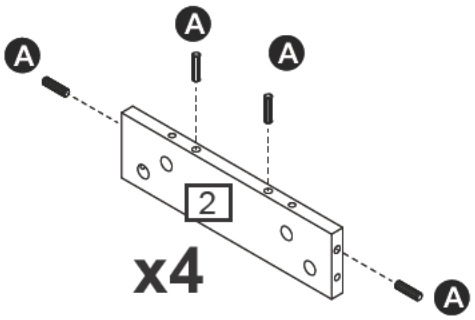

Insert wooden dowel (A) into part (1, 2).
Attach cam bolt (B) to part (1, 2) with a screwdriver.

Step 2



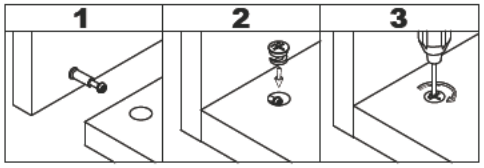

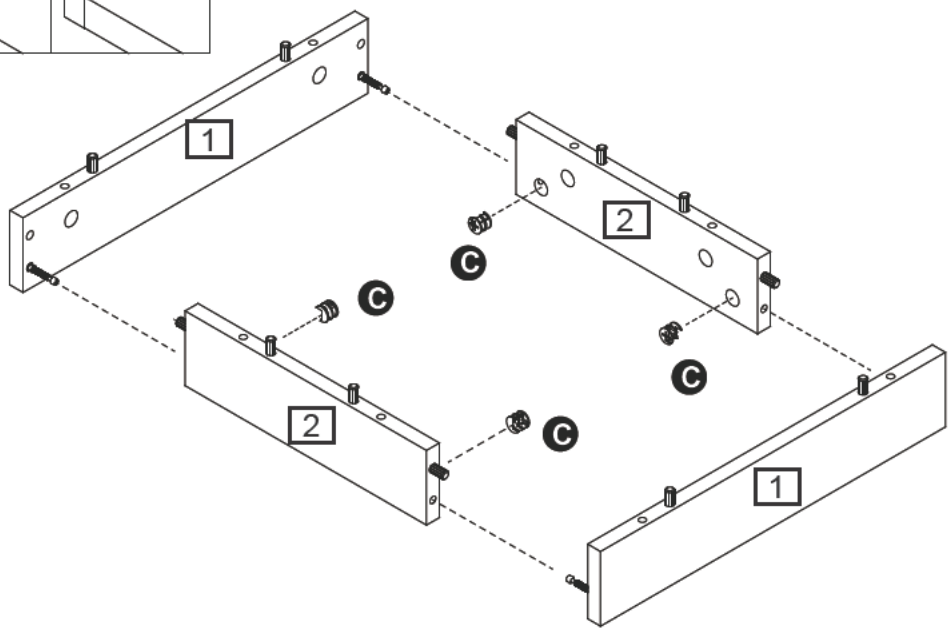

Attach part (1) to part (2), then insert and secure cam lock (C) to part (2) to lock them.

Assembly Instructions

Step 3

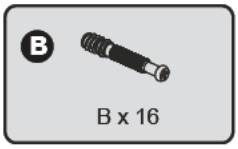

CAM-LOCK
Tighten until shoulder is flush with panel.Do not overtighten or undertighten(see example below)

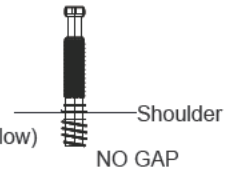

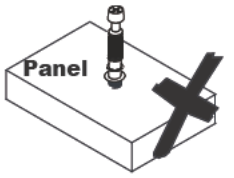

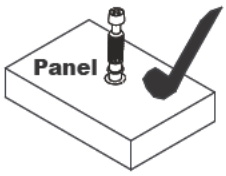

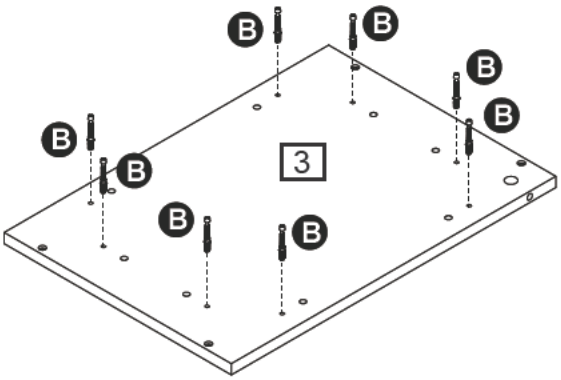

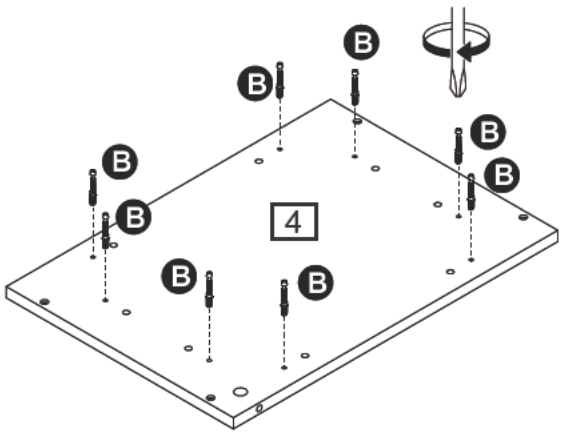

Attach cam bolt (B) to part (3, 4) with a screwdriver.

Step 4

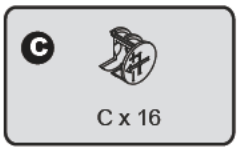

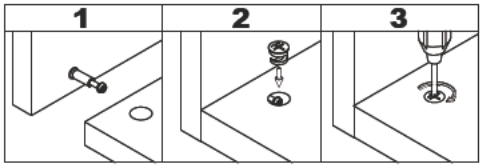

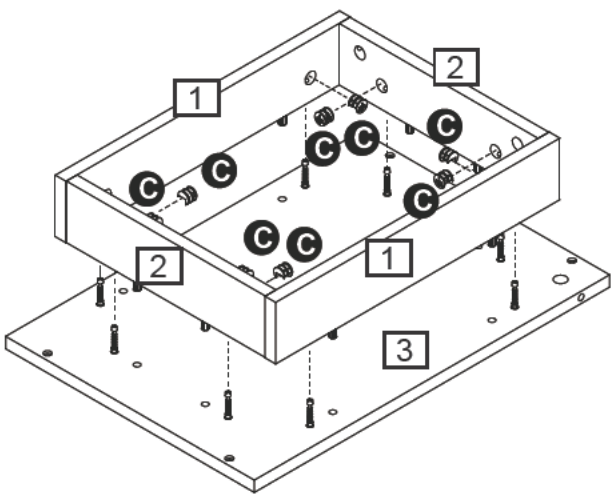

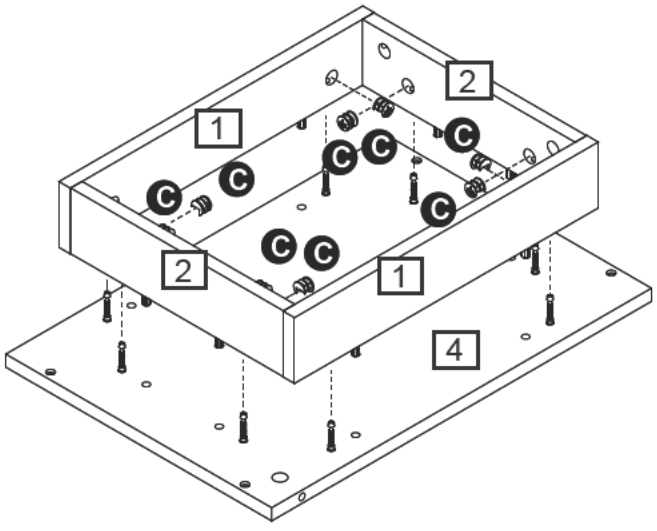

Attach part (1, 2) to part (3), then insert and secure cam lock (C) to part (1, 2) to lock them. Then, attach part (1, 2) to part (4), then insert and secure cam lock (C) to part (1, 2) to lock them.

Assembly Instructions

Step 5



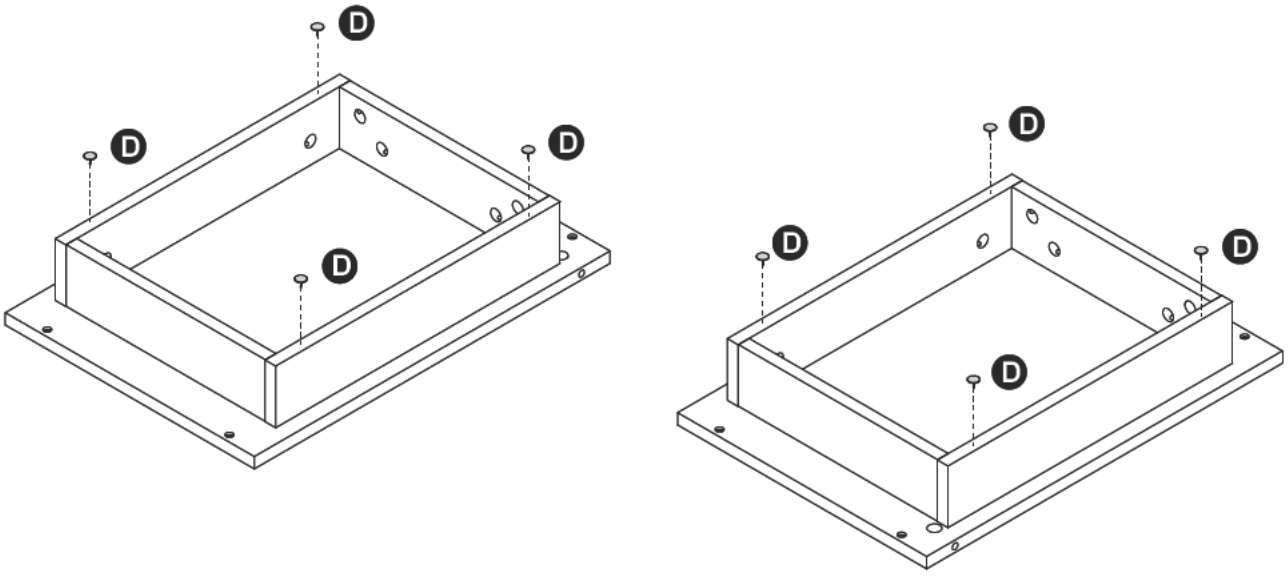

Insert protective feet (D) into part (1, 2).

Step 6

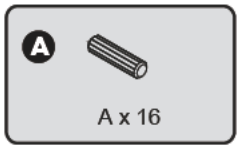

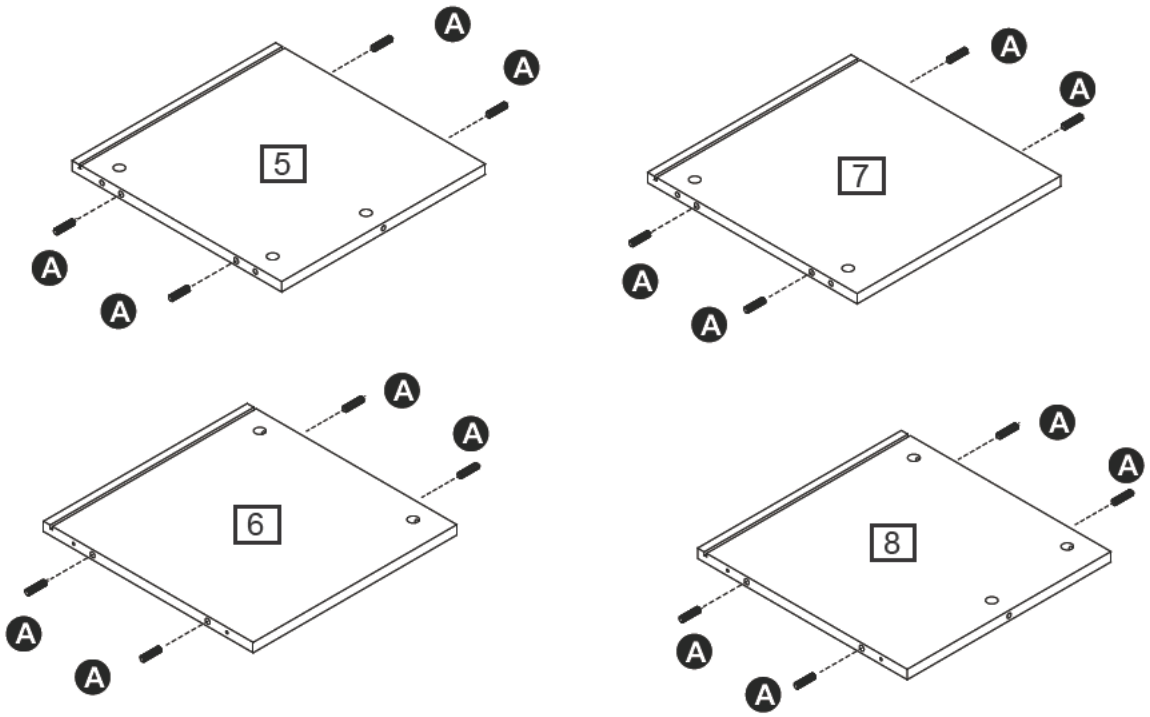

Insert wooden dowel (A) into part (5, 6, 7, 8).

Assembly Instructions

Step 7

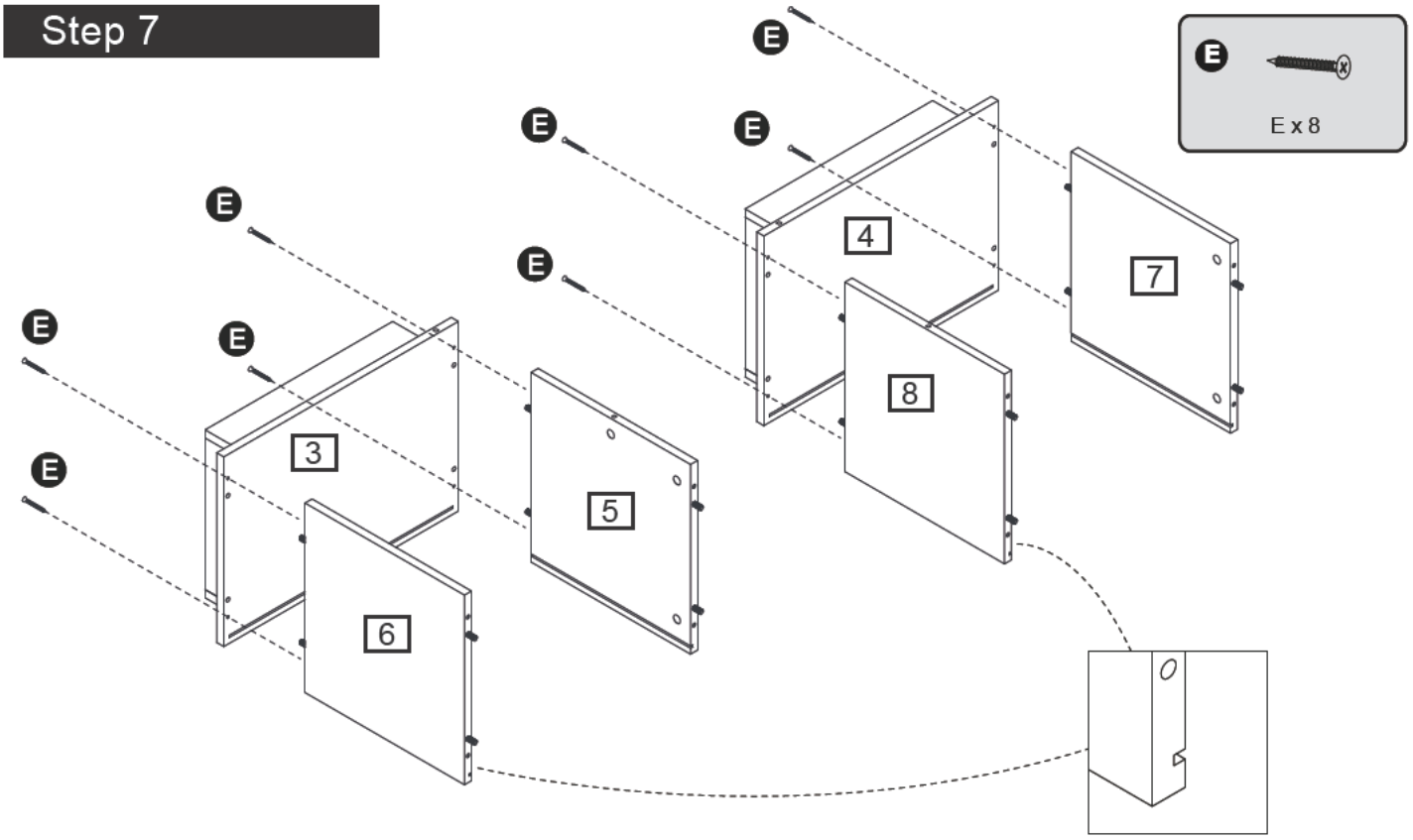

IAttach part (5, 6) to part (3), and attach part (7, 8) to part (4) using screw (E) with a screwdriver.

Step 8

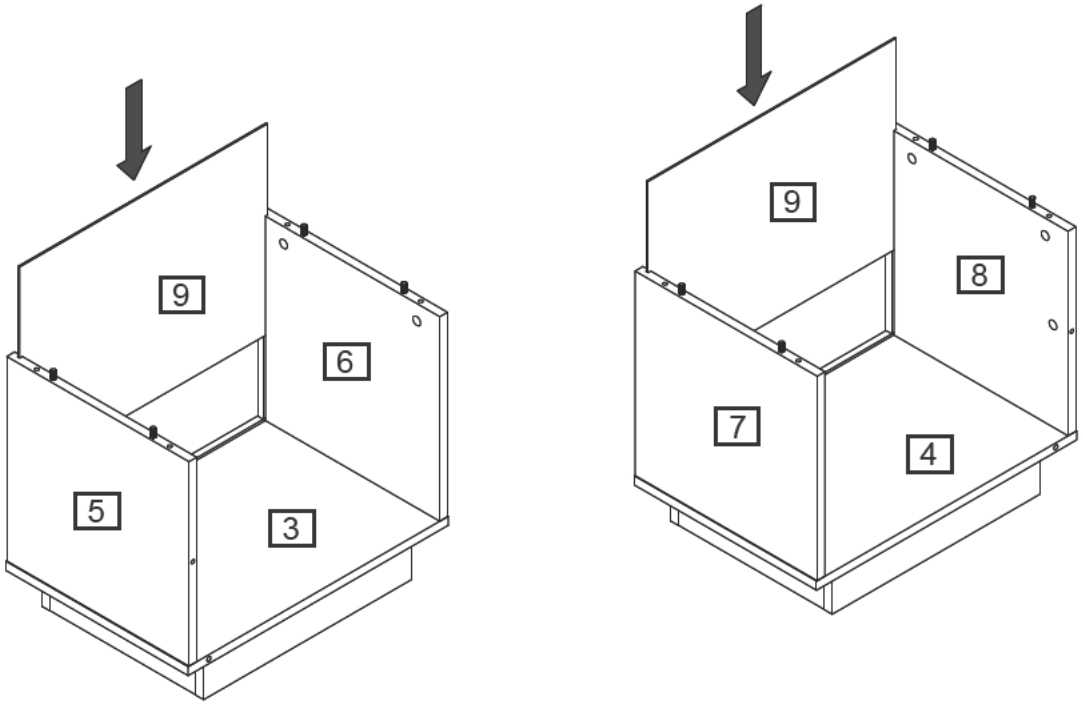

Slide the back panels (9) into grooves as per diagram.

Assembly Instructions

Step 9

CAM-LOCK
Tighten until shoulder is flush with panel.Do not overtighten or undertighten(see example below)

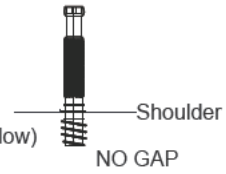

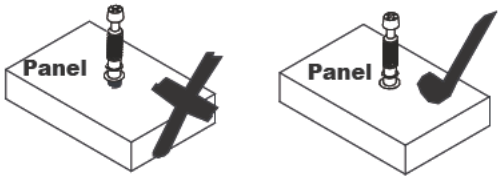

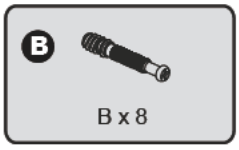

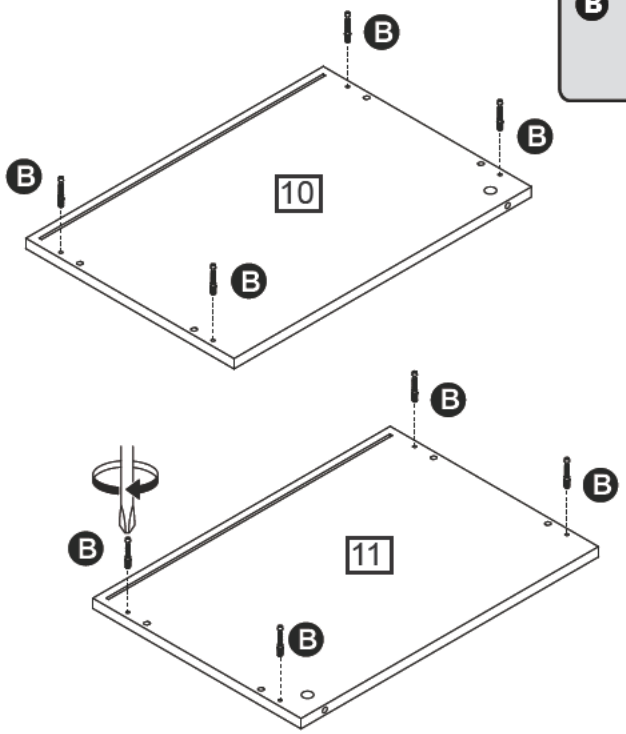

Attach cam bolt (B) to part (10, 11) with a screwdriver.

Step 10

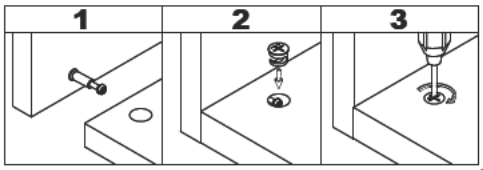



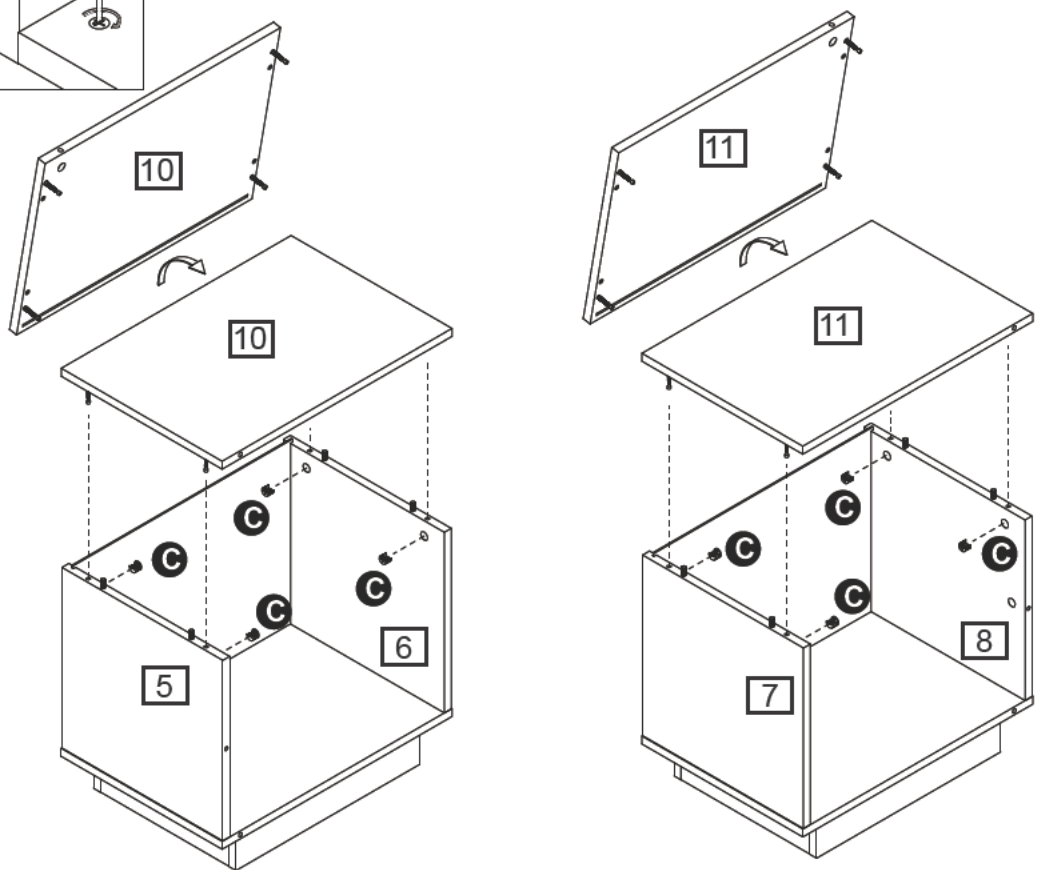

Attach part (10) to part (5, 6), then insert and secure cam lock (C) to part (5, 6) to lock them.
Attach part (11) to part (7, 8), then insert and secure cam lock (C) to part (7, 8) to lock them.

Assembly Instructions

Step 11



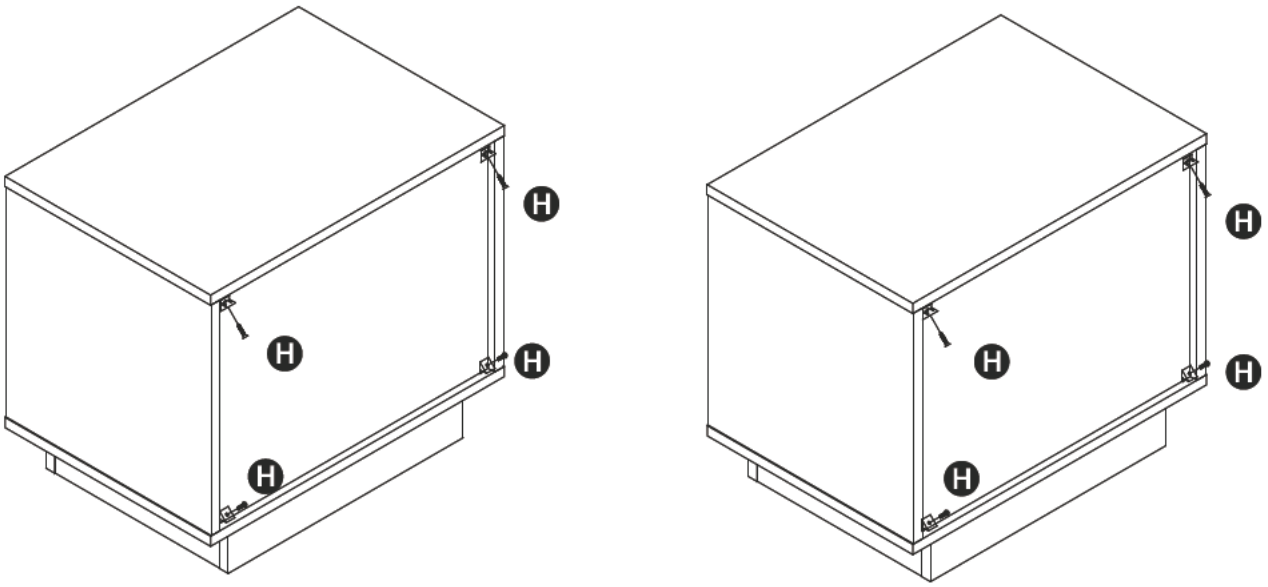

Attach plastic wedge (H) to back panels (9) using screws with a screwdriver.

Step 12

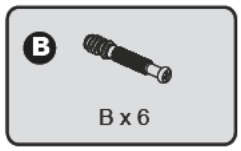

CAM-LOCK
Tighten until shoulder is flush with panel.Do not overtighten or undertighten(see example below)

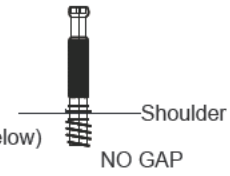

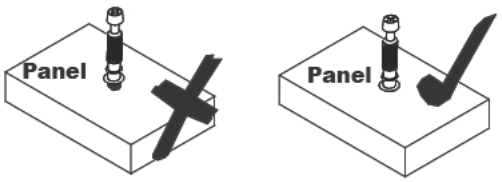

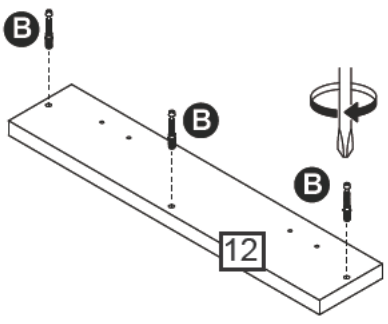

x2

Attach cam bolt (B) to part (12) with a screwdriver.

Assembly Instructions

Step 13

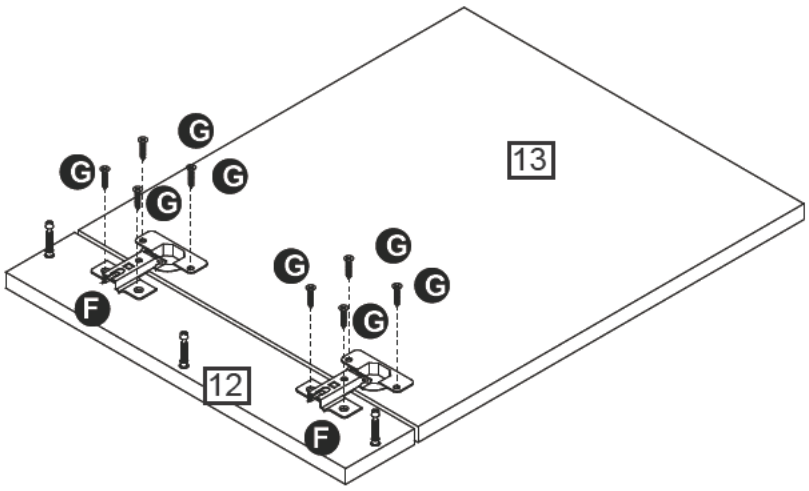

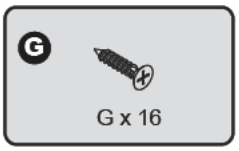

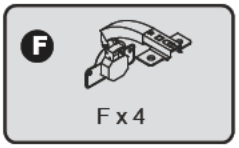

x2

Use screws (G) to secure hinges (F) to door (13), and then secure hings (F) to part (12) with a screwdriver.

Step 14

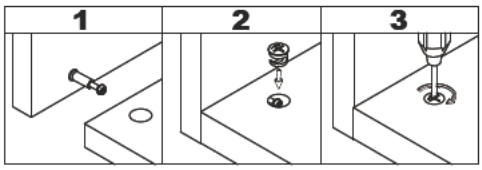

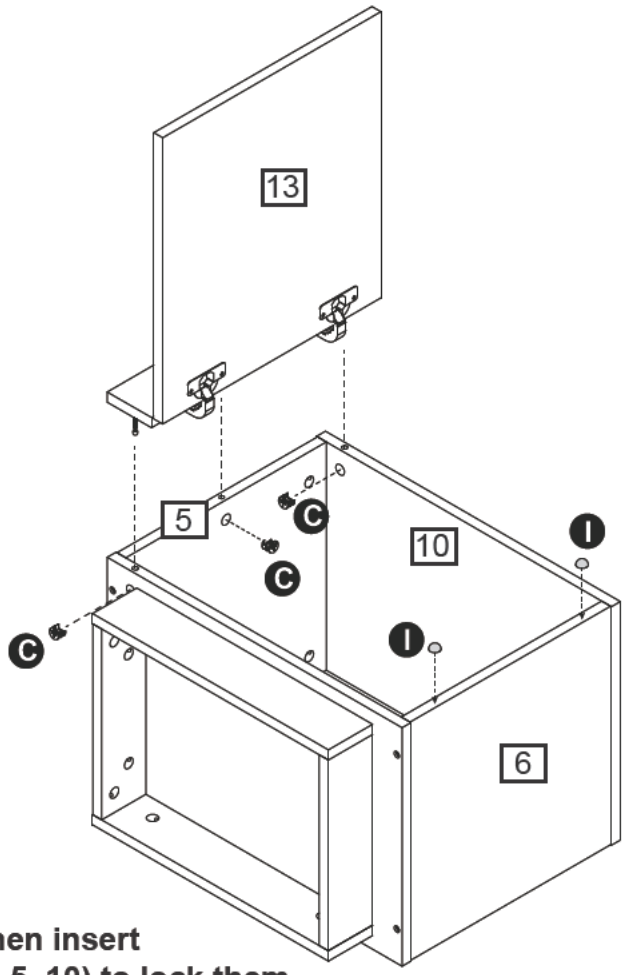



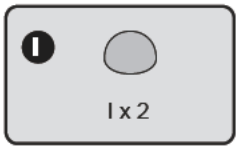

Attach part (12) to part (3, 5, 10), then insert and secure cam lock (C) to part (3, 5, 10) to lock them.
Attach door bumpers (I) to part(6).
You may refer to page 4 about how to adjust hinge.

Assembly Instructions

Step 15

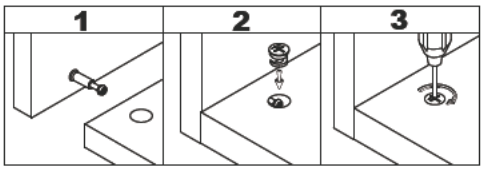

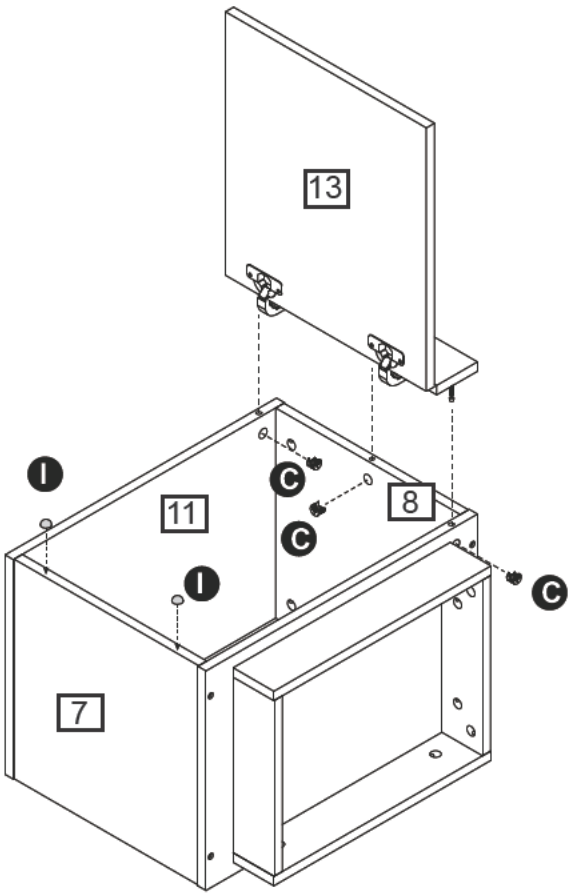



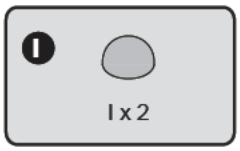

Attach part (12) to part (4, 8, 11), then
insert and secure cam lock (C) to part (4, 8, 11) to lock them.
Attach door bumpers (I) to part(7).
You may refer to page 4 about how to adjust hinge.

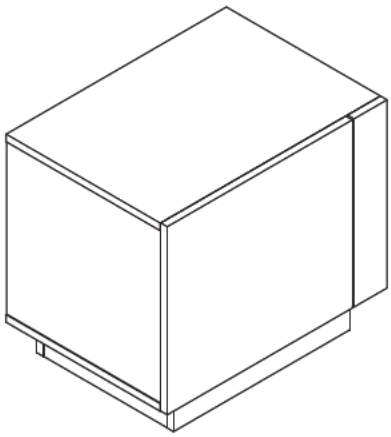

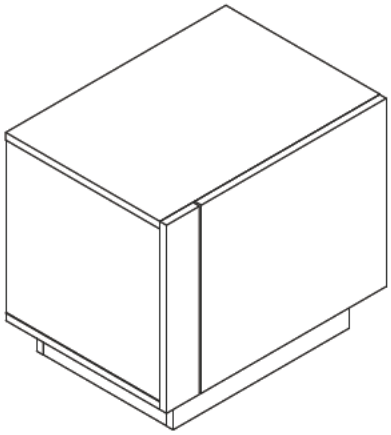

Assembly is complete.