sideboard

Product ID. 7ATRB

Scan for Support
support@garvee.com

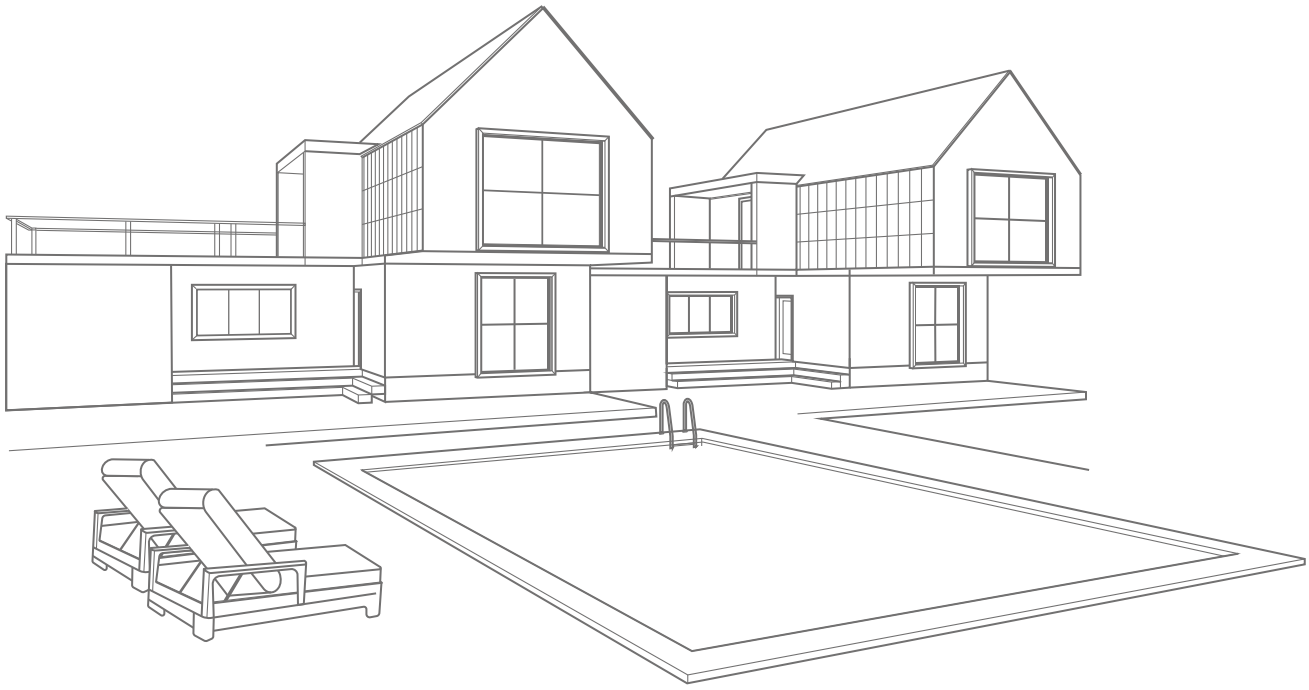

Distributed by
GARVEE.com

SKU: PHO_34Q3DYA4

LOT NO.: XW-NO.1

Garveehome Assembly Instruction

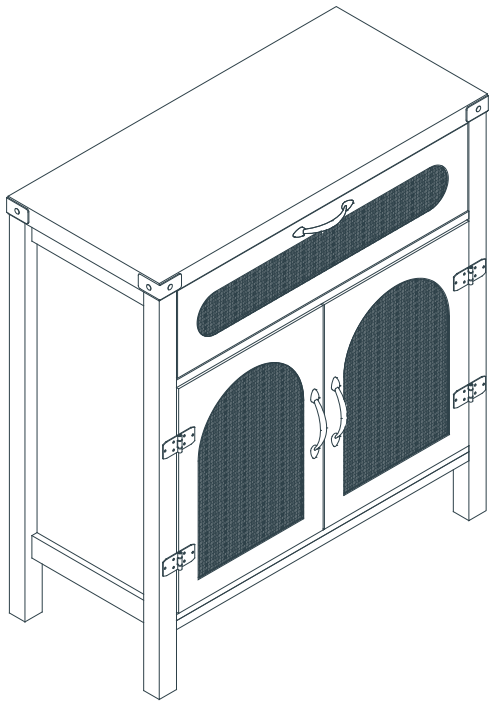

Team Assembly Recommended

Trouble shooting:

Missing / Wrong / Broken parts and installation issues

↓

Send email with your question, pic and order NO. to ***support@garvee.com***

↓

Respond within 24 hours

↓

Issue resolved

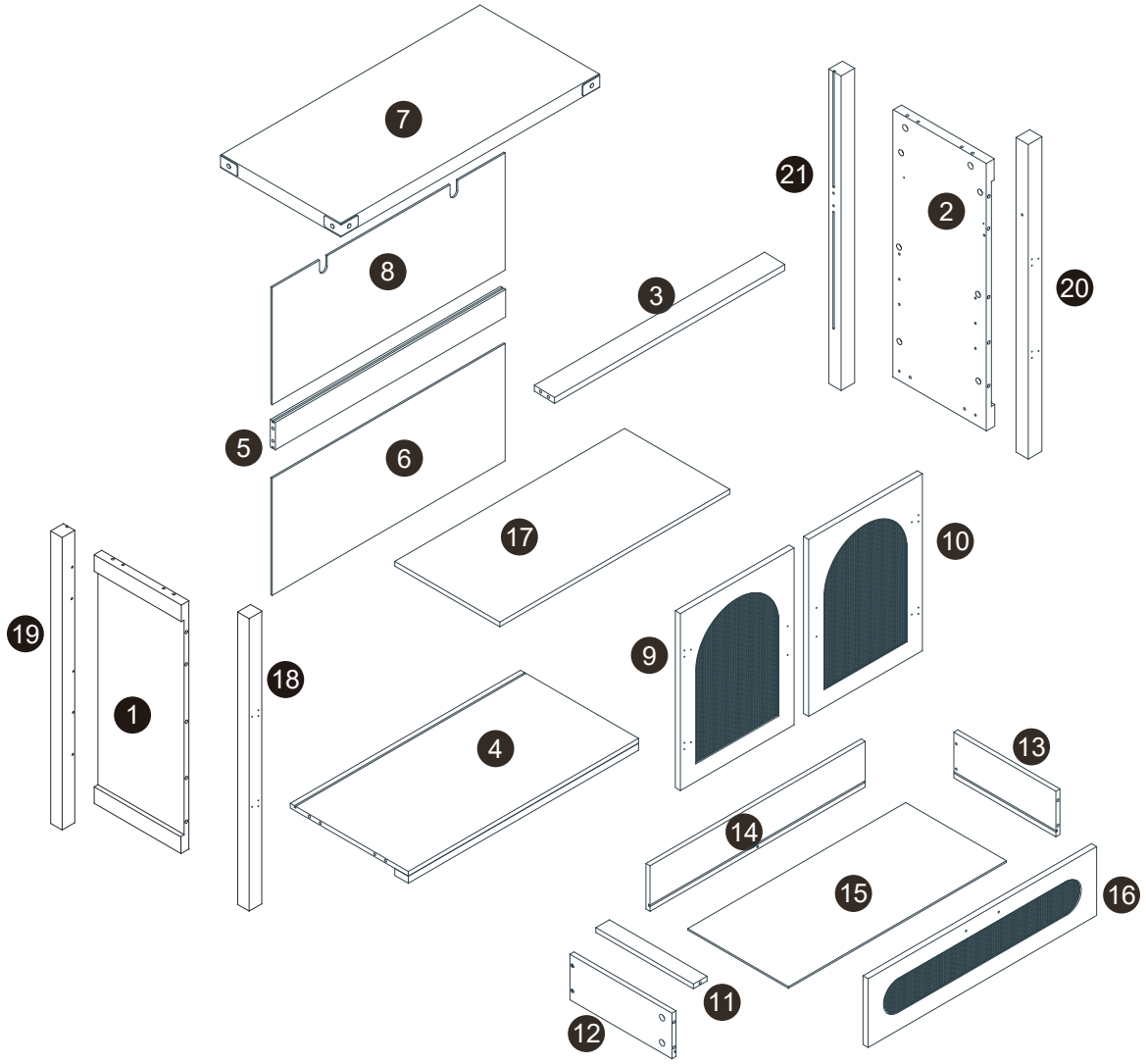

Screws &Tools

A	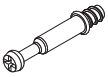	Ø6x35mm x33	I		x12	Q	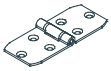	x4
B		Ø15x9.5mm x33	J		x2	R		Ø3.5x12mm x24
C		Ø6x30mm x16	K		x2	U		Ø30mm x4
D		Ø4x35mm x7	L		x1			
E		Ø4x18mm x6	M		x1	CL	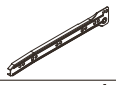	300mm x1
F		x3	N		Ø3x14mm x2	CR		300mm x1
G		Ø3x12mm x14	O		x2	DL		300mm x1
H		Ø4x14mm x4	P		x4	DR	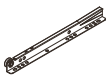	300mm x1

Componets

1	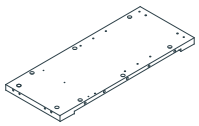	x1
2	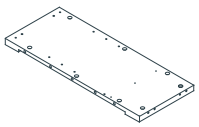	x1
3	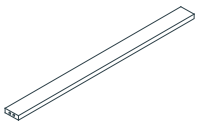	x1
4	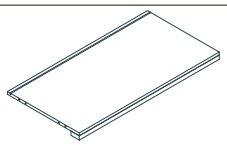	x1
5	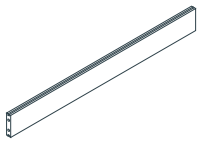	x1
6	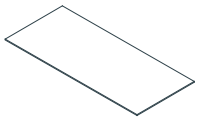	x1
7	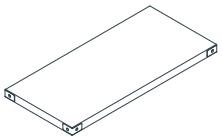	x1
8	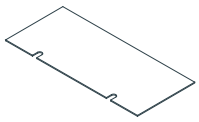	x1
9	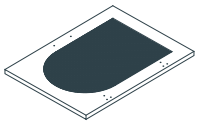	x1
10	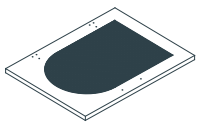	x1
11		x1

12	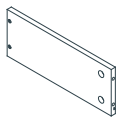	x1
13	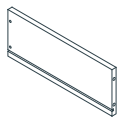	x1
14	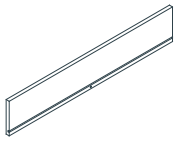	x1
15	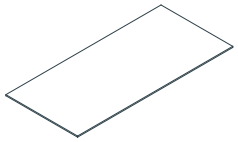	x1
16	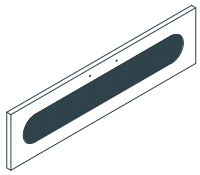	x1
17	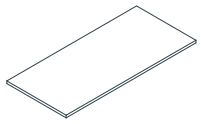	x1
18	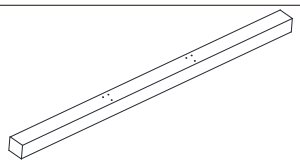	x1
19	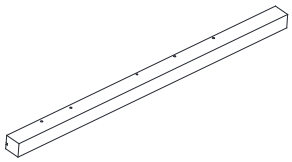	x1
20	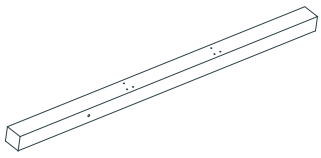	x1
21	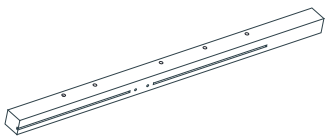	x1

Check all the components & screws before assembly.
Do not install in case part is missing, contact us to get.
Send email with your question to ***support@garvee.com***
We will resend within 24 hours.

Step 1

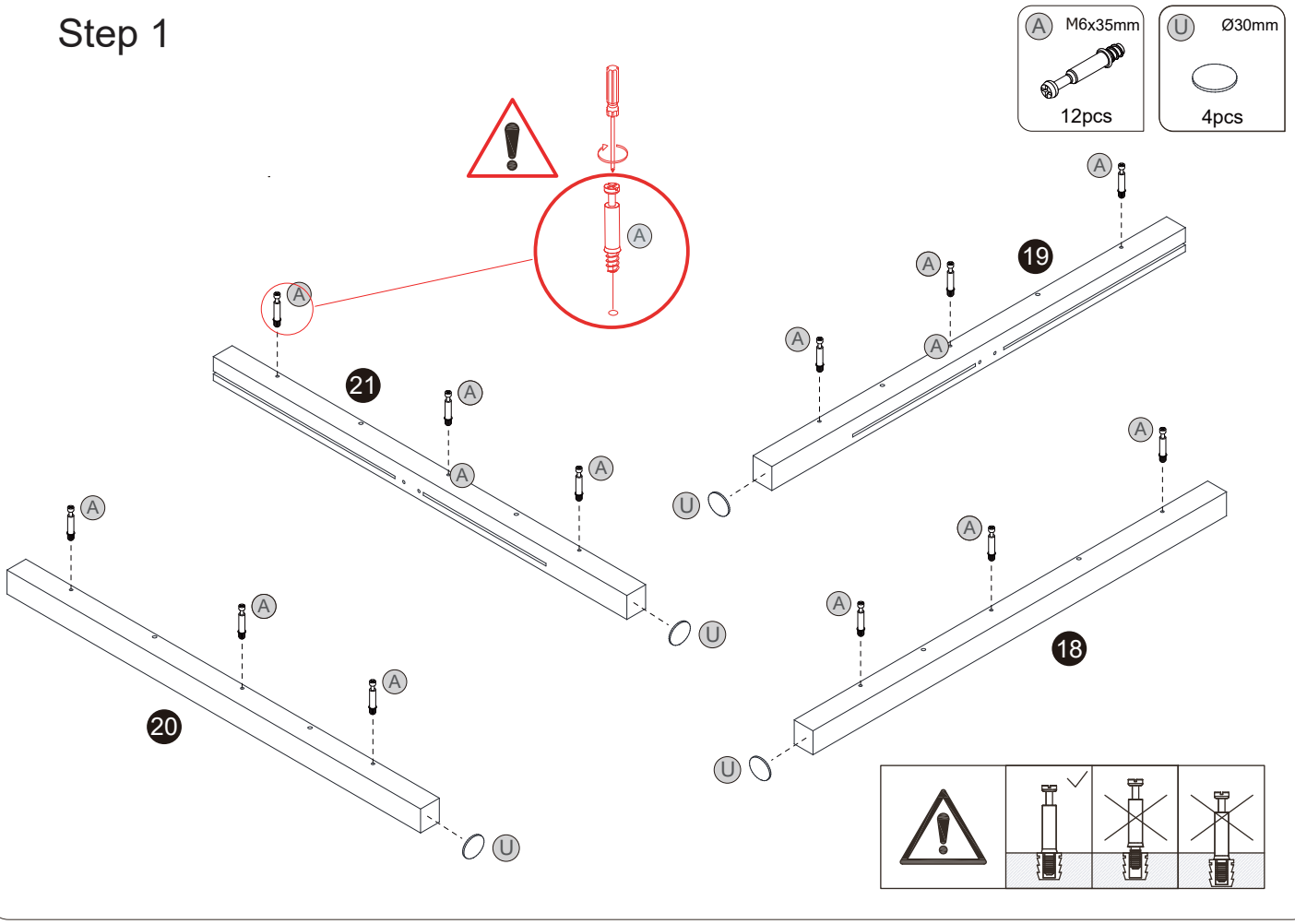
A M6x35mm
12pcs
U Ø30mm
4pcs
A
U
19
21
20
18

Step 2

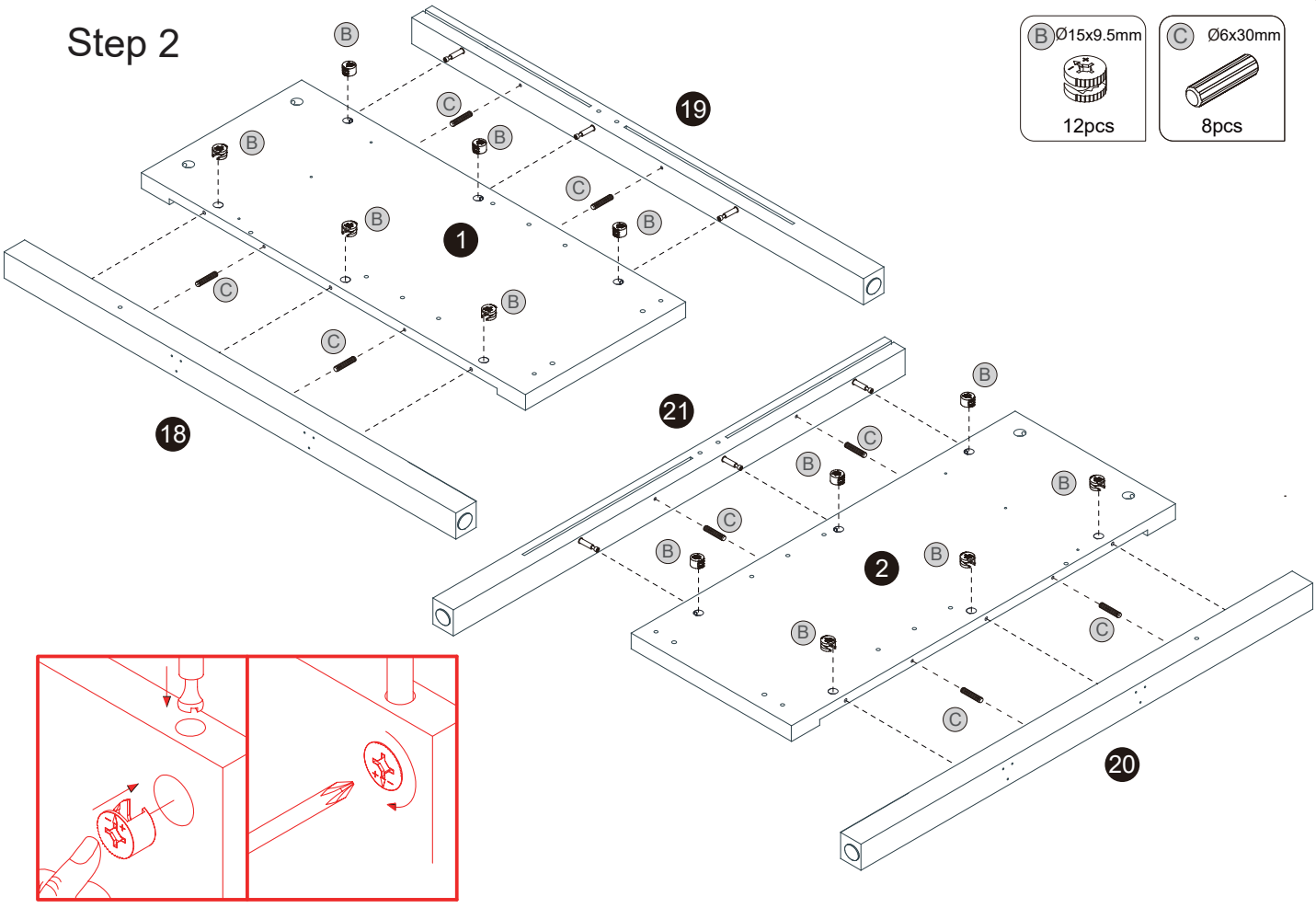
B Ø15x9.5mm
12pcs
C Ø6x30mm
8pcs
B
C
19
1
18
21
2
20

Step 3

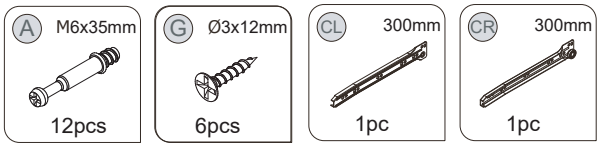
A M6x35mm
12pcs
G Ø3x12mm
6pcs
CL 300mm
1pc
CR 300mm
1pc

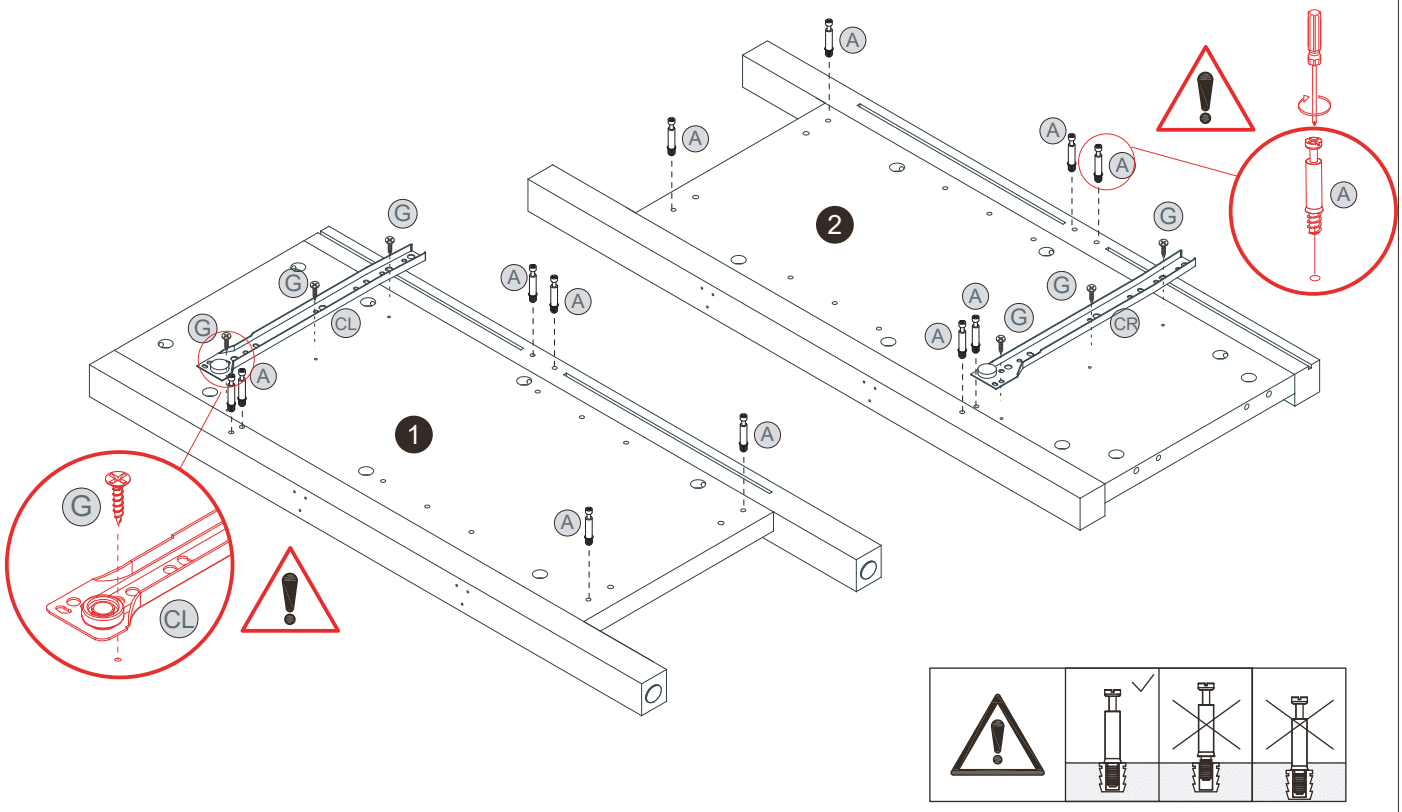
1
2
A
G
CL
CR

Step 4

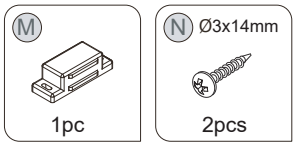
M
1pc
N Ø3x14mm
2pcs

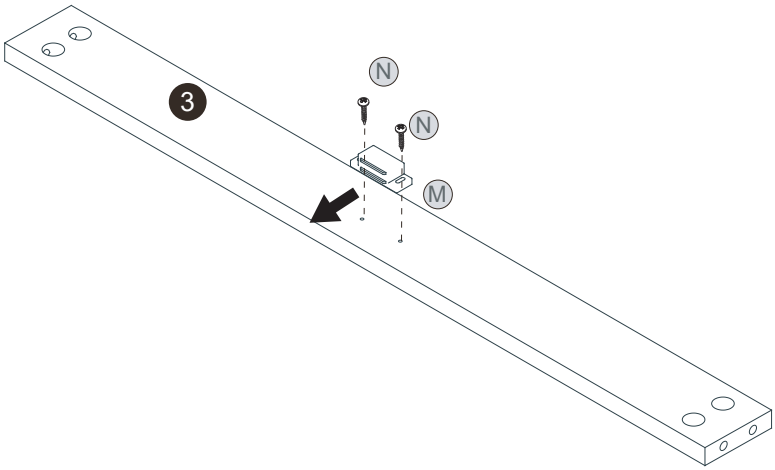
3
N
N
M

Step 5

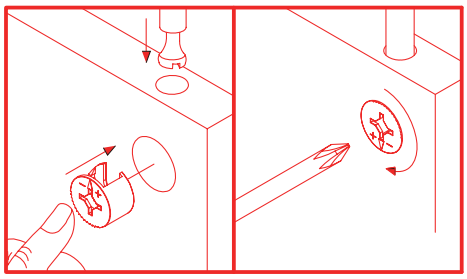

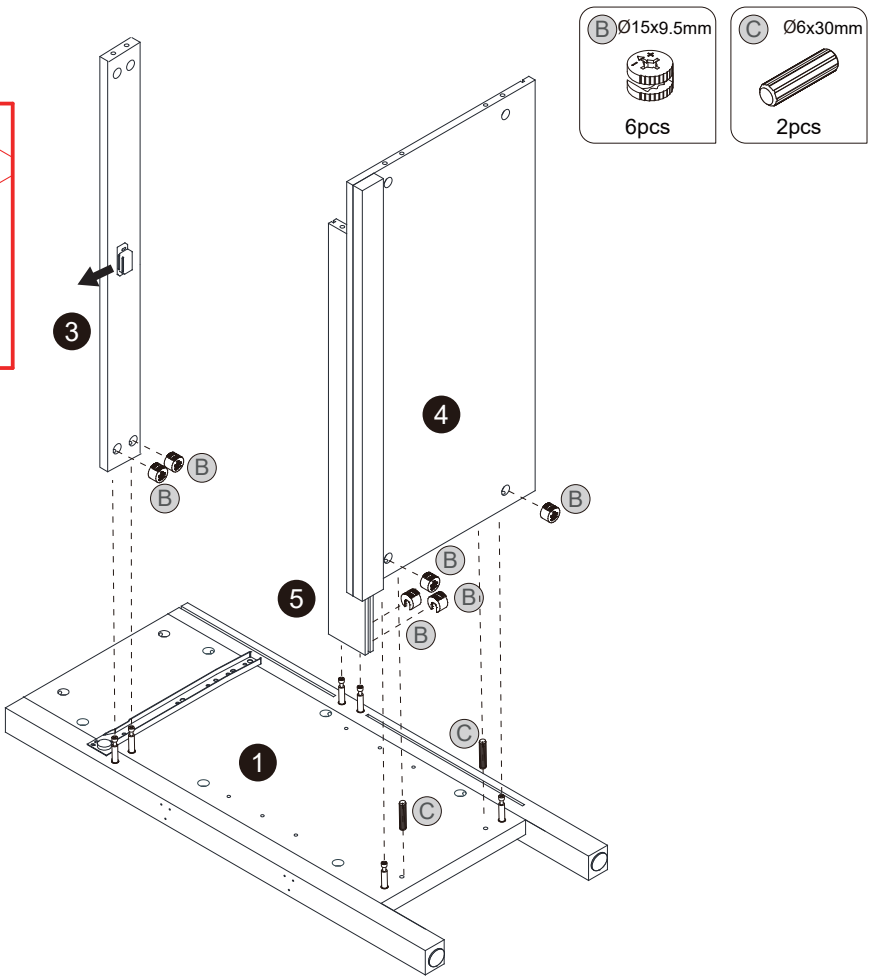
B Ø15x9.5mm
6pcs
C Ø6x30mm
2pcs
3
4
5
1
B
C

Step 6

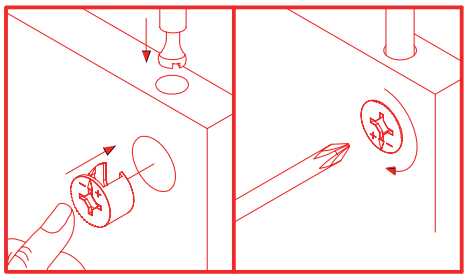

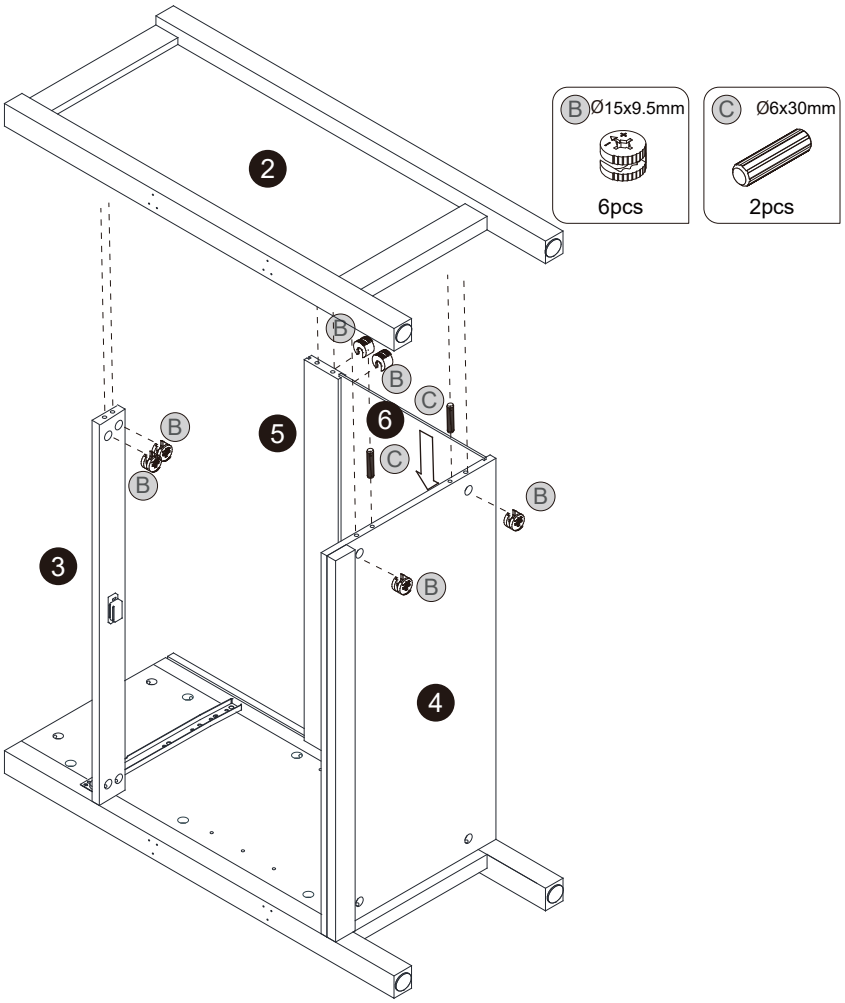
B Ø15x9.5mm
6pcs
C Ø6x30mm
2pcs
2
3
4
5
6
B
C

Step 7


A M6x35mm
4pcs
H Ø4x14mm
4pcs
J
2pcs

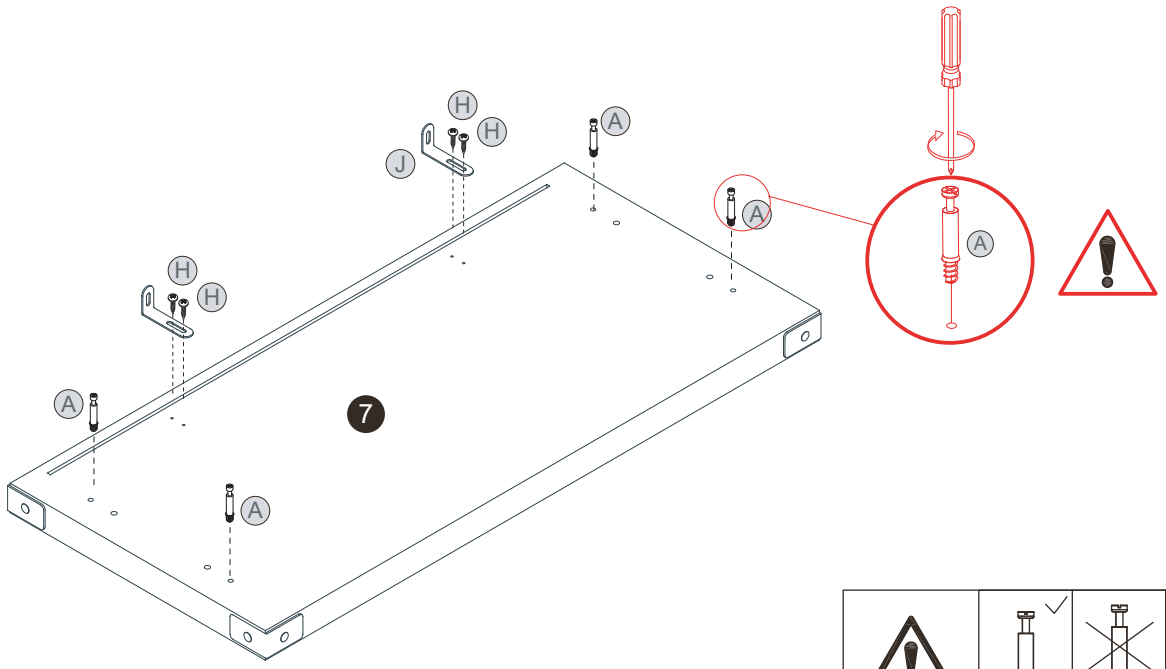
H
H
J
A
A
H
H
A
A
7

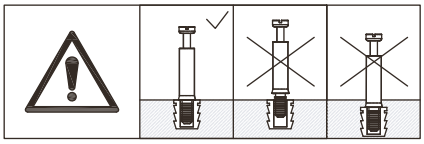

Step 8

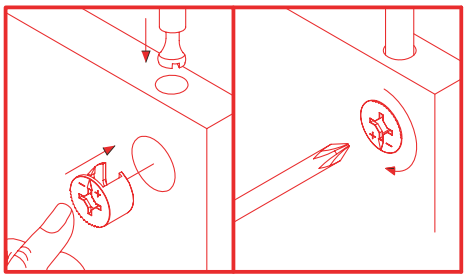

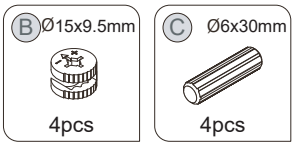
B Ø15x9.5mm
4pcs
C Ø6x30mm
4pcs

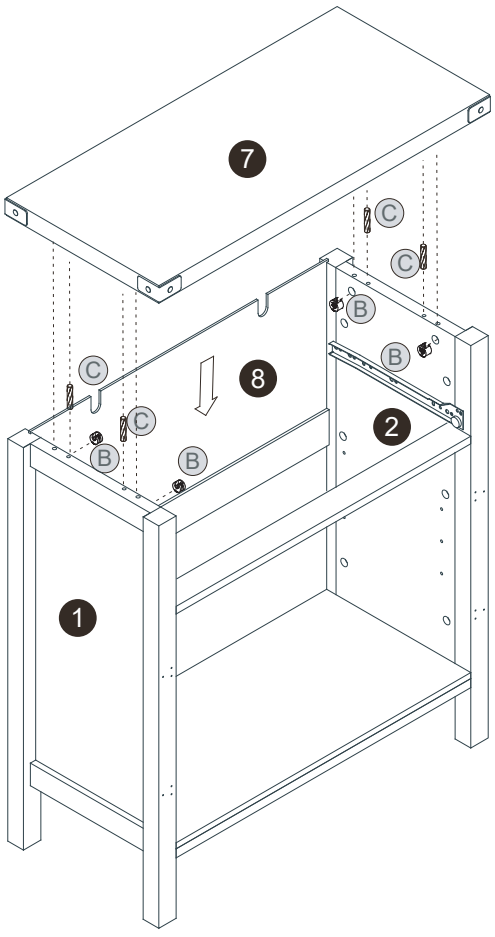
7
C
C
B
B
C
C
B
B
8
2
1

Step 9

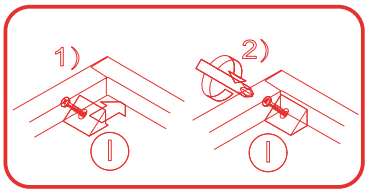

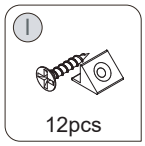

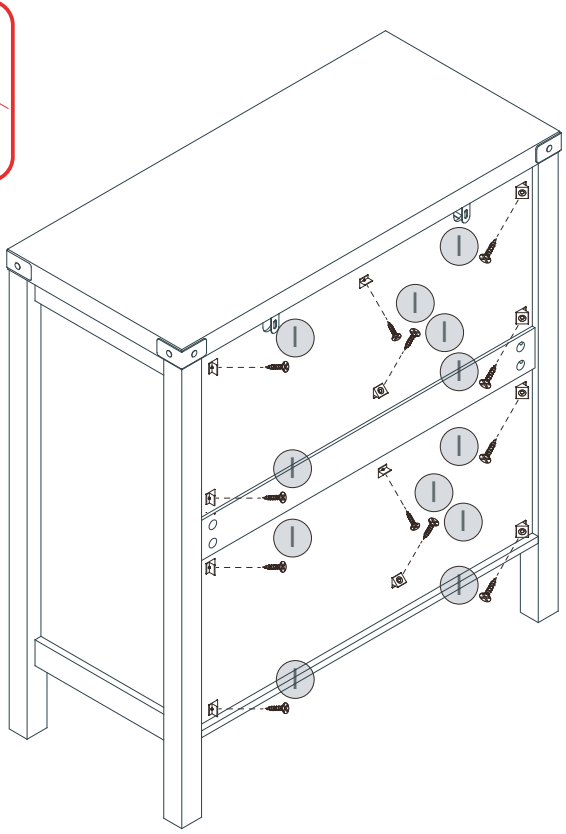

Step 10

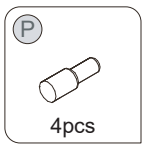

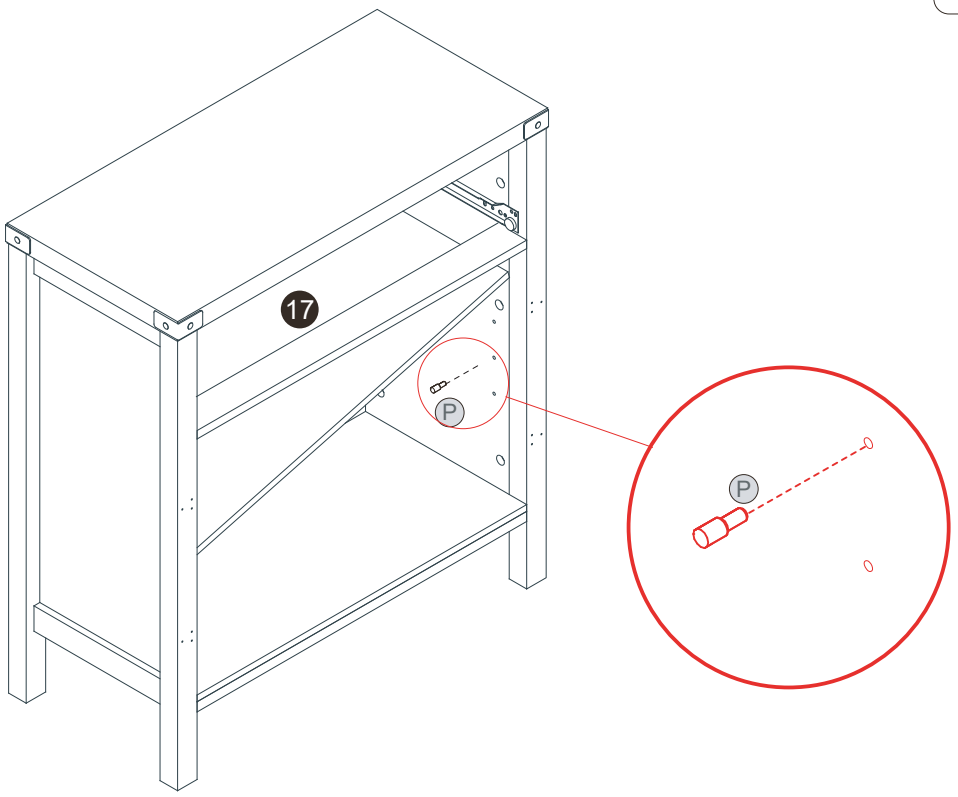

Step 11

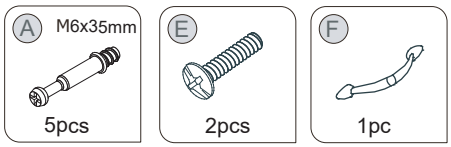

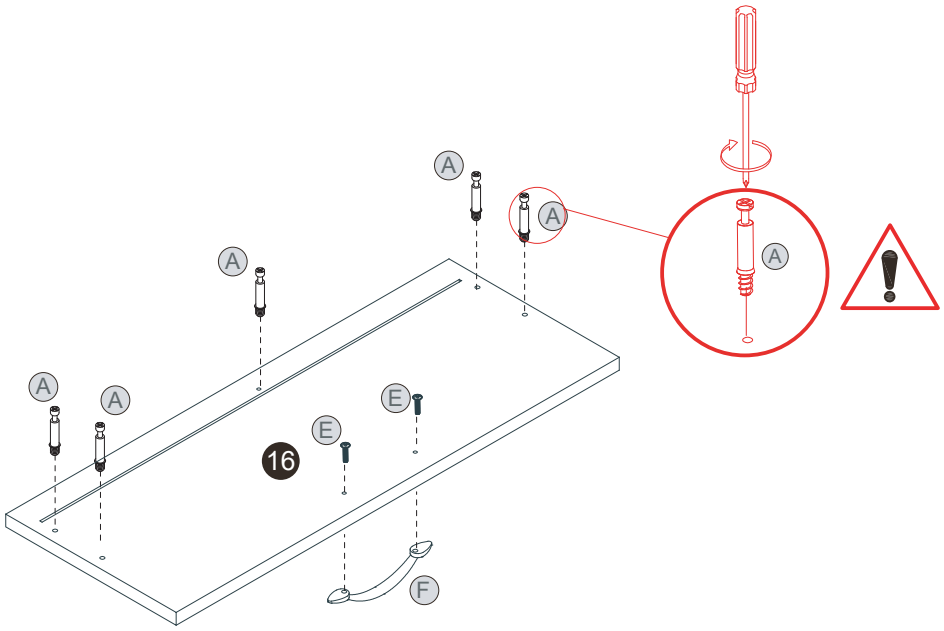

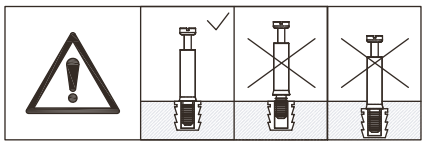

Step 12



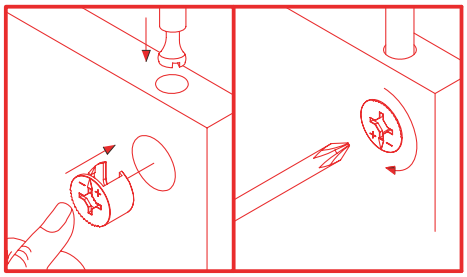

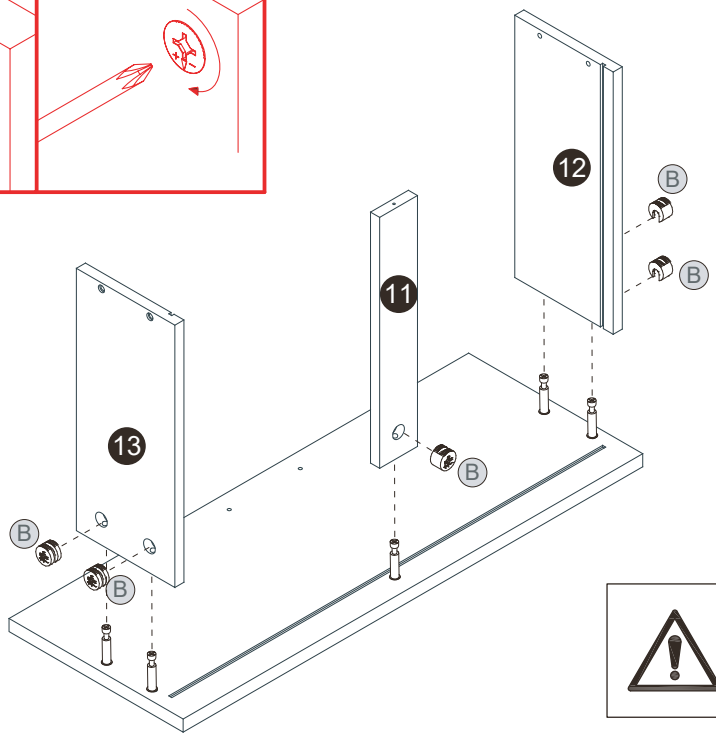

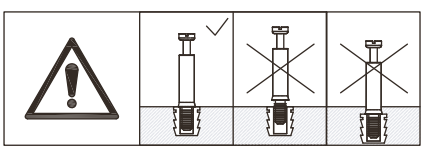

Step 13

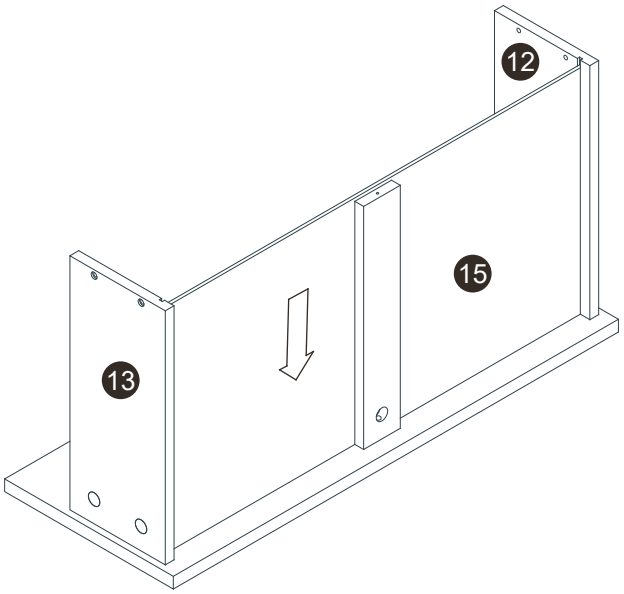

Step 14



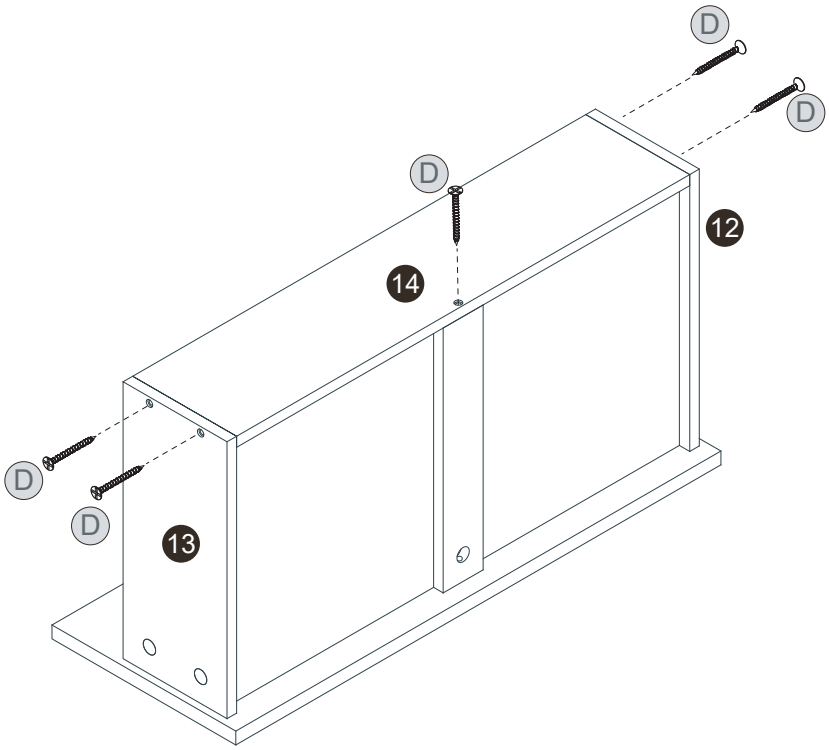

Step 15

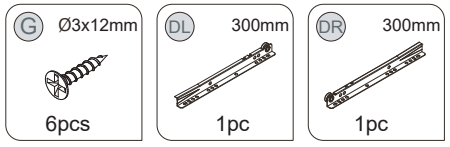

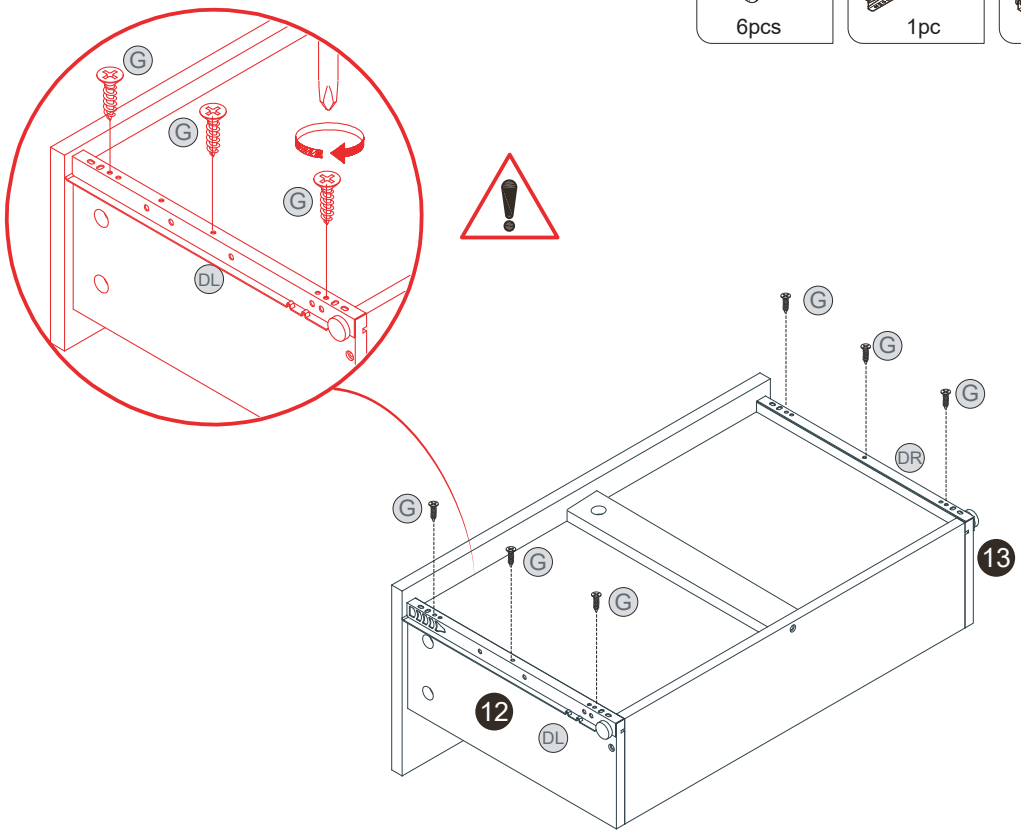

Step 16

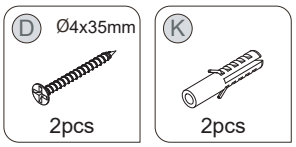

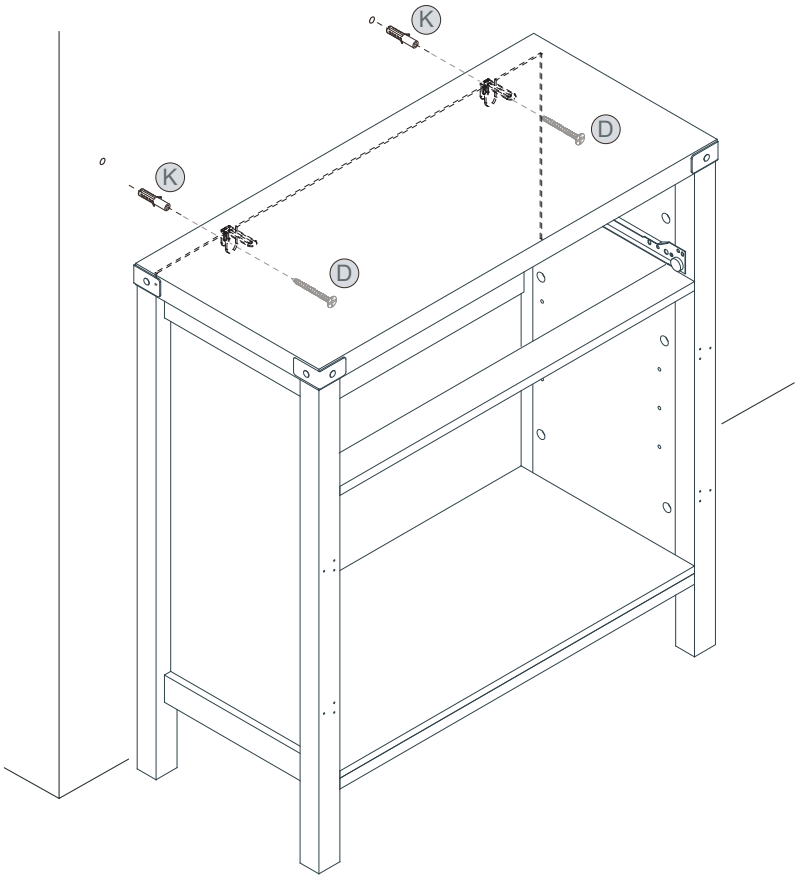

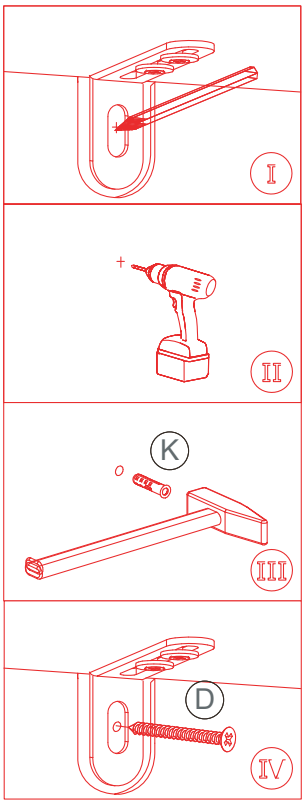

Step 17

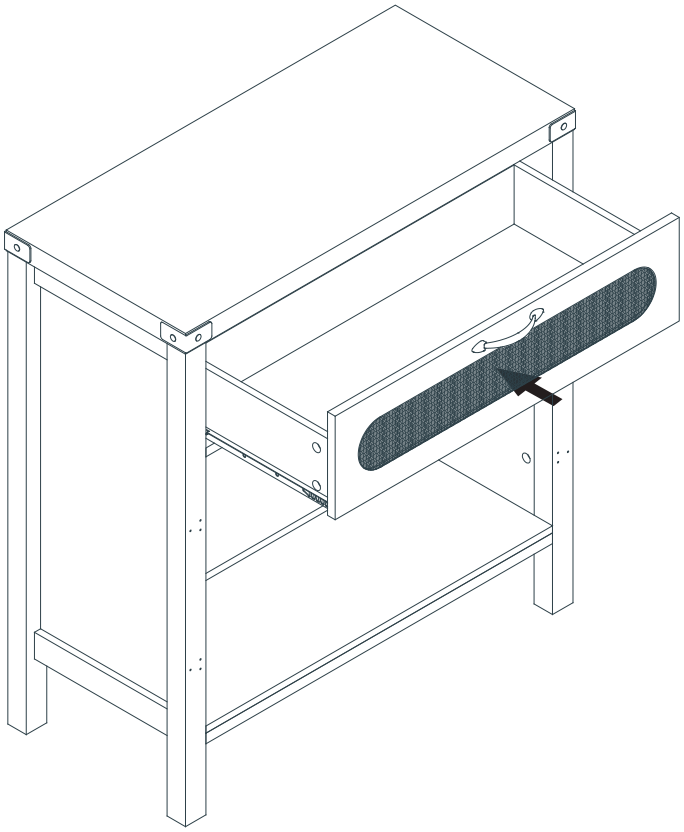

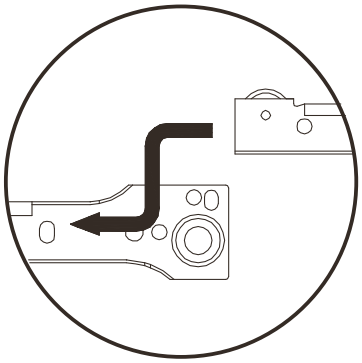

Step 18

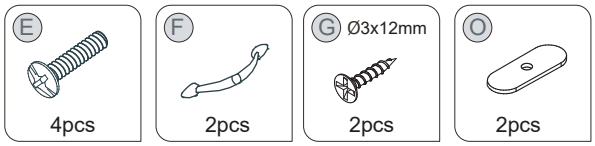

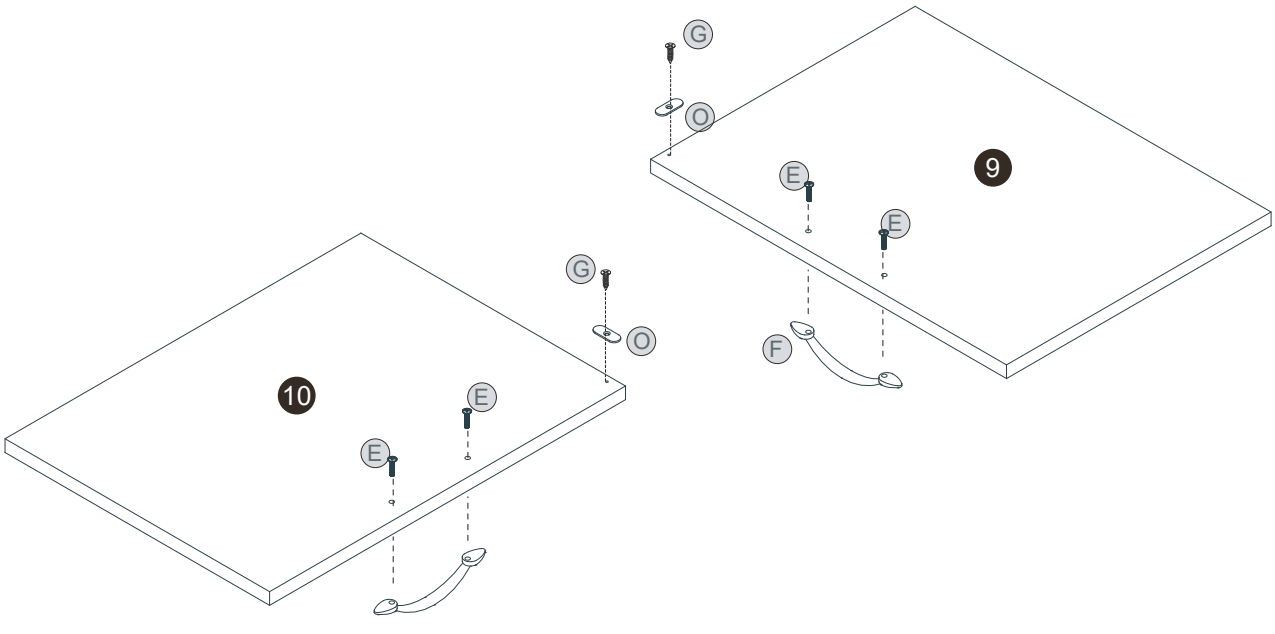

Step 19

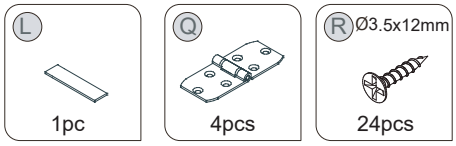

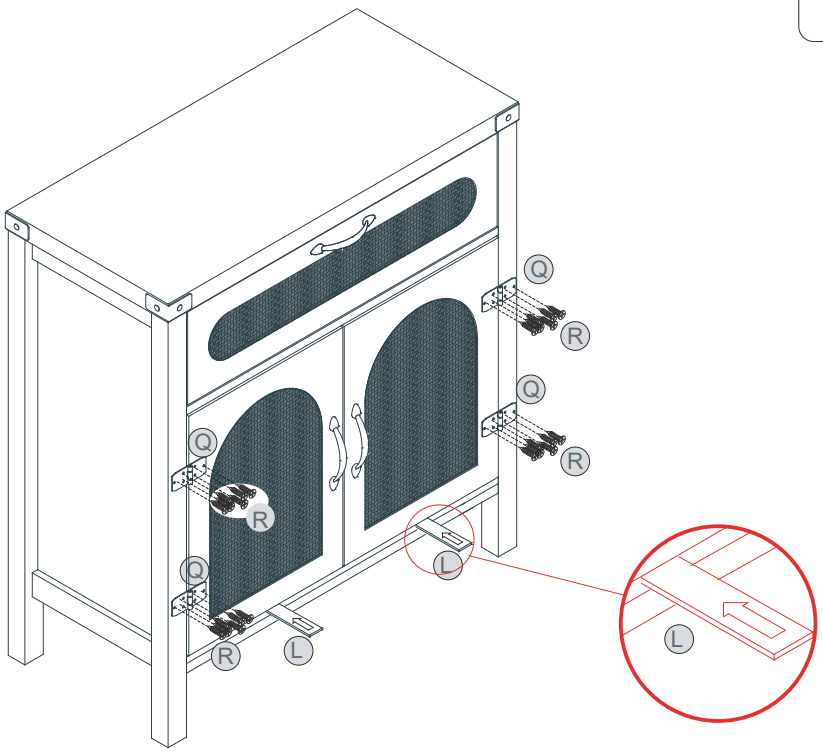

Step 20

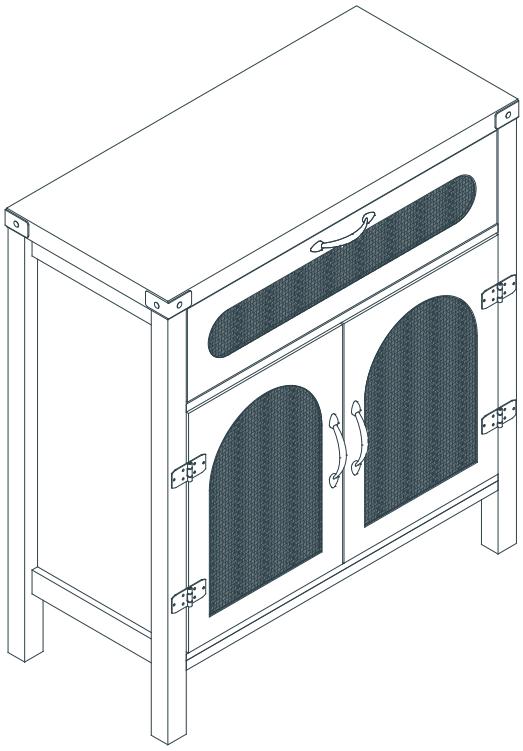

IMPORTANT SAFETY INFORMATION

Please carefully read the instructions and caution warnings below before assembling the product. Following this guide will ensure that you install, use and maintain the product properly.

- Please keep this installation and user manual/instructions for future reference in case you need to assemble the product.
- Do not assemble if you notice serious damage such as cracks or bends.
- During installation, please use work gloves for hand safety.
- Please assemble the unit on carpeted floor or the flat cardboard box to avoid scratching the surface or your floor while assembling on the floor.
- To assemble, please use the complimentary installation tools (Allen Wrench). Pay more attention to the direction of components at each steps.
- It is recommended that two people work together to assemble the product.
- Please do not tighten the screws up too much, just to 80% before you finish to make the installion go on successfully.

RETURN POLICY

We believe you will absolutely love your new product. But for some reason you want to return your item, please contact us within 30 days after receiving and ensure that the product which you want to return is in a good condition in the original box with all original certificates of purchase, manuals and accessories attached.

HOW TO MAINTAIN YOUR PRODUCT:

- Check the screws of the product are not loose from regular use.
- Do not use sharp instruments, rubbing alcohol, corrosive chemicals, or abrasive cleaners to clean the product.
- Do not keep the product in a damp environment for a long period of time. The damp environment may cause the iron components to rust and the plates to bulge and crack.

CAUTIONS!

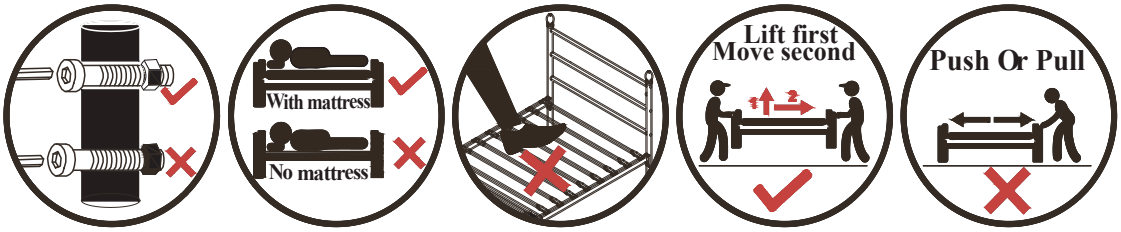

How to find us?

Customer Service

Email: support@garvee.com

Limited Liability & Warning

No Unauthorized Modifications/Repairs: Do not modify or attempt to repair this product unless you are an authorized technician. Unauthorized actions may create hazards and void all warranties

Misuse & Non-Compliance: We are not liable for any injury, damage, or loss resulting from:

(a) misuse, abuse, neglect, or improper installation;

(b) failure to follow instructions or safety precautions;

(c) use of unauthorized parts/accessories;

(d) unauthorized modifications/repairs;

(e) accidents, natural disasters, or external causes.

If you doubt any step of installation or operation, stop using the product and contact authorized service or the customer support.

LIMITACIÓN DE RESPONSABILIDAD Y ADVERTENCIA

Modificaciones o Reparaciones No Autorizadas: NO modifique ni intente reparar este producto a menos que sea un técnico autorizado. Las acciones no autorizadas pueden generar riesgos y anularán todas las garantías.

Uso Indebido e Incumplimiento: No asumimos responsabilidad alguna por lesiones, daños o pérdidas que resulten de:

(a) uso indebido, abuso, negligencia o instalación incorrecta;

(b) incumplimiento de las instrucciones o precauciones de seguridad;

(c) uso de piezas o accesorios no autorizados;

(d) modificaciones o reparaciones no autorizadas;

(e) accidentes, desastres naturales o causas externas.

Si tiene dudas sobre algún paso de la instalación o el funcionamiento, deje de usar el producto y póngase en contacto con el servicio técnico autorizado o con atención al cliente.

GARVEE

support@garvee.com