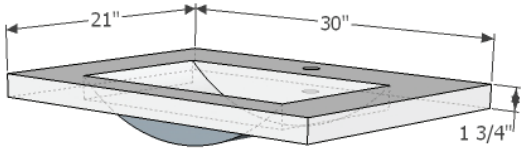

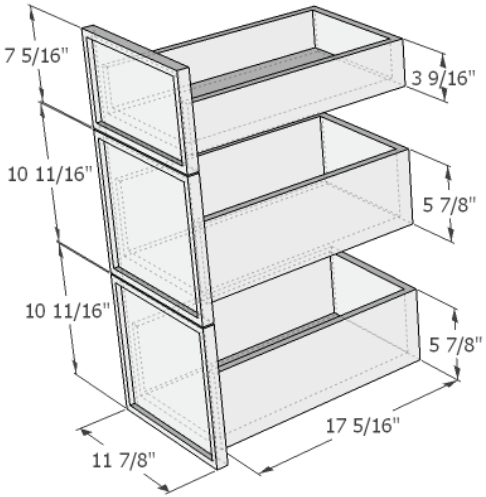

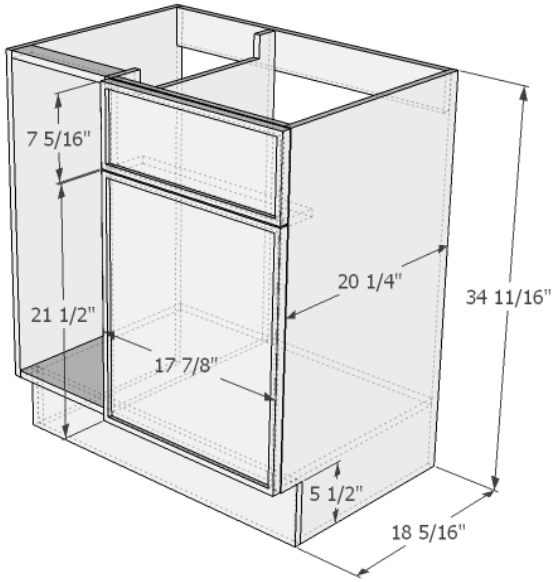

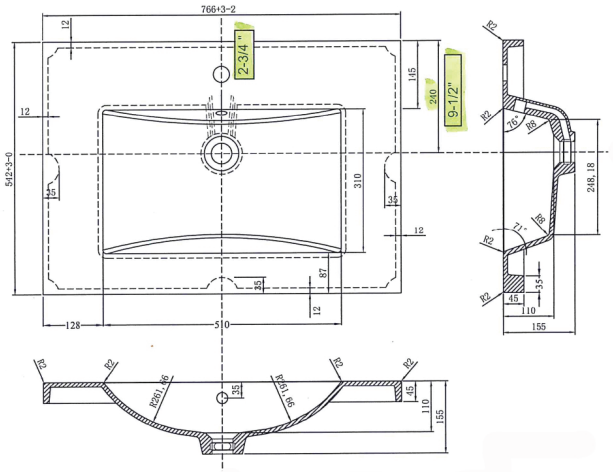

SINK DETAIL

Flow Rate: 8.42sec/gal

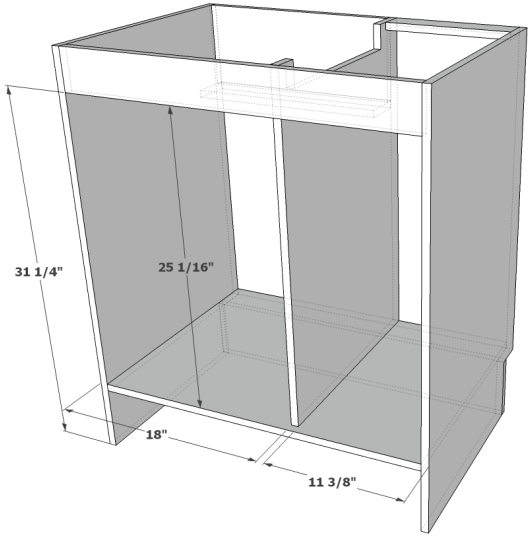

BACK DETAIL