ZLINE

RANGE HOODS

Installation Guide and User Manual

ATTAINABLE **LUXURY®**

SCAN ME

REGISTERING YOUR PRODUCT

Please register your ZLINE appliance to activate your warranty. Begin the simple registration process by scanning the QR code.

By registering your appliance, you will have access to:

- Technical Support
- Warranty Service
- Tracking your support inquiries

⚠ WARNING: This product can expose you to chemicals including nickel, which is known to the State of California to cause cancer. For more information, go to www.P65Warnings.ca.gov.

ZLINE Kitchen and Bath provides Attainable Luxury, where the kitchen and bath of your dreams is never out of reach. Through our unique designs and unparalleled quality, we're dedicated to providing you an elevated experience in the heart of your home. With an endless selection of features and finishes, our inspiration is your reality.

ZLINE is fueled by a passion for innovation; A relentless pursuit of bringing the highest end luxury designs and professional features into everyone's homes. Because we continually strive to improve our products, we may change specifications and designs without prior notice.

WARRANTY

PROPER VENTING REGULATIONS

Please verify with your local, city, and state regulations on the proper venting method for your hood. Many agencies have CFM rating specifications for your hood, as well. You may have to purchase additional items on your own to vent the hood in accordance with your local city and state specifications.

THREE YEAR PARTS WARRANTY

For three years from the date of original purchase, we will provide free of charge, non-consumable replacement parts for the components that failed due to manufacturing defects. Subject to the conditions and limitations set forth below at its option, either repair or replace any part of its products that prove defective by reason of improper workmanship or material. Repaired parts or replacement products will be provided by ZLINE on an exchange basis and will be either new or refurbished to be functionally equivalent to new. The consumer is responsible for shipping costs. Consumable parts not covered by this warranty include, but are not limited to: metal, aluminum, and charcoal filters.

WHO IS COVERED

This warranty is extended to the original purchaser for products purchased for ordinary home use in the continental USA.

WARRANTY

THIS WARRANTY WILL BE VOID WHEN

- Product damaged through negligence, improper installation, accident, abuse, misuse, and natural disaster, insufficient or excessive electrical supply.
- Abnormal mechanical or environmental conditions or any unauthorized disassembly repair, modifications, or failure to follow the installation instructions or when product is used commercially or other than its intended purpose or damaged because of improper connection with equipment of other manufacturers.
- Repaired or modified by anyone other than authorized agents.
- This limited warranty does not apply to any product on which the original identification information has been altered, obliterated or removed, has not been handled or packaged correctly, has been sold as second-hand or resold contrary to the US regulations.

WHAT IS NOT COVERED

Consumable parts such as light bulbs, metal and charcoal filters. The natural wear of finish, and wear due to improper maintenance, use of corrosive and abrasive cleaning products, pads and cleaning products. Chips, dents or cracks due to abuse, misuse, freight damage (not reported), or improper installation. Damage of product caused by accident, fire, flood, or act of God, we are not liable for and is not covered by warranty, any loss of properties or any cost associated with removing, servicing, installing or determining the source of problems with our products.

This warranty is valid in the United States. It is non-transferable and applies only to the purchaser and does not extend to subsequent owners of this product, any applicable implied warranties, including the warranty of merchantability are limited in duration to a period of express warranty as provided herein beginning with the date of original purchase at retail and no warranties, whether express or implied shall be applied to this product. All shipping charges for returns are the responsibility of the purchaser.

DISCLAIMER

Carefully inspect all items for damages before accepting delivery. Customer should note any damages on the freight bill or express receipt. Request the name and signature of the carrier's agent and keep a copy to support your claim. Upon acceptance of items, owner assumes responsibility for its safe arrival. Report damages to the carrier and file a claim immediately. Failure to do so may result in the denial of your claim. The carrier will furnish you with necessary forms for filing a claim.

Please inspect contents of package(s) carefully upon receiving them! We must be notified of any damages and/or missing parts within (5) days upon your receipt of package(s). Claims will not be accepted after (5) days.

NOTE: Items were thoroughly tested and carefully packed in our facility before shipping. Products must be returned in good working condition with ALL original parts and documentation packed in all original cartons, fillers and shipping cartons. A restocking fee of 15% will be charged for all approved returns. Exchanges or returns may not be accepted if any packaging is missing. Make certain to inspect the hood for damages and defects before installation. Appearance flaws of the hood found after installation and not affecting the hood's performance is not covered under our warranty for returns or exchanges. Service visits not covered under warranty will carry a service charge.

Before installing your unit, please test the item(s) for proper functionality by plugging it into the wall and testing the fan and lights. If unit does not work, please contact customer service right away. Have a question? Call us at 1-614-777-5004.

Before Installation: Return for exchange or refund.
After Installation: No exchange or refund.

TABLE OF CONTENTS

IMPORTANT SAFETY INSTRUCTIONS	1
WALL RANGE HOOD INSTALLATION	4
WALL CROWN MOLDING INSTALLATION	9
DESIGNER WALL RANGE HOOD INSTALLATION	10
WALL CROWNSOUND® INSTALLATION	15
ISLAND RANGE HOOD INSTALLATION	17
DESIGNER ISLAND RANGE HOOD INSTALLATION	21
ISLAND CROWNSOUND® INSTALLATION	25
UNDER CABINET INSTALLATION	27
RANGE HOOD INSERT INSTALLATION	31
REMOTE BLOWER INSTALLATION	33
BUTTON/CONTROL PANEL OPERATION	35
HOW TO CHANGE PARTS	36
TROUBLESHOOTING AND FAQ	47

SAFETY INSTRUCTIONS

WARNING

This is the safety alert symbol. This symbol alerts you to potential hazards that can hurt you and others. All safety messages will follow the safety alert symbol.

READ ALL INSTRUCTIONS BEFORE INSTALLING AND OPERATING THIS APPLIANCE.

- The installation instructions in this manual are intended for qualified installers, service technicians, or persons with similar qualified background. Installation and electrical wiring must be done by qualified professionals and in accordance with all applicable codes and standards, including first-rated construction. DO NOT attempt to install this appliance yourself. Injury could result from installing the unit due to lack of appropriate electrical and technical background. Due to the size and weight of this range hood, two people installation is recommended.
- Range hood may have very sharp edges; please wear protective gloves if it is necessary to remove any parts for installing, cleaning or servicing.
- Activating any switch ON before completing installation may cause ignition or an explosion.

TO REDUCE THE RISK OF FIRE, ELECTRIC SHOCK, OR INJURY TO PERSONS:

- For general ventilating use only. DO NOT use to exhaust hazardous or explosive materials and vapors. The combustion air flow needed for safe operation of fuel-burning equipment may be affected by this unit's operation. Follow the heating equipment manufacturer's guideline and safety standards such as those published by the National Fire Protection Association (NFPA), and the American Society of Heating, Refrigeration and Air Conditioning Engineers (ASHRAE), and the local code authorities. Sufficient air is needed for proper combustion and exhausting of gases through the duct to prevent back drafting.
- Before servicing or cleaning unit, switch power OFF at service panel and lock service panel to prevent power from being switched ON accidentally.
- Metal ductwork may be required based on local codes. Complimentary ductwork in either heat-resistant PVC or flexible metal may be included as a courtesy and can be omitted in favor of required ductwork.

SAFETY INSTRUCTIONS

- Ducted fans MUST ALWAYS be vented to the outdoors. At the point where the duct work ends, add an external damper to prevent air from entering the home when the hood is not in use. This also prevents small animals and rain water from entering the duct work.
- When cutting or drilling into a wall or ceiling, be careful not to damage electrical wiring or other hidden utilities.
- Your safety and the safety of others is very important. We have provided many important safety messages in this manual and on your appliance. Always read and obey all safety messages. All safety messages will tell you what the potential hazard is, tell you how to reduce the chance of injury, and tell you what can happen if the instructions are not followed.
- All electrical wiring must be properly installed, insulated, and grounded.
- Old duct work should be cleaned or replaced, if necessary, to avoid the possibility of a grease fire. Check all joints on duct work to insure proper connection, all joints should be properly taped.
- Use this unit only in the manner intended by the manufacturer. If you have any questions, contact the vendor.
- When the range hood ventilates the air out of the room, the air vented must be replaced, this is called make-up air. If a makeup air system is needed, but not used, a hood may not function as expected due to negative air pressure. We do not currently provide a make-up air unit. Always consult any applicable building codes in your area in regards to minimum and maximum air flow rates. Certain states may require additional items such as make-up air for larger CFM range hoods (typically over 300 CFM).
- Keep all fans, baffle, spaces, filter, grease tunnel, oil container and grease-laden surfaces clean. Grease should not be allowed to accumulate on fan, baffle, spaces, filter, grease tunnel or oil container. Clean grease-laden surfaces frequently.
- To reduce the risk of fire and to disperse air properly, make sure to vent air outside. DO NOT vent exhaust into spaces between walls, crawl spaces, ceilings, attics or garages.

SAFETY INSTRUCTIONS

- All ZLINE range hoods are ETL listed, ensuring all parts were tested for safety and meet industry standards and regulations. **NOTE:** This ensures all included plastic ducting pieces were tested for safety and are flame retardant.
- Always turn the range hood ON when cooking at high heat or when cooking flaming foods. Use high settings on the cooking range only when necessary. Never leave surface units unattended at high settings. Boil overs cause smoking and greasy spillovers that may ignite. Heat oils slowly on low or medium settings.
- Clean ventilating fan frequently.
- Always use appropriate cookware and utensils size. Always use cookware appropriate for the size of the surface element.

TO REDUCE THE RISK OF INJURY TO PERSONS IN THE EVENT OF A STOVE TOP GREASE FIRE:

- Smother flames with a close fitting lid, cookie sheet or metal tray, then turn OFF the burner. Never pick up a flaming pan—you may be burned.
- Keep flammable or combustible material away from flames. If the flames do not go out immediately, evacuate and call the fire department. DO NOT use water, including wet dishcloths or towels—a violent steam explosion will result.

WALL HOOD INSTALLATION

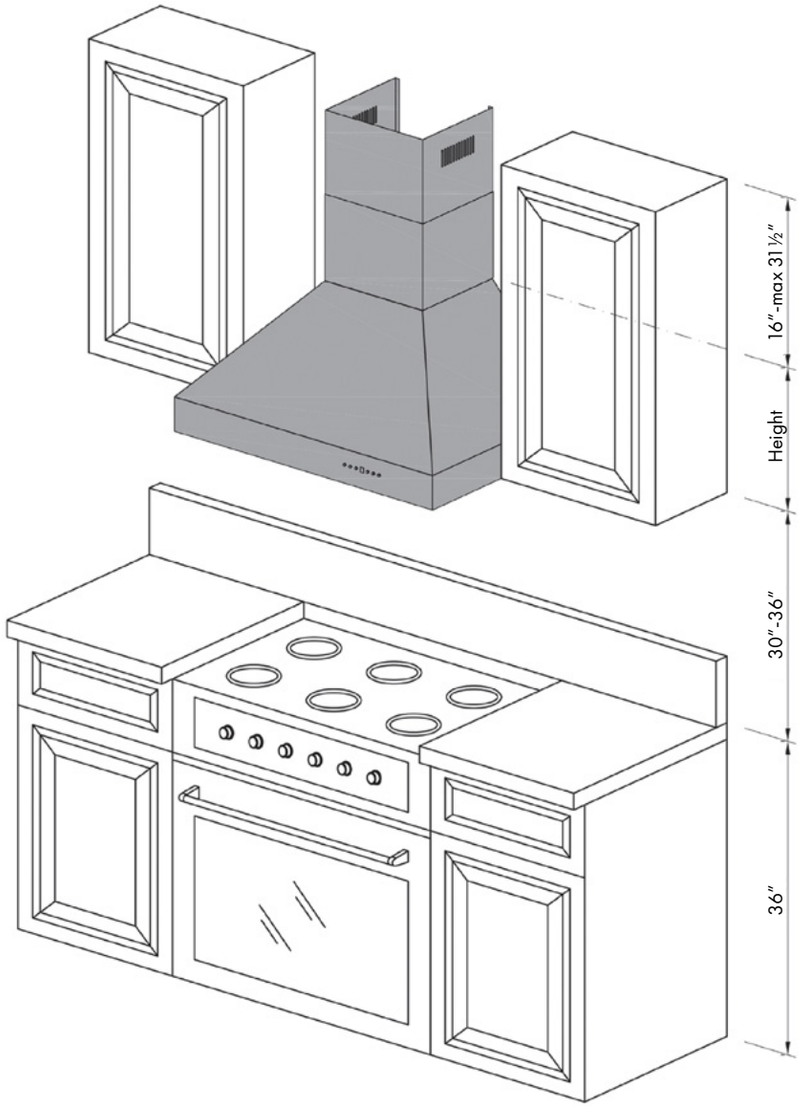

Scan me

Installation Tutorial Video

WALL HOOD INSTALLATION

Please unpack your range hood when it is delivered and inspect to ensure all parts are included.

1. Main Hood with All Lights and Button Banks Pre-Installed
2. Adjustable Stainless Steel Chimney Cover
3. Transition Piece (for 6″ or 8″)
4. Baffle Filters
5. Flexible Duct (for 6″ or 8″)
6. Packet of Screws and Anchors
7. Top Mounting Bracket
8. Grease Cup

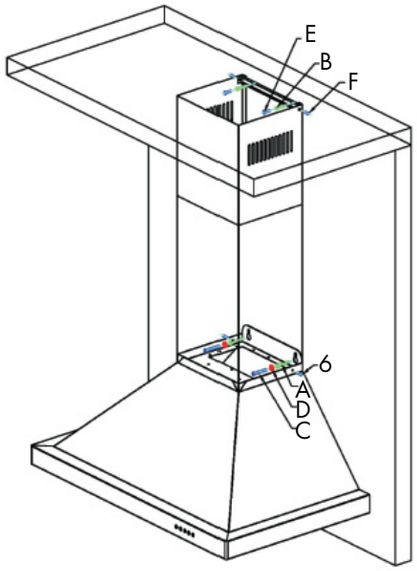

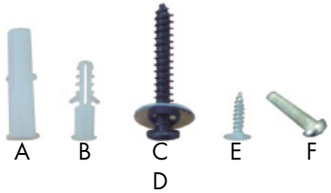

NOTE: Wall range hoods with single motors will come with a square to 6″ round transition piece and will include a back draft damper. The ducting with these range hoods is 6″. Dual motor wall hoods will come with a square to 8″ round transition piece without a back draft damper. The ducting with these range hoods is 8″ in diameter.

Use rigid ducting wherever possible. Try and minimize the use of elbows. It is recommended to establish 15-20″ of vertical airflow from the top of the hood before executing a 90° turn or elbow. More elbows and longer runs create higher static pressure. No more than two to three elbows are recommended. Use 40 feet of ductwork max. The hood comes with a grounded three prong plug that can be plugged into a 15 amp circuit.

WALL HOOD INSTALLATION

The recommended height to install your hood is 30˝ minimum and 36˝ maximum above the cooktop. For Outdoor (304 Series) hood installation, the unit must be installed at a minimum of 36˝ and a maximum of 42″ above the grill.

1. Find the center of the wall where you are installing the hood. Make sure there is sufficient bracing to hold the weight of the hood. Mark your center line and measure out from the center to find your two mounting points. Make sure your mounting points are level when you mark them. It is recommended to install the hood directly into wood supports. *Figure 1*
2. Mark the mounting points and install the two mounting screws provided leaving the heads out ¼˝ to mount the hood. *Figure 1*
3. Mount the main body of the hood to the two screws and screw into place. *Figure 2*
4. Mount the top chimney mounting bracket centering it above the hood. *Figure 3*

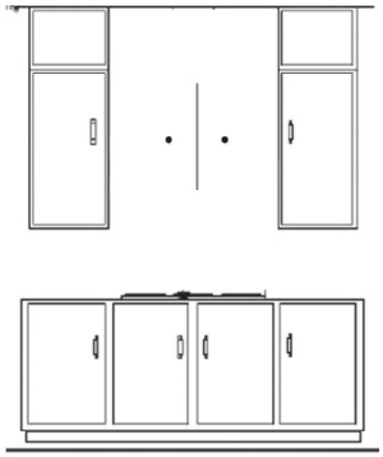

Figure 1

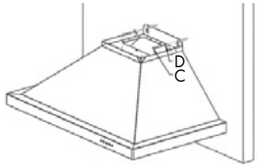

Figure 2

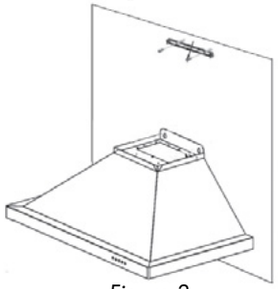

Figure 3

WALL HOOD INSTALLATION

5. Install the transition piece securing it with the screws provided. *Figure 4*
6. Make your electrical and ducting connections. Try and minimize the use of elbows. More elbows and longer runs create higher static pressure. The hood comes with a grounded three prong plug that can be plugged into a 15 amp circuit. The cord is 36″ long. *Figure 5*
7. Connect the ducting to the transition piece using foil-backed tape to hold it into place. Attach the ducting to the range hood. Before installing baffle filters, make sure that you insert the clear, plastic grease cup under the motor blower.

NOTE: ZLINE provides a ducting ring for the 8″ metal ductwork. The ring for the PVC 6″ can be found at the local hardware store.

NOTE: Place the cord behind the chimney or in the attic. An outlet behind the chimney, to either the left or right is ideal. *Shown left.*

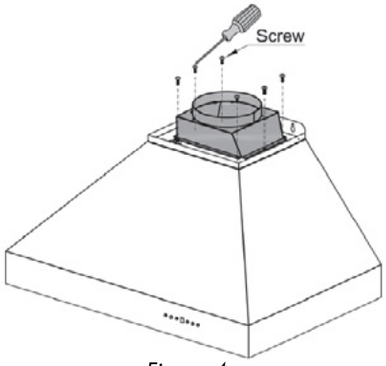

Figure 4

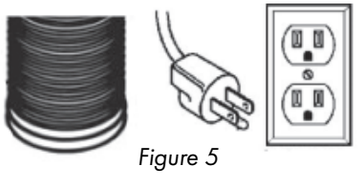

Figure 5

WALL HOOD INSTALLATION

8. Install the two part chimneys on top of the hood. Slide the inside section up until the vertical vent slots are visible, attach top portion to mounting bracket with screws. Secure lower chimney portion to the hood with screws provided. *Figure 6*
9. Install the grease cup by sliding into brackets located at the bottom of the motor. Install baffle channel and baffle filters. Not all models include baffle channels. *Figure 7*

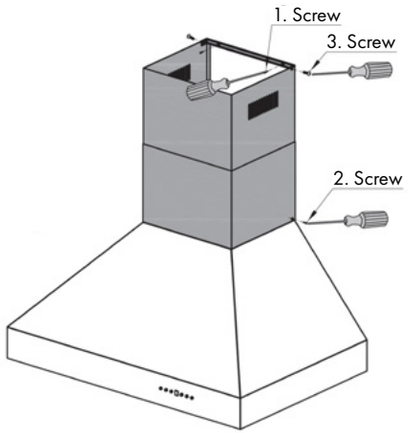

Figure 6

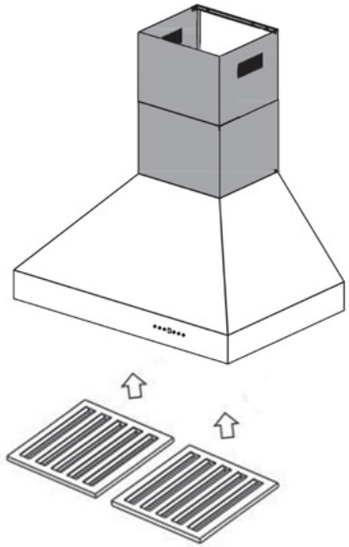

Figure 7

WALL CROWN MOLDING INSTALLATION

If using a crown molding, follow instructions before attaching ducting and chimney sections.

1. Attach crown molding bracket to ceiling using hardware provided.
2. Attach ducting and electrical connections.
3. Attach chimney sections to the range hood, then connect to crown molding bracket.
4. Slide crown molding onto crown bracket and secure into place.

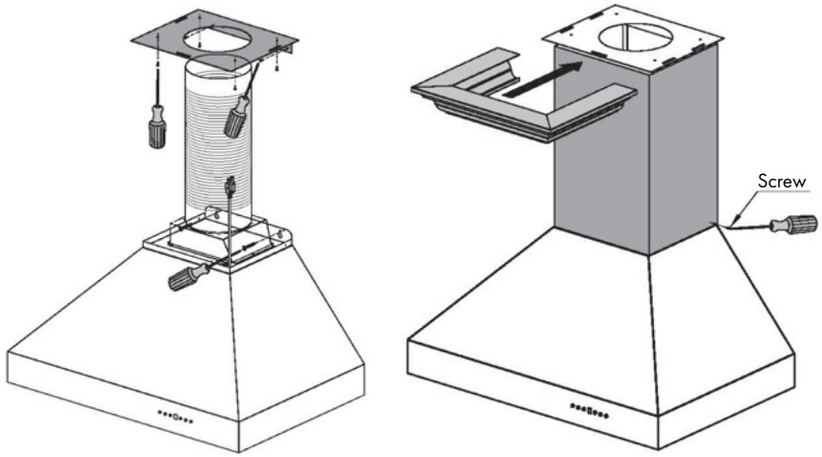

Scan Me

Installation Tutorial Video

DESIGNER WALL HOOD INSTALLATION

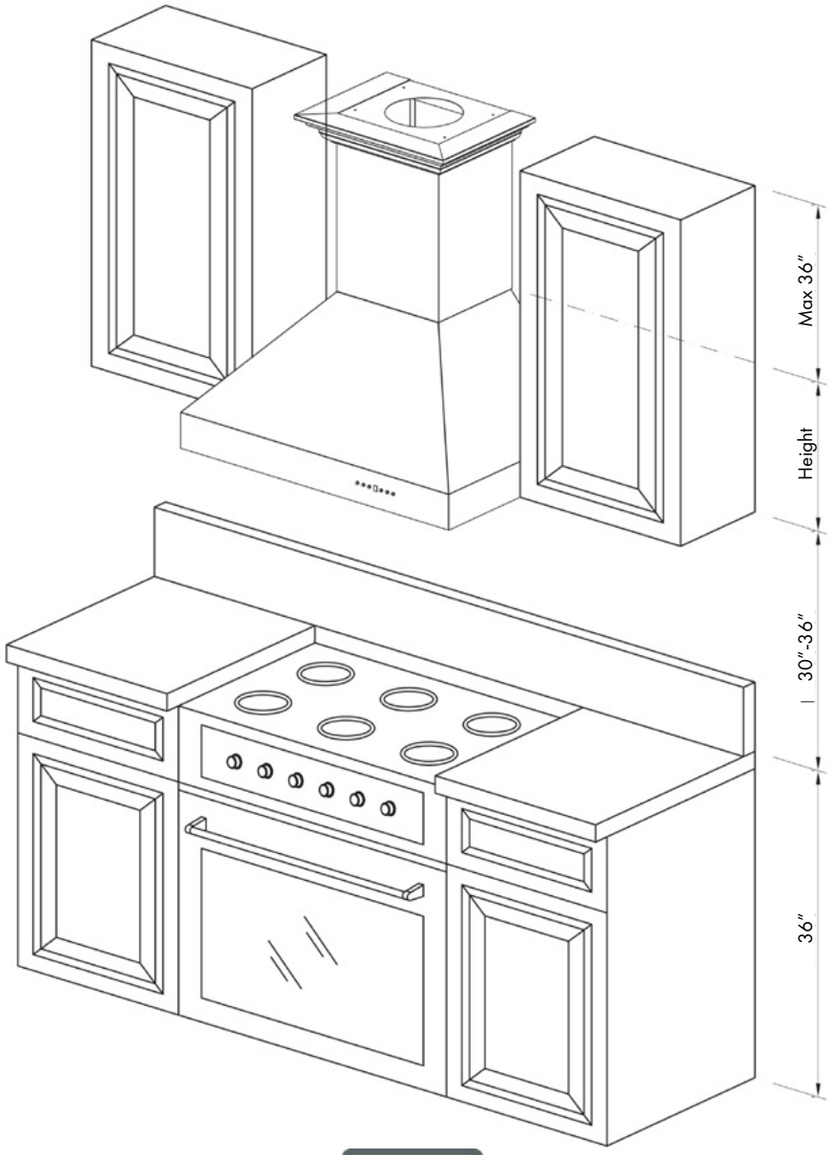

Scan Me

Installation Tutorial Video

DESIGNER WALL HOOD INSTALLATION

Please unpack your range hood when it is delivered and inspect to ensure all parts are included.

PARTS SUPPLIED

1. Main Hood with All Lights and Button Banks Pre-Installed
2. Chimney
3. Transition Piece (for 6″ or 8″)
4. Baffle Filters
5. Flexible Duct (for 6″ or 8″)
6. Packet of Screws and Anchors
7. Top Mounting Bracket
8. Crown Molding Bracket
9. Crown Molding
10. Grease Cup

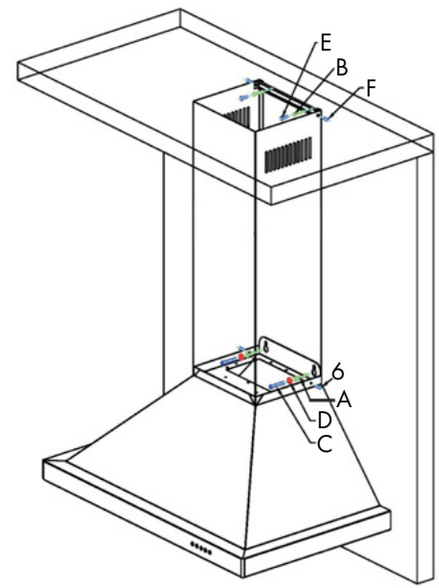

NOTE: Wall range hoods with single motors will come with a square to 6″ round transition piece and will include a back draft damper. The ducting with these range hoods is 6″. Dual motor wall hoods will come with a square to 8″ round transition piece without a back draft damper. The ducting with these range hoods is 8″ in diameter.

Use rigid ducting wherever possible. Try and minimize the use of elbows. It is recommended to establish 15-20″ of vertical airflow from the top of the hood before executing a 90° turn or elbow. More elbows and longer runs create higher static pressure. No more than two to three elbows are recommended. Use 40 feet of ductwork max. The hood comes with a grounded three prong plug that can be plugged into a 15 amp circuit.

DESIGNER WALL HOOD INSTALLATION

The recommended height to install your hood is 30″ minimum and 36″ maximum above the cooktop. For Outdoor (304 Series) hood installation, the unit must be installed at a minimum of 36″ and a maximum of 42″ above the grill.

1. Find the center of the wall where you are installing the hood. Make sure there is sufficient bracing, such as wooden beams, to hold the weight of the hood. Mark your center line and measure out from the center to find your two mounting points. Make sure your mounting points are level when you mark them. It is recommended to install the hood directly into wood supports. *Figure 1*
2. Mark the mounting points and install the two mounting screws provided leaving the heads out ¼″ to mount the hood. *Figure 1*
3. Mount the main body of the hood to the two screws and screw into place. *Figure 2*
4. Mount the crown molding bracket, centering it above the hood. *Figure 3*

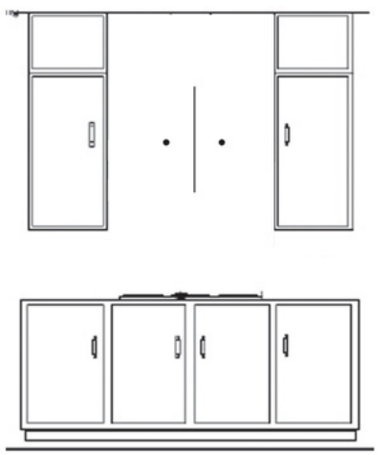

Figure 1

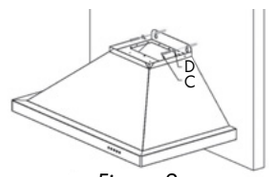

Figure 2

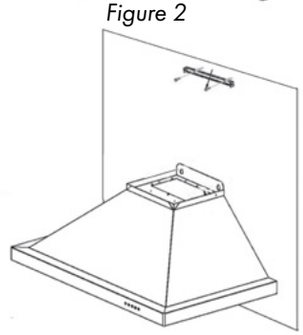

Figure 3

DESIGNER WALL HOOD INSTALLATION

5. Make your electrical and ducting connections. Try and minimize the use of elbows. More elbows and longer runs create higher static pressure. The hood comes with a grounded three prong plug that can be plugged into a 15 amp. circuit. The cord is 36″ long. *Figure 5*
6. Install the transition piece securing it with screws provided.
7. Connect the ducting to the transition piece using foil-backed tape to hold it into place. Attach the ducting to the range hood.

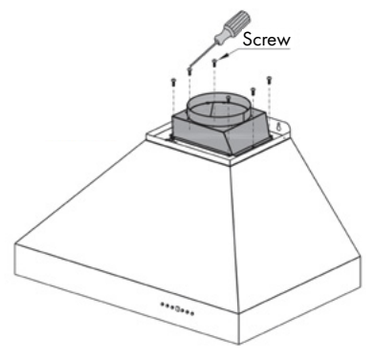

Figure 4

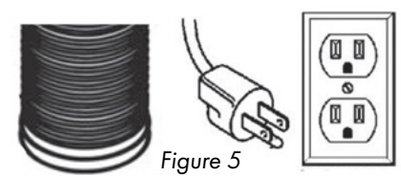

Figure 5

DESIGNER WALL HOOD INSTALLATION

8. Find the center of the wall where you are installing the hood. Make sure there is sufficient bracing to hold the weight of the hood. Mark your center line and measure out from the center to find your two mounting points. Make sure your mounting points are level when you mark them. It is recommended to install the hood directly into wood supports. *Figure 7*
9. Mark the mounting points and install the two mounting screws provided leaving the heads out ¼″ to mount the hood. *Figure 8*
10. Mount the main body of the hood to the two screws and screw into place. *Figure 9*

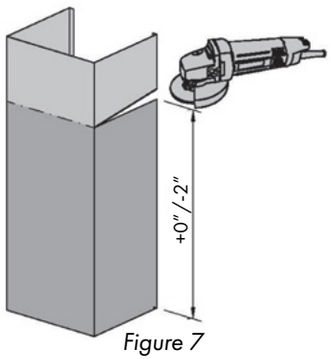

Figure 7

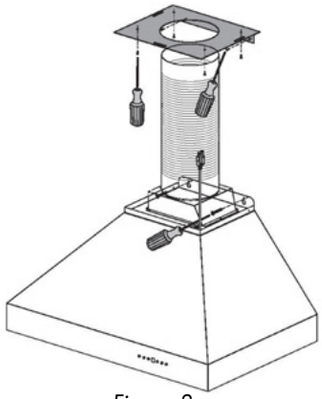

Figure 8

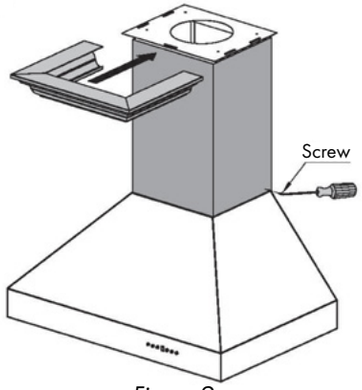

Figure 9

WALL CROWNSOUND® INSTALLATION

ELECTRIC POWER RATING

Frequency: 110V/50 Hz

Power: 10W

Watch Now

Installation Tutorial Video

1. Attach crown molding bracket to ceiling using hardware provided. *Figure 1*

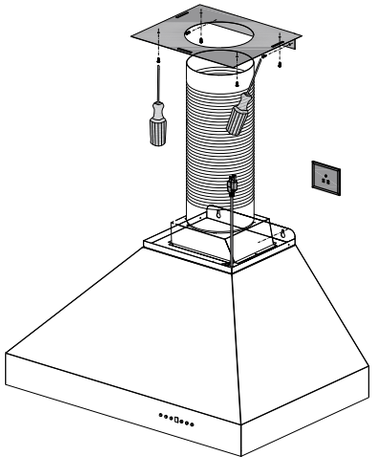

Figure 1

2. Attach ducting and electrical connections. Plug the speakers into an outlet behind the chimney. When the connection is successful, a chime will sound. *Figure 2*

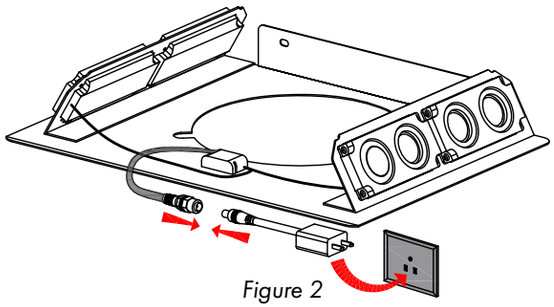

Figure 2

WALL CROWNSOUND® INSTALLATION

3. Extend the chimney up to the transformer. Slide the crown molding onto the crown bracket and secure into place. The crown should cover the gap. Ensure that it installs properly and is level. *Figure 3*

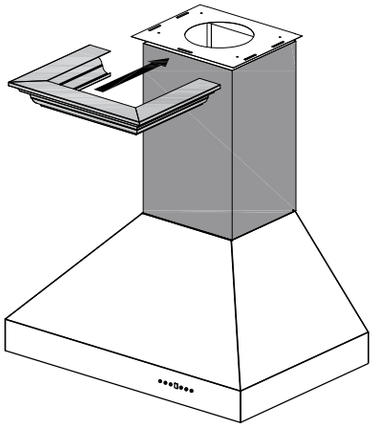

Figure 3

4. Open the phone's Bluetooth settings and find "ZLINE Audio." When the connection is successful, a chime will sound. *Figure 4*

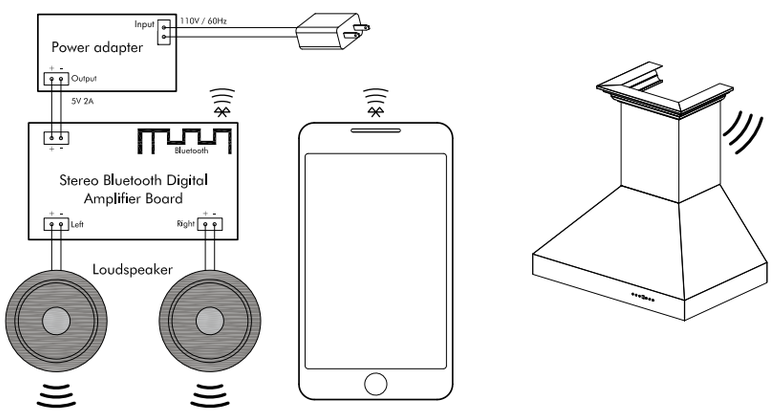

Figure 4

Bluetooth crown moldings carry a one year parts warranty. Replacement speakers are available from ZLINE. Call 1-614-777-5004.

ISLAND HOOD INSTALLATION

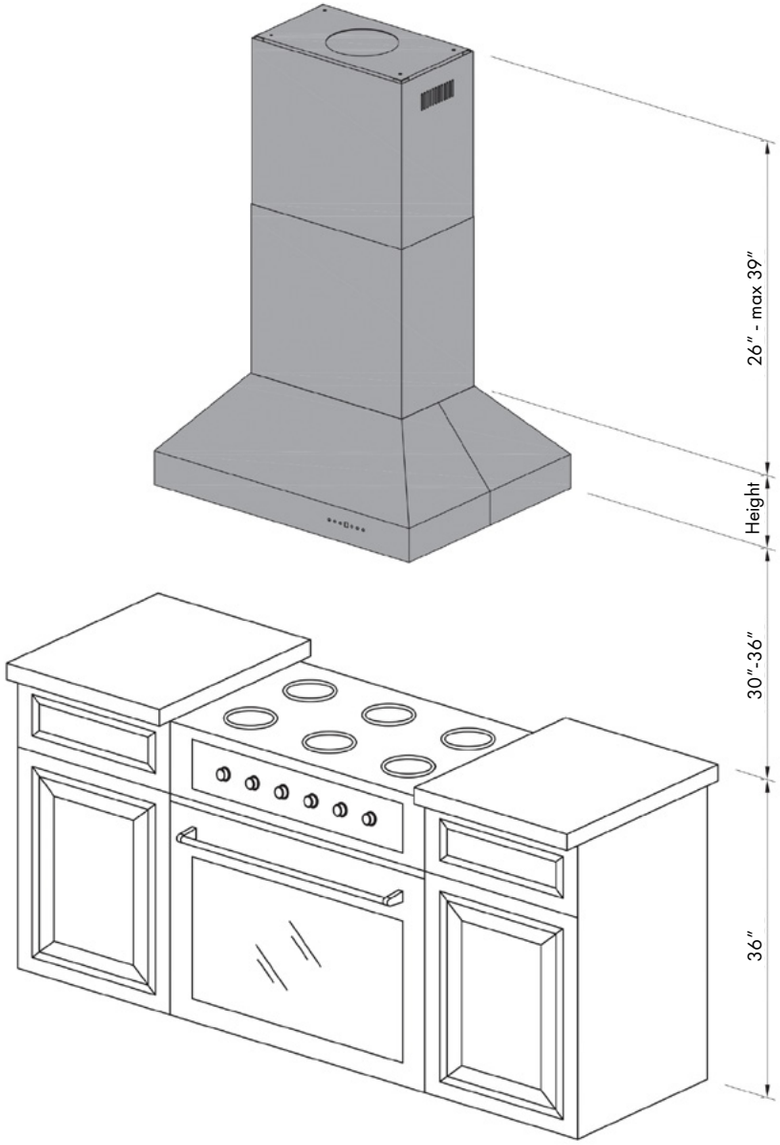

Scan Me

Installation Tutorial Video

ISLAND HOOD INSTALLATION

Please unpack your range hood when it is delivered and inspect to ensure all parts are included.

PARTS SUPPLIED

1. Main Hood with All Lights and Button Banks Pre-Installed
2. Chimney
3. Transition Piece (for 6″ or 8″)
4. Baffle Filters
5. Flexible Duct (for 6″ or 8″)
6. Packet of Screws and Anchors
7. Top Mounting Bracket
8. Grease Cup

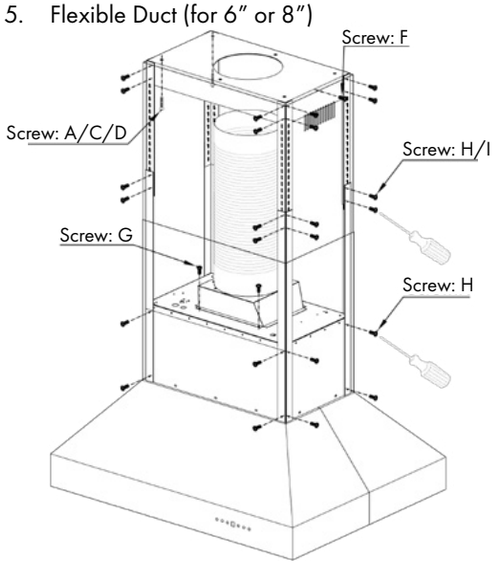

NOTE: Island range hoods with single motors will come with a square to 6˝ round transition piece and will include a back draft damper. The ducting with these range hoods is 6˝. Dual motor wall hoods will come with a square to 8˝ round transition piece without a back draft damper. The ducting with these range hoods is 8˝ in diameter.

Use rigid ducting wherever possible. Try and minimize the use of elbows. It is recommended to establish 15-20″ of vertical airflow from the top of the hood before executing a 90° turn or elbow. More elbows and longer runs create higher static pressure. No more than two to three elbows are recommended. Use 40 feet of ductwork max. The hood comes with a grounded three prong plug that can be plugged into a 15 amp circuit.

ISLAND HOOD INSTALLATION

The recommended height to install your hood is 30˝ minimum and 36˝ maximum above the cooktop. For Outdoor (304 Series) hood installation, the unit must be installed at a minimum of 36˝ and a maximum of 42″ above the grill.

1. Locate the center above the stove where the hood is to be installed. Ensure that the bracket will be secured to solid wood backing. Attach mounting bracket to the ceiling.
2. Attach the transition piece and ducting to top of the hood. *Figure 1 and 2*
3. Attach the four long angle iron pieces to the hood's motor housing. *Figure 3*
4. Determine desired height and attach the four short angle iron pieces to the long angle iron pieces that are attached to the hood. *Figure 3*
5. Install the duct work in the center of the ceiling bracket.

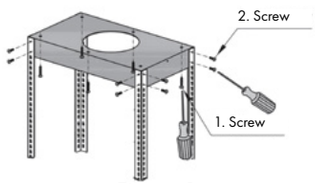

Figure 1

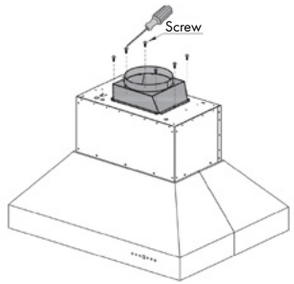

Figure 2

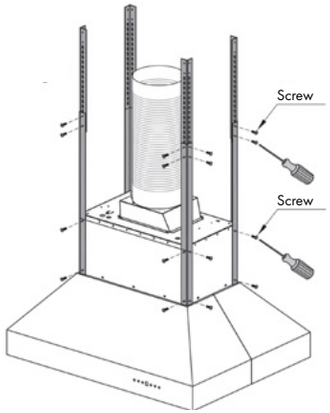

Figure 3

ISLAND HOOD INSTALLATION

1. Slide chimney pieces over the angle iron on the hood. Pull the electrical plug to the top of the chimney sections. *Figure 4*
2. Lift the hood to attach the angle iron to the ceiling bracket. Use screws provided to attach.
3. Make your electrical and ducting connections. Use rigid ducting wherever possible. Try and minimize the use of elbows. More elbows and longer runs create higher static pressure. No more than two to three elbows are recommended. The hood comes with a grounded three prong plug that can be plugged into a 15 amp circuit in the ceiling. The cord is 36″ long.
4. Slide top chimney piece up over the mounting bracket on the ceiling and secure it in place with the provided screws. *Figure 5*
5. Install stainless steel baffle filters. Before installing baffle filters, make sure that you insert the grease cup under the motor blower.

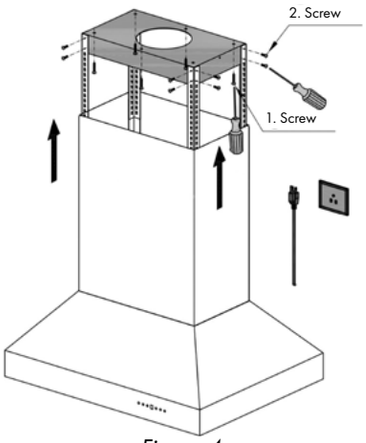

Figure 4

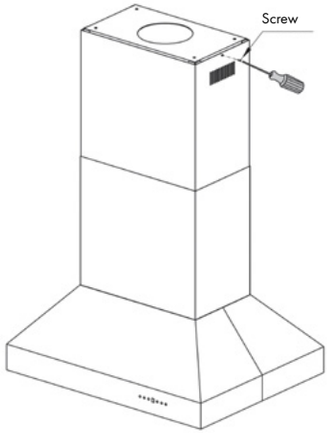

Figure 5

DESIGNER ISLAND HOOD INSTALLATION

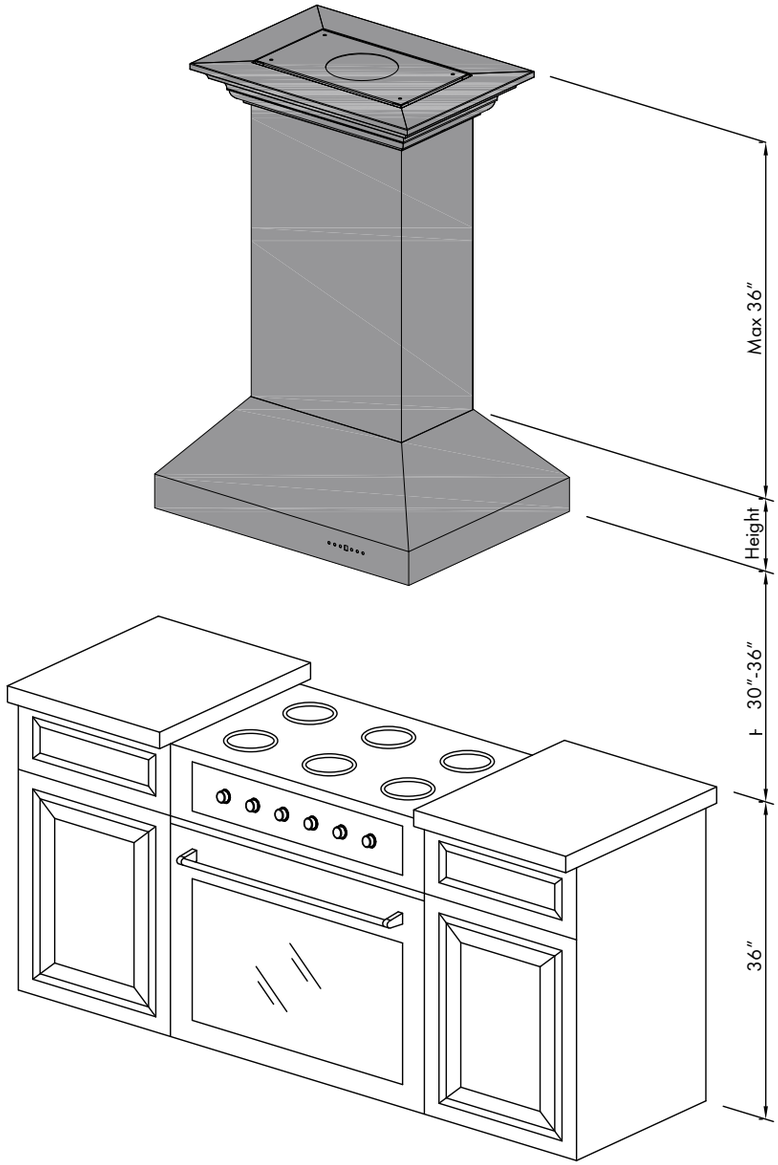

Scan Me

Installation Tutorial Video

DESIGNER ISLAND HOOD INSTALLATION

Please unpack your range hood when it is delivered and inspect to ensure all parts are included.

PARTS SUPPLIED

1. Main Hood with All Lights and Button Banks Pre-Installed
2. Chimney
3. Transition Piece (for 6″ or 8″)
4. Baffle Filters
5. Flexible Duct (for 6″ or 8″)
6. Packet of Screws and Anchors
7. Top Mounting Bracket
8. Crown Molding Bracket
9. Crown Molding
10. Grease Cup

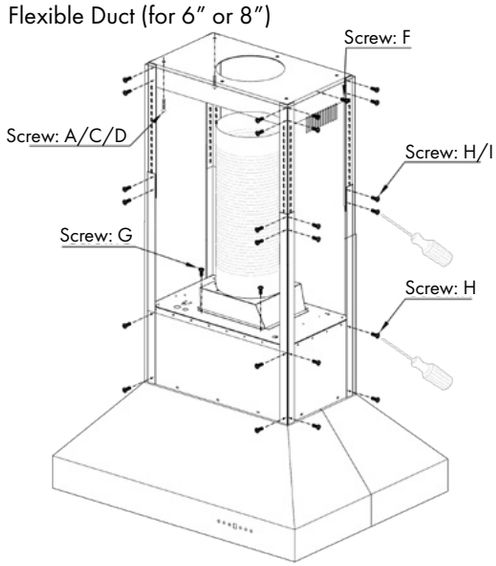

NOTE: Island range hoods with single motors will come with a square to 6˝ round transition piece and will include a back draft damper. The ducting with these range hoods is 6˝. Dual motor wall hoods will come with a square to 8˝ round transition piece without a back draft damper. The ducting with these range hoods is 8˝ in diameter.

Use rigid ducting wherever possible. Try and minimize the use of elbows. It is recommended to establish 15-20″ of vertical airflow from the top of the hood before executing a 90° turn or elbow. More elbows and longer runs create higher static pressure. No more than two to three elbows are recommended. Use 40 feet of ductwork max. The hood comes with a grounded three prong plug that can be plugged into a 15 amp circuit.

DESIGNER ISLAND HOOD INSTALLATION

The recommended height to install your hood is 30˝ minimum and 36˝ maximum above the cooktop. For Outdoor (304 Series) hood installation, the unit must be installed at a minimum of 36˝ and a maximum of 42″ above the grill.

1. Locate the center above the stove where the hood is to be installed. Ensure that the bracket will be secured to solid wood backing. Attach mounting bracket to the ceiling. *Figure 1*
2. Attach the transition piece and ducting to top of the hood. *Figure 2*
3. Attach the four long angle iron pieces to the hood's motor housing. *Figure 3*
4. Determine desired height and attach the four short angle iron pieces to the long angle iron pieces that are attached to the hood. *Figure 3*
5. Install the duct work in the center of the ceiling bracket.

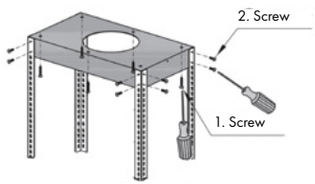

Figure 1

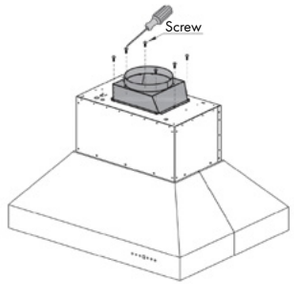

Figure 2

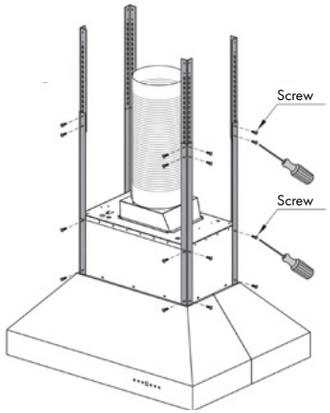

Figure 3

DESIGNER ISLAND HOOD INSTALLATION

6. Slide chimney pieces over the angle iron on the hood. Pull the electrical plug to the top of the chimney sections. *Figure 4*
7. Lift the hood to attach the angle iron to the ceiling bracket. Use screws provided to attach.
8. Make your electrical and ducting connections. Use rigid duct wherever possible. Try and minimize the use of elbows. More elbows and longer runs create higher static pressure. The hood comes with a grounded three prong plug that can be plugged into a 15 amp circuit. The cord is 36" long.
9. Slide top chimney piece up over the mounting bracket on the ceiling and secure it in place with the provided screws. *Figure 5*
10. Install stainless steel baffle filters. Before installing baffle filters, make sure that you insert the grease cup under the motor blower.

WARNING With any of our wooden or copper range hoods, you can custom cut the chimney to the desired height and the crown molding will hide any jagged cuts and offer a seamless transition to the ceiling.

WARNING The range hood is very heavy. Use the buddy system to keep the chimney in place while screwing in the hood into the brackets.

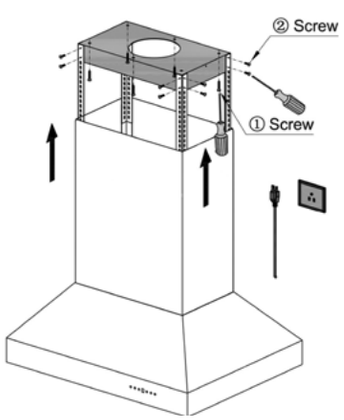

Figure 4

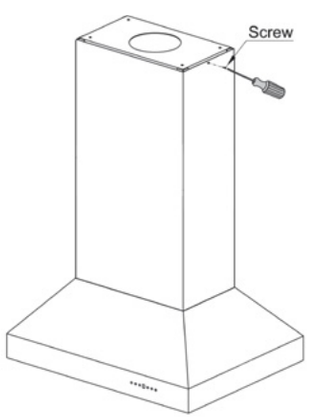

Figure 5

ISLAND CROWNSOUND® INSTALLATION

ELECTRIC POWER RATING

Frequency: 110V/50 Hz

Power: 10W

Watch Now

Installation Tutorial Video

1. Attach crown molding bracket to ceiling using hardware provided. *Figure 1*

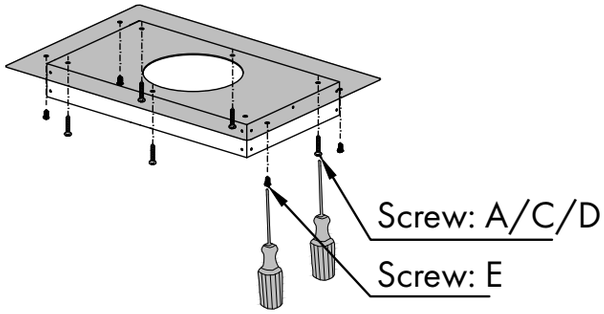

Figure 1

2. Attach ducting and electrical connections. Plug the speakers into an outlet behind the chimney. When the connection is successful, a chime will sound. *Figure 2*

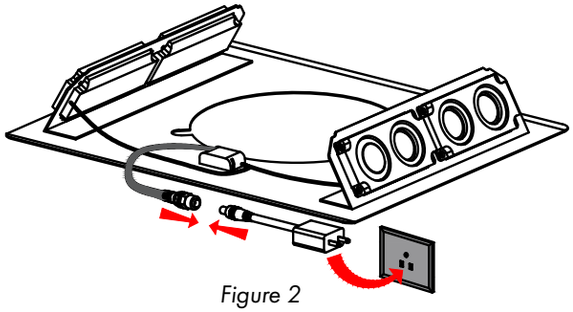
Figure 2

ISLAND CROWNSOUND® INSTALLATION

3. Extend the chimney up to the transformer. Slide the crown molding onto the crown bracket and secure into place. The crown should cover the gap. Ensure that it installs properly and is level. *Figure 3*

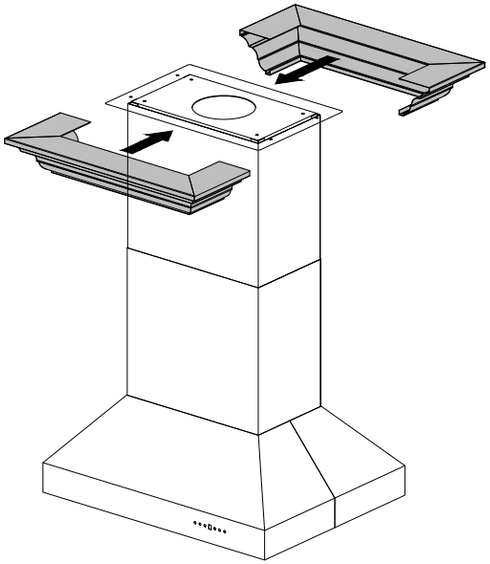

Figure 3

4. Open the phone's Bluetooth settings and find "ZLINE Audio." When the connection is successful, a chime will sound. *Figure 4*

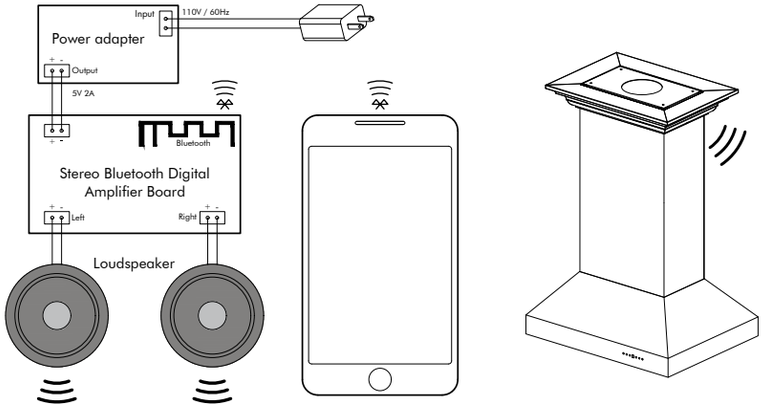

Figure 4

Bluetooth crown moldings carry a one year parts warranty. Replacement speakers are available from ZLINE. Call 1-614-777-5004.

UNDER CABINET INSTALLATION

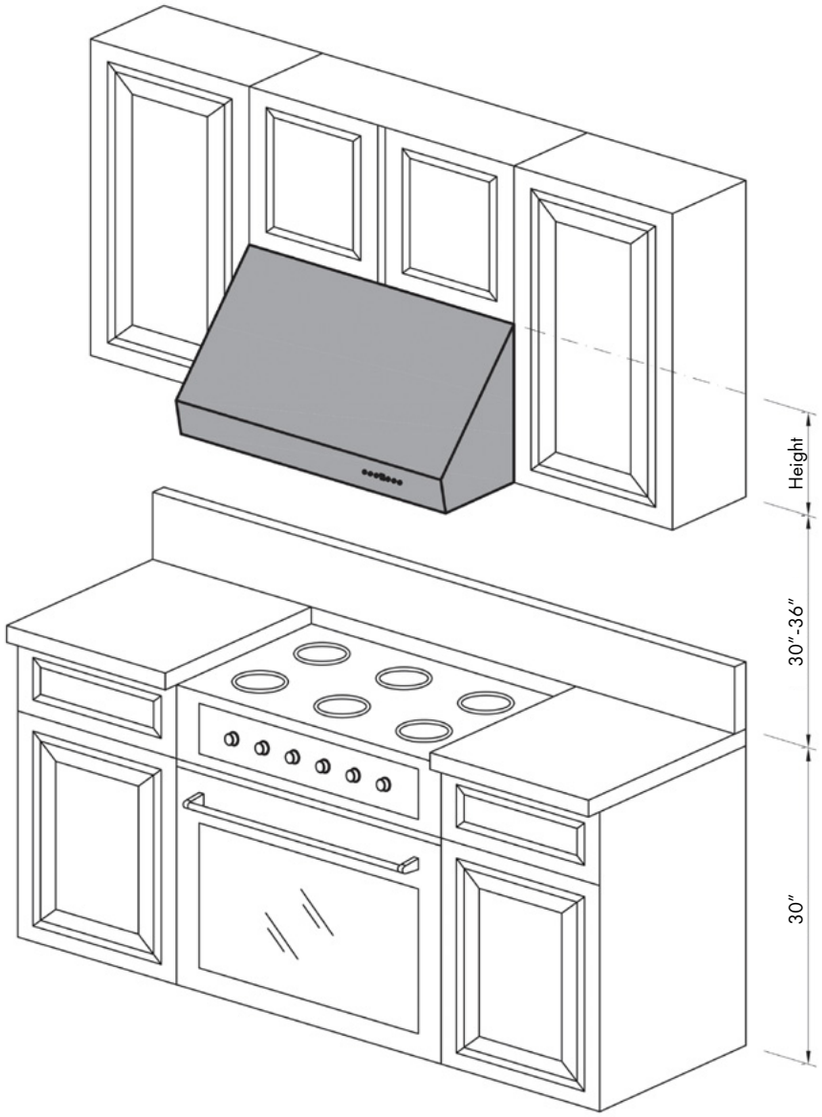

Scan Me

Installation Tutorial Video

UNDER CABINET INSTALLATION

RECIRCULATING KIT

1. Open package, locate all necessary hardware. Included should be 4 screws with 4 washers.
2. Line up the recirculating kit with the top of the range hood.

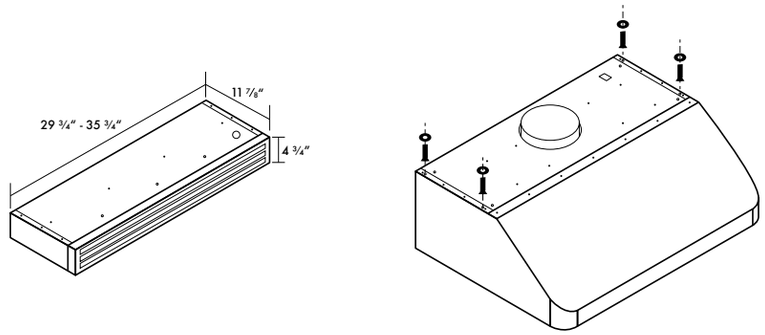

3. Secure the recirculating kit with the provided screws. Once secure, begin tightening each screw until the recirculating kit is flush with the range hood.

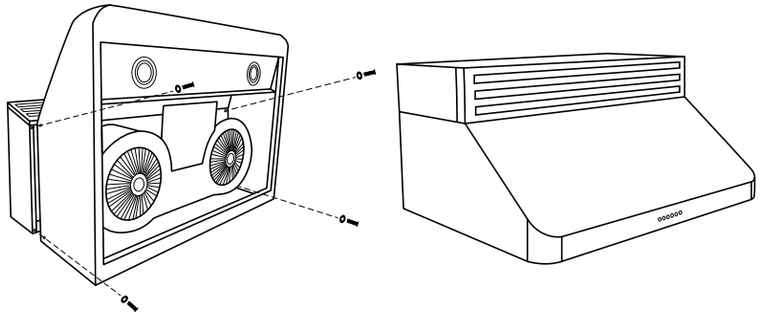

4. Install undercab per range hood installation guide.

UNDER CABINET INSTALLATION

PREPARATION

- Decide the location of the venting pipe from the hood to the outside.
- Check hood for clearance.
- For installing under the cabinet with recessed bottom, attach 4-inch wide wood filler strips (not provided) on each side.
- Puncture the knockout holes (for mounting under the cabinet) on the hood.
- Use rigid ducting wherever possible. Try and minimize the use of elbows. It is recommended to establish 15-20" of vertical airflow from the top of the hood before executing a 90° turn or elbow. More elbows and longer runs create higher static pressure. No more than two to three elbows are recommended. Use 40 feet of ductwork max. The hood comes with a grounded three prong plug that can be plugged into a 15 amp circuit.

1. Measure distance between stove top and the bottom of the range hood. A distance of 30" to 36" is recommended.
2. Attach mounting brackets to the back of the hood.
3. Mark the leveling point of the hood. Position two mounting screws on the wall, leaving 1/8" space away from the wall. Make sure that you are mounting the hood to a secure backing to hold the weight of the hood.
4. Tighten ducting (provided) with the hose clamp provided. Use silver or duct tape wherever needed.
5. Draw electrical wires through cabinet access opening, center the hood beneath the cabinet.
6. Align hood-mounting brackets to the screws on the wall and hook hood into place. Tighten screws to secure hood to the wall.
7. Connect ducting.

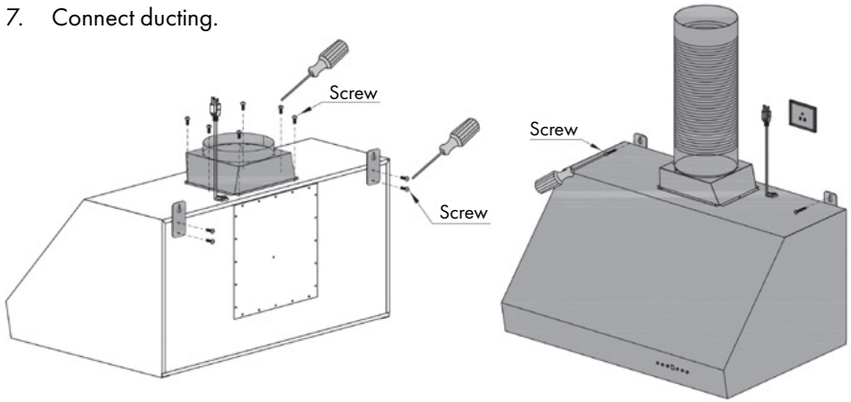

UNDER CABINET INSTALLATION

If you need to convert your under cabinet range hood to rear ducting, use the following instructions. Please note that converting the undercab to rear ducting is a modification of the standard hood and part of the installation process. It is recommended that the hood is inspected before this procedure. Only certain undercab models allow for rear ducting. Contact us at 1-614-777-5004 for more information on compatible models.

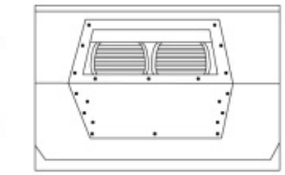

1. First remove the screws from the stainless steel panel. The small screws attach the panel to the range hood while the larger screws attach the panel to the motor.

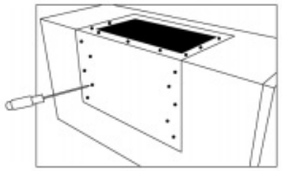

2. Remove the panel from the hood. The motor is attached to the panel. Do not disconnect the motor from the panel. The image to the right shows an example of the motor orientation.

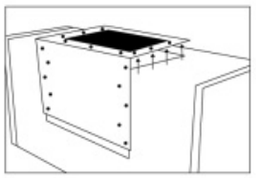

3. Remove the blower/motor from the range hood. Be careful not to pull and disconnect the attached wiring.

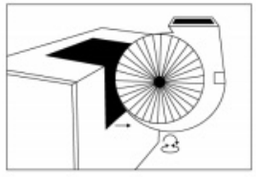

4. Rotate the blower/motor so that the opening is facing out the rear of the range hood.

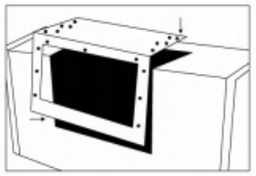

5. Replace the panel so that the opening aligns with the opening of the blower/motor.

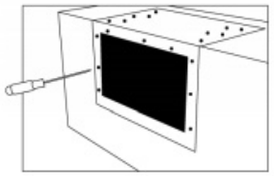

6. Attach the panel to the range hood then attach the blower/motor to the panel using the larger screws.

INSERT INSTALLATION

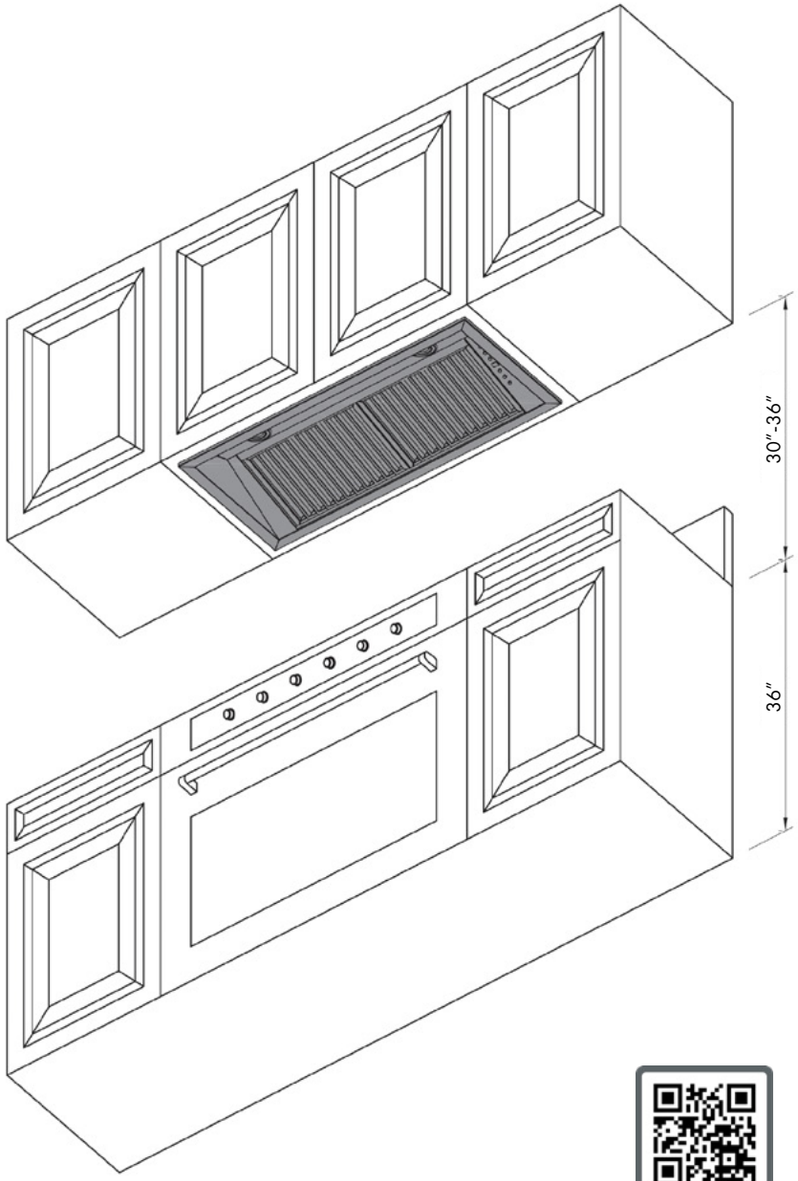

Scan me

Installation Tutorial Video

INSERT INSTALLATION

When installing a range hood insert, it is recommended to install the unit at a minimum of 30˝ from the cooktop. For outdoor range hood inserts it is recommended to install the unit at a minimum of 36˝ and a maximum of 42″ from the grill top.

Use rigid ducting wherever possible. Try and minimize the use of elbows. It is recommended to establish 15-20″ of vertical airflow from the top of the hood before executing a 90° turn or elbow. More elbows and longer runs create higher static pressure. No more than two to three elbows are recommended. Use 40 feet of ductwork max. The hood comes with a grounded three prong plug that can be plugged into a 15 amp circuit.

1. Unpack contents of the hood. Attach transition piece and ducting to the top of the range hood insert. *Figure 1*
2. Using L brackets and screws provided, attach L brackets to each side of the insert.
3. Lift the range hood insert into cabinet or custom hood structure. *Figure 2*
4. Follow instructions for wall hood mount to mount the range hood.

NOTE: Due to some installation differences with custom hoods the L brackets may not work. Before installing insert please determine if the insert will work for your installation needs. You may pre-drill holes into the insert unit to accommodate for custom hood installations.

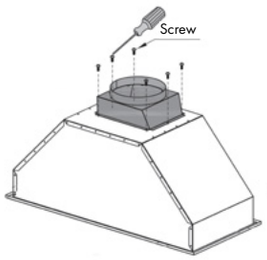

Figure 1

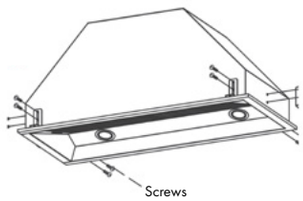

Figure 2

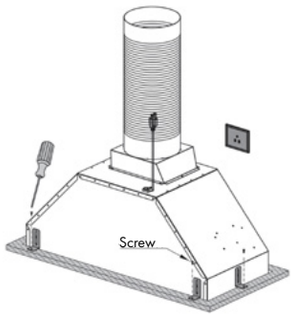

Figure 3

REMOTE BLOWER INSTALLATION

When installing your new remote blower type range hood, follow the instructions for the type of hood you are installing. Remote blowers are available with wall, island, under cabinet, and insert range hoods.

Make certain to connect the electrical cord to the hood and plug the blower motor in to test the unit.

1. Run duct work into the area that you will install the remote from your range hood.
2. Fasten ducting to the range hood using a hose clamp and silver/duct tape.
3. Use the least amount of elbows as possible.
4. Mount the remote blower to studs only.
5. Run electrical cord (provided) back to the range hood.
6. Install a regular outlet with a 15 amp circuit.
7. The hood comes with a grounded 3 prong grounded plug. The cord is 26″ long.
8. Run duct work to the outside of the house and add a back draft damper outside.

NOTE: The remote blower must be kept inside the home, attic, or crawl space etc. Never try to install a remote blower outside of the home.

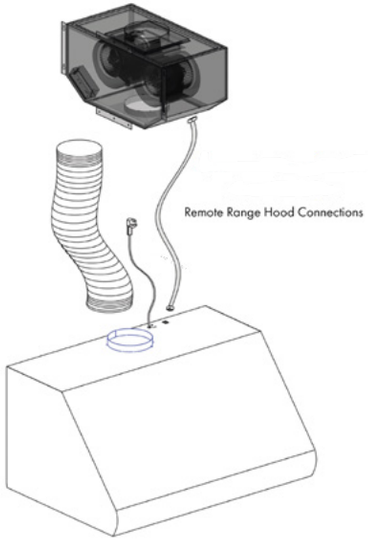

REMOTE BLOWER INSTALLATION

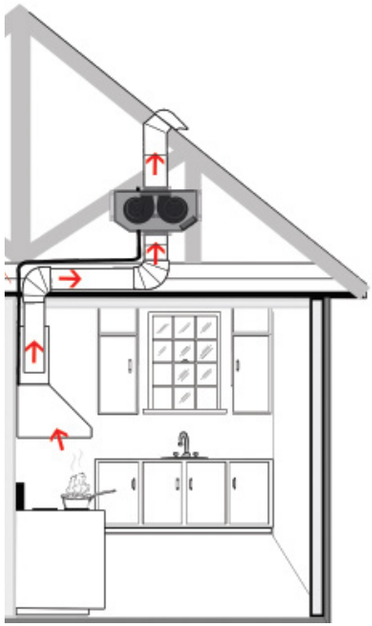

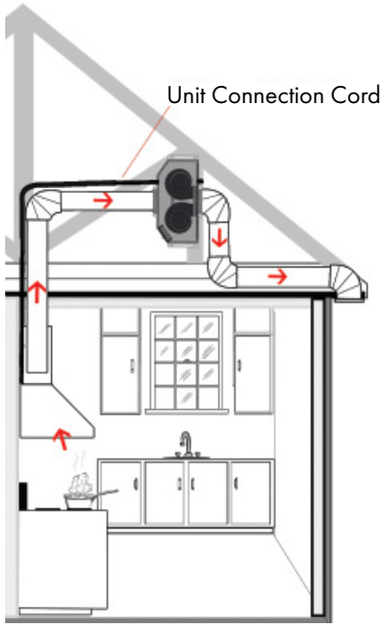

The Remote Blower is designed for our Remote Range Hoods. This unit is installed remotely in the interior of your home. This provides venting, but with reduced noise.

T85 Remote Blower—Single Motor

(This Blower must be used with Remote Blower Hood)

Airflow: 400 (CFM)

Noise Level: 1.2 / 2.6 / 4.2 / 6.5 (Sones)

Dimensions: 26.14 x 14.6 x 13

T95 Remote Blower—Dual Motor

(This Blower must be used with Remote Blower Hood)

Airflow: 280 / 460 / 670 / 1200 (CFM)

Noise Level: 1.2 / 2.8 / 5.0 / 7.0 (Sones)

Dimensions: 26.14 x 14.6 x 13

OPERATION

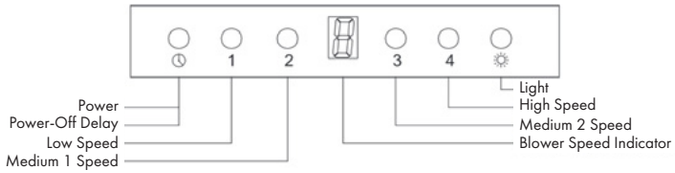

Button functions

Power: Turn ON/OFF the range hood and activate power-off delay timer.
Light: Turn ON/OFF (Some models will have bright, dim, and OFF settings.)
Blower Speed Indicator: Shows current blower (motor) speed (1-4).

1- Low Speed: Light frying/boiling.
2 - Medium Speed: Frying/wok cooking/heavy boiling.
3 - High-Grilling: Intensive frying and wok cooking.

Adjusting the blower (motor) speed:

- Press the power button once to turn on the system.
- Press the speed buttons for the desired speed. May be increased and decreased.
- The blower speed indicator shows the blower speed level.

Adjusting the timer function:

- Turn the hood on at any speed and press the power-off delay button to enter timer mode, a 3 flashes in the display, power-off delay digital timer will begin countdown.
- When the blower speed indicator reaches zero, the blower will shut down.

Adjusting the light:

- Turn ON/OFF (Some models will have bright, dim, and OFF settings.)

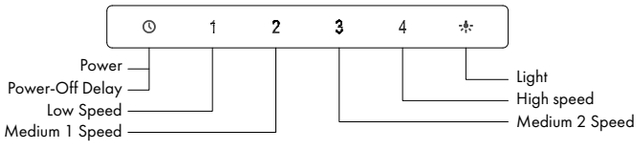

Button functions

Power: Turn ON/OFF the range hood and activate power-off delay timer.
Light: Turn ON/OFF (Some models will have bright, dim, and OFF settings.)
Blower Speed Indicator: Shows current blower (motor) speed (1-4).

1- Low Speed: Light frying/boiling.
2 - Medium Speed: Frying/wok cooking/heavy boiling.
3 - High-Grilling: Intensive frying and wok cooking.

Adjusting the blower (motor) speed:

- Press the power button once to turn on the system.
- Press the speed buttons for the desired speed. May be increased and decreased .
- The selected blower speed will light up when chosen.

Adjusting the timer function:

- Turn the hood on at any speed and press the power-off delay button to enter timer mode, The"power" flashes in the display, power-off delay will begin countdown. After five minutes , the blower will shut down.
- When the blower speed indicator reaches zero, the blower will shut down.

Adjusting the light:

- Turn ON/OFF (Some models will have bright, dim, and OFF settings.)

CHANGING PARTS

HOW TO CHANGE OUT THE BUTTON PANEL

1. Remove baffle/aluminum filters.
2. Locate back of button panel.
3. Remove screws from each side of the button panel.
4. Disconnect button panel from cord connecting to circuit board.

NOTE: Never work on or clean the range hood while power is ON. Always unplug the unit or switch the electrical breaker to the off position.

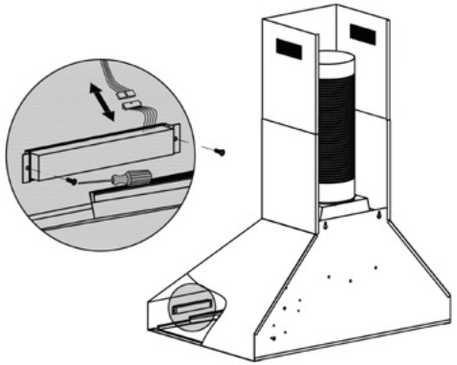

Scan Me

Installation Tutorial Video

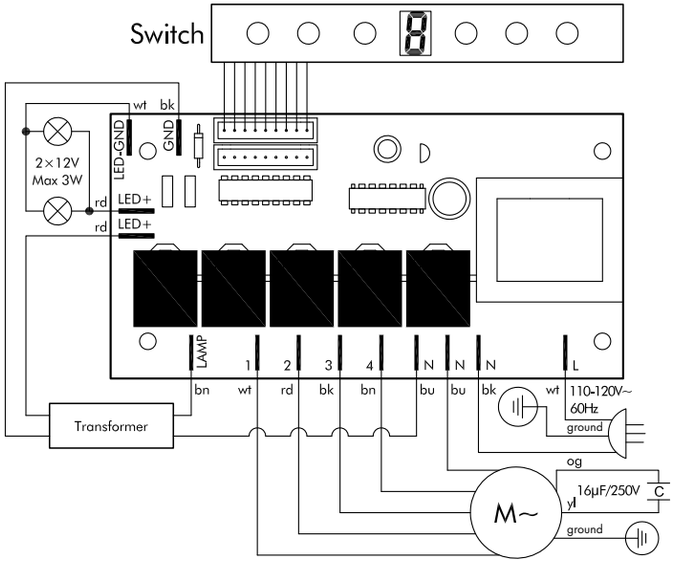

CHANGING PARTS

HOW TO REPLACE THE CIRCUIT BOARD

1. Turn the power off at the breaker and unplug the Range Hood.
2. Remove all screws from the top of the circuit board cover.
3. Take a picture of the wiring layout (this will help you put the circuit board back together properly).
4. Remove the wiring connected to the circuit board.
5. Remove the screws from the circuit board.
6. Replace the wiring and screws to reassemble the new circuit board per the diagram below.

NOTE: Never work on or clean the range hood while power is ON. Always unplug the unit or switch the electrical breaker to the off position.

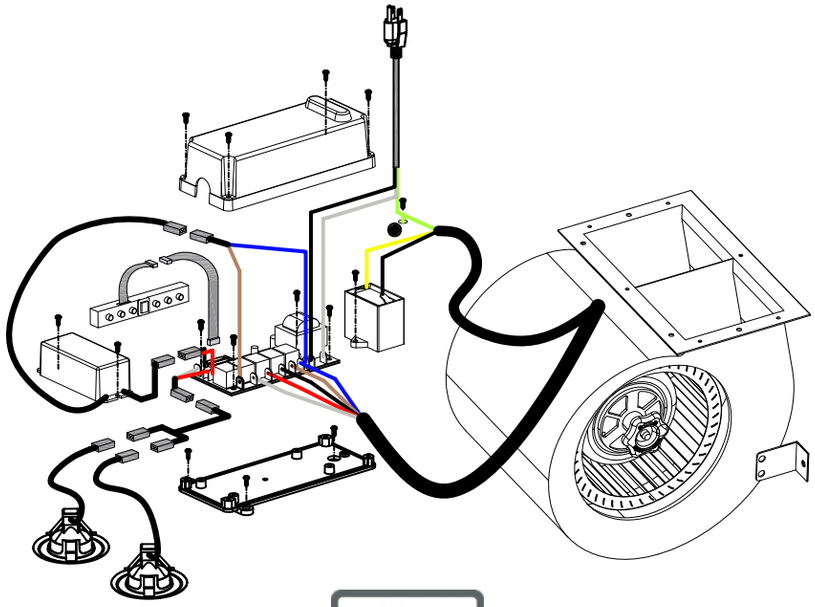

Scan Me

Installation Tutorial Video

CHANGING PARTS

REPLACING THE LIGHT BULBS IN YOUR RANGE HOOD

1. Remove baffles.
2. Squeeze the old LED light casting out until it falls out of the socket.
3. Disconnect the plug wires from the light wire.
4. Reconnect the LED plug into the light wire.
5. Press light assembly into the socket.

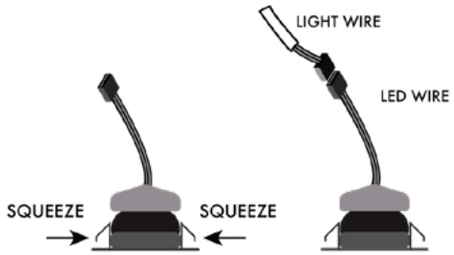

NOTE: Never work on or clean the range hood while power is ON. Always unplug the unit or switch the electrical breaker to the off position.

Scan Me

Installation Tutorial Video

CHANGING PARTS

PROFESSIONAL SERIES BAFFLE FILTER CHANGE

Covering Models 696, 697, 697i (Island), KECOM, KECOMi (Island), 695, 698, and 721 Inserts

Professional series hoods are equipped with 2 removable dishwasher safe baffle channels (one for series 695 and 698 inserts) that the baffle filters rest in. To install the channels, place inside the hood, right under the front and back edges of the hood. The channel is kept in place by installation pieces on the sides and back of the baffle channel. *Figure 1*

NOTE: Never work on or clean the range hood while power is ON. Always unplug the unit or switch the electrical breaker to the off position.

NOTE: The baffle channels may already be in place. *See Figure 1 for positioning.*

To install filters, first install the removable baffle channel. Next, take the filter and put one end into the permanent baffle channel. Push back into place and pull down, sliding the bottom of the filter in. Position filters so that they rest on both lips of the baffle channels. The edges of the baffle filters should have open slats on the outside edges. *Figure 2*

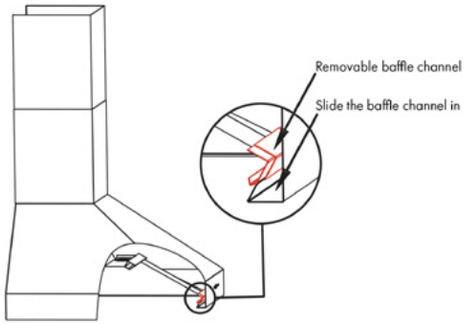

Figure 1

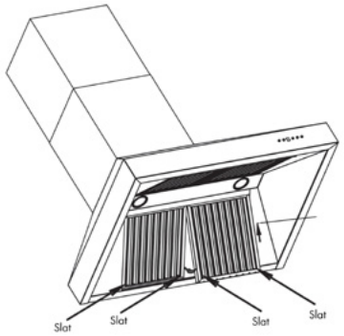

Figure 2

WARNING

WARNING: Edges on the baffle filters and baffle channels may be sharp- please use caution when installing and removing. Do not attempt to disassemble baffle filters, as the process may result in injury.

CHANGING PARTS

BAFFLE FILTER

The baffle filter is equipped with a knob. To remove from the hood, pull back toward the wall and down.

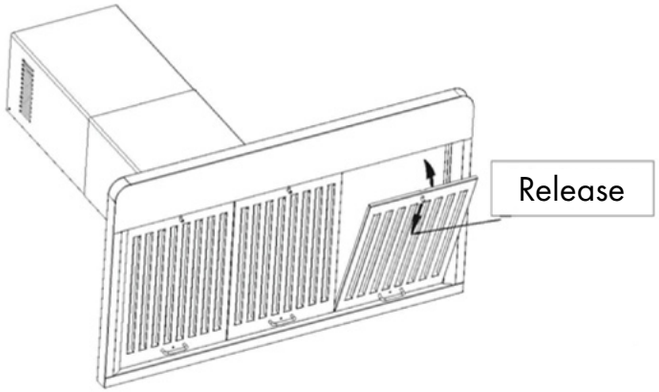

CHANGING PARTS

CHANGE/REPLACE CAPACITOR:

1. Remove screws from the circuit board cover.
2. Remove screws from compactor.
3. Remove both wired connections from the capacitor.
4. Connect new capacitor with wire connectors.
5. Replace screws in cover.
6. Repeat operation if dual motor.

NOTE: Some units have more than one motor. If you have a unit with dual motors, there will be two capacitors.

NOTE: Never work on or clean the range hood while power is ON. Always unplug the unit or switch the electrical breaker to the off position.

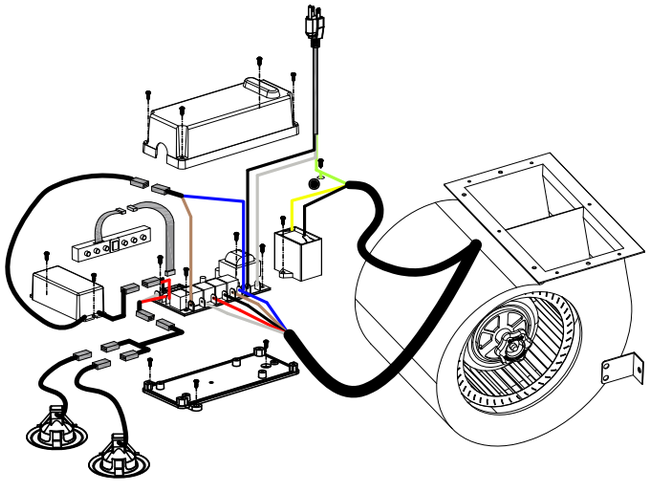

Scan Me

Installation Tutorial Video

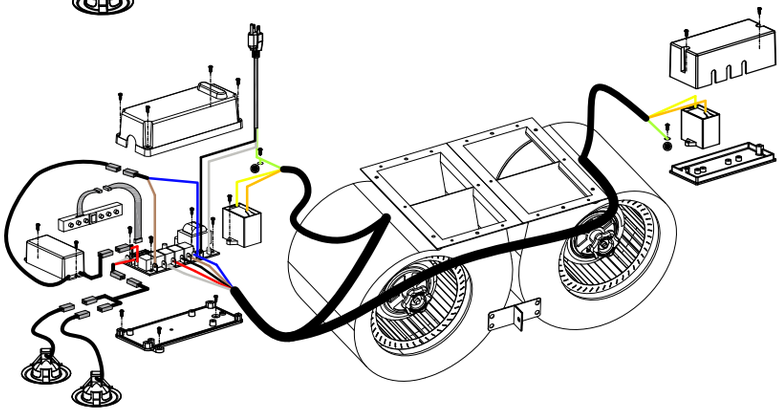

CHANGING PARTS

REPLACE OR CHANGE CHARCOAL FILTERS:

It is recommended to direct vent the hood whenever possible.

If your situation does not allow for a direct vent install, carbon filters are available to recirculate the air through your hood.

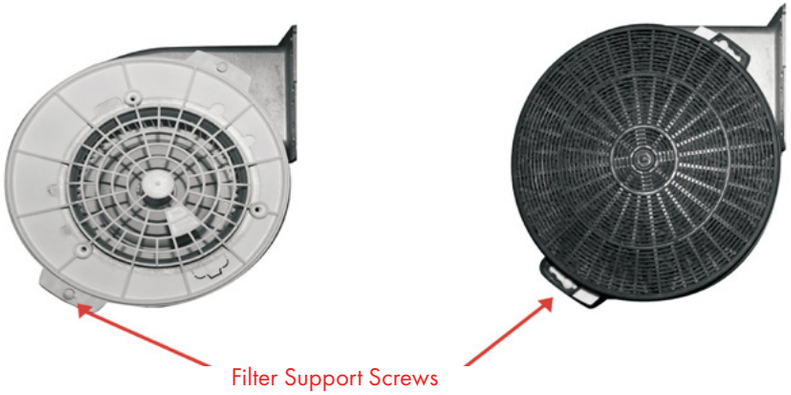

1. Remove the stainless steel or aluminum filters from the bottom of the hood.
2. Locate the existing raised support screws on each side of the internal motor(s).
3. For each motor side, position the filter over its support screw and rotate to lock into place.

NOTE: Replacement is recommended after 130 hours of cooking or 6 months of operation. Replace more often if your cooking habits generate more grease.

NOTE: Never work on or clean the range hood while power is ON. Always unplug the unit or switch the electrical breaker to the off position.

Scan Me

Installation Tutorial Video

CHANGING PARTS

HOW TO CLEAN, INSTALL, OR REPLACE THE GREASE CUP:

A removable grease cup is provided to catch any excess grease at the bottom of the motor. Remove it every 2 to 3 months, wash it, then re-install it.

NOTE: Never work on or clean the range hood while power is ON. Always unplug the unit or switch the electrical breaker to the off position.

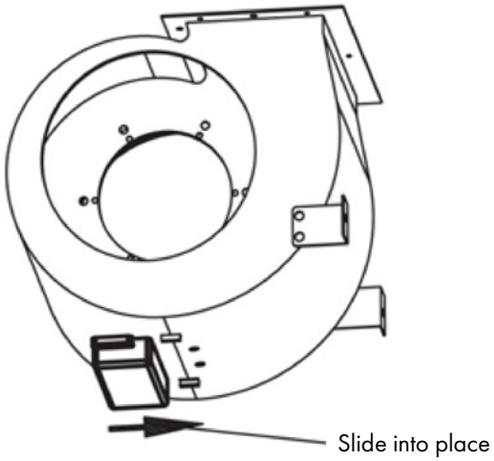

Scan Me

Installation Tutorial Video

CHANGING PARTS

REPLACE OR CHANGE TRANSFORMER:

1. Remove the screws from the transformer.
2. Remove the two connections to the lights.
3. Remove the two wired connections from the circuit board (you must remove the circuit board cover).
4. Install the new connections from your new transformer (be certain the correct wires are connected).
5. Reinstall the cover for the circuit board with screws.
6. Replace all screws in the transformer.
7. Reconnect the lights to the transformer.

NOTE: On units made before 2017 with three or more lights, there will be dual transformers.

NOTE: Never work on or clean the range hood while power is ON. Always unplug the unit or switch the electrical breaker to the off position.

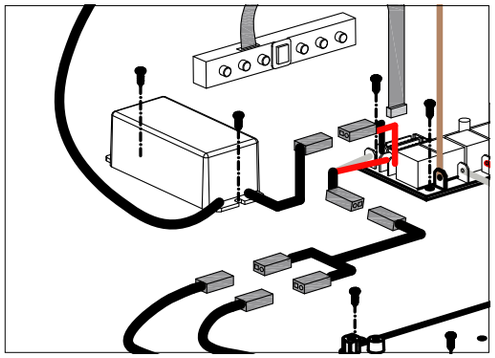

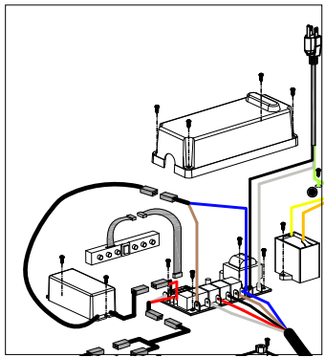

Scan Me

Installation Tutorial Video

CHANGING PARTS

SINGLE MOTOR ELECTRICAL DIAGRAM

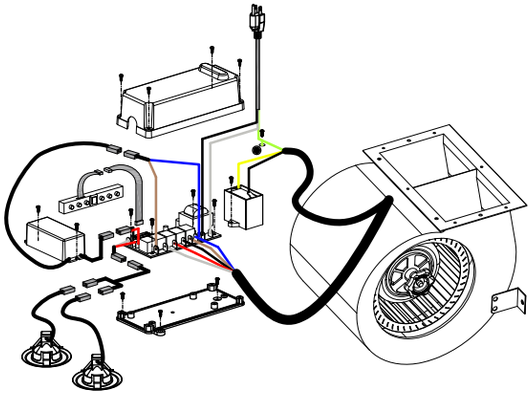

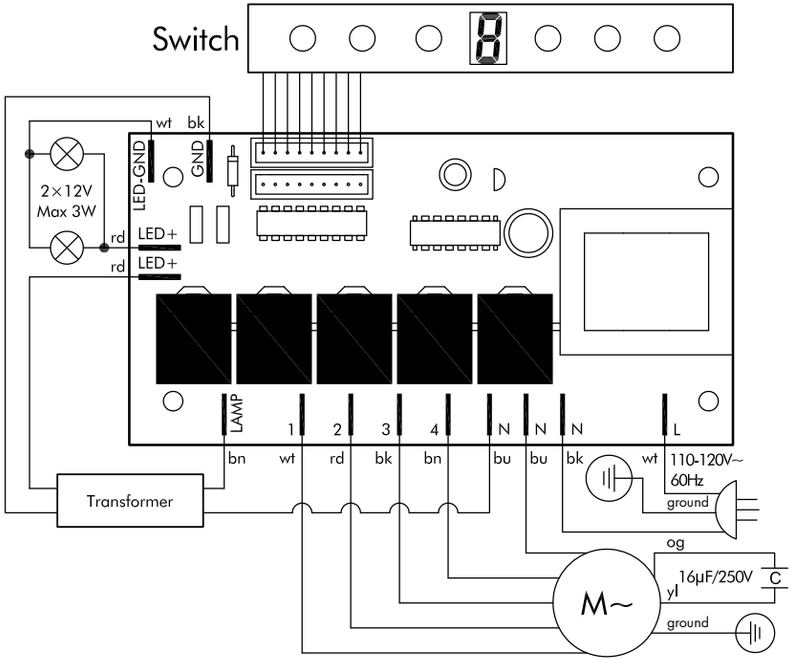

CHANGING PARTS

DUAL MOTOR ELECTRICAL DIAGRAM

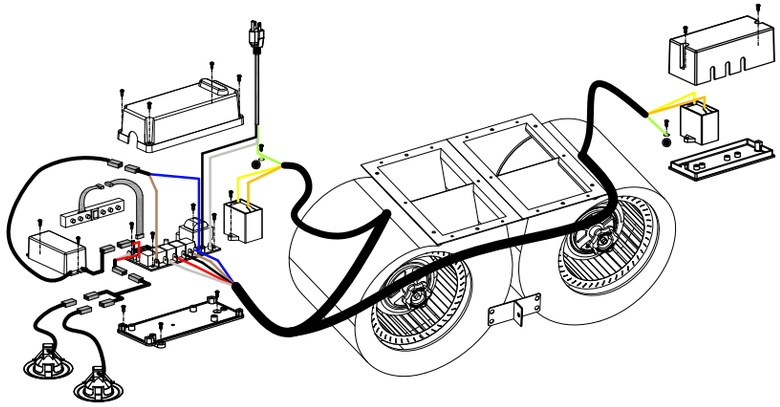

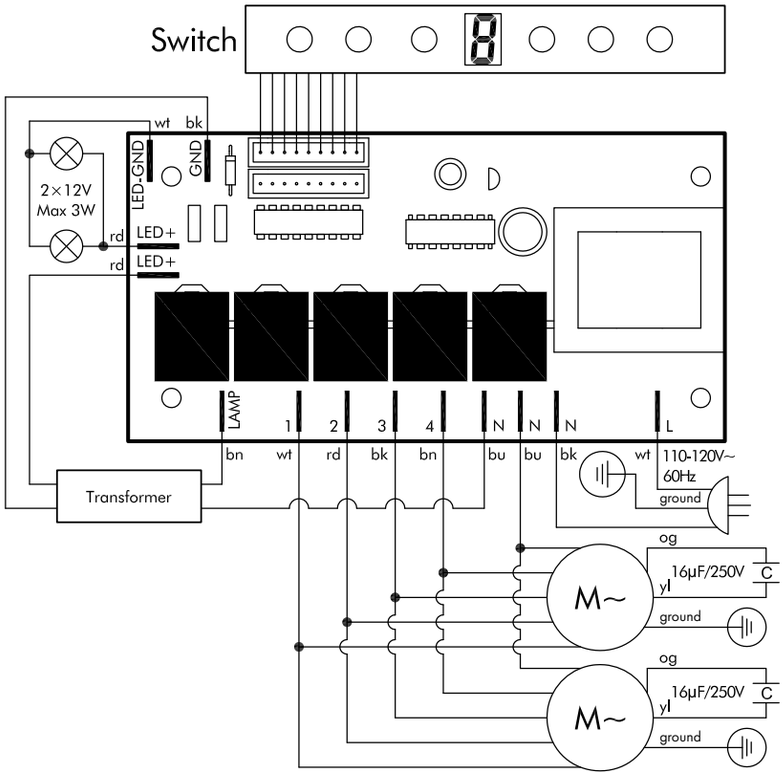

TROUBLESHOOTING

Where are ZLINE products manufactured?

All ZLINE products are manufactured in ZLINE facilities overseas, including: Germany, Italy, and China.

Are ZLINE range hoods considered type 1 or type 2?

Type 1 - Range hoods that are used with appliances that produce grease and smoke.

Are ZLINE products meant for residential or commercial use?

Residential use.

Why is my range hood white?

This is a protective layer that is placed on all of our range hoods to prevent shipping damage. This should be easy removable by peeling it off.

Why are my range hood baffle filters blue?

This is a protective layer that is placed on our baffle filters to prevent shipping damage. This should be easy removable by peeling it off.

What size hood should I choose for CFM purposes?

1. You must determine the output of the cooktop burners of your range; this is measured in British Thermal Units (BTUs).
2. You should provide 100 CFM of airflow per linear foot of range. To determine this, divide the BTU rating of your range by 100. This will give you the rating of the Cubic Feet per Minute (CFM's) rating needed of your range hood. For example: If your range is 35,000 BTUs, your range hood should have a rating of 350 CFM's or greater.
3. To determine the size of the range hood for satisfactory capture, it is recommended to go at least one size larger than your range, about 3˝ to 6˝ wider. At minimum, it should be the same size of your range. The range hood width should cover 100% of the back burners and 50% of the front burners.
4. The height of your range hood should be between 30˝ to 36˝ above your cooktop. Example: 60,000 BTU's = 600CFM's

TROUBLESHOOTING

How loud is the range hood?
A sone is measure of loudness, the higher the sone rating, the louder the sound of the hood. The sound of one sone is comparable to that of a quiet refrigerator. Keep in mind that other factors such as the size of the blowers can affect the loudness of the range hood. The higher the CFM, the louder the sone rating will be.

Can my hood be ductless?
Ideally, it is better to duct your range hood to the outside, but if this is not possible, ductless is a great alternative. Many of our range hoods do have the capability to be converted to ductless. Ductless is when the air circulates through the carbon filter removing odors, grease, smoke etc. The clean air is re-circulated back into your home through carbon/charcoal filters. These filters are not reusable and will need to be changed out once every six months, depending on cooking style and frequency.

What type of stainless steel are our hoods made of?
Our indoor stainless steel hoods are made with a 430 stainless steel. Our outdoor hoods are made of 304 stainless steel. This type is stronger and more resistant to rust and corrosion.

Can I stain my unfinished hood?
No, unfinished hoods are only compatible with paint.

Do I need a chimney extension or a shortening kit when I purchase my hood?
Selected hoods come with one chimney piece for ceilings ranging from 9′ to 12′ tall. Ensure you check the chimney dimensions for your hood under the product specifications beforehand.

How many amps are produced on the highest fan setting?
For dual motors, it is up to 3.317 amps on the highest fan setting. For single motors, it is 1.678 amps.

TROUBLESHOOTING

What type of motor is in the range hoods?
Our hoods have a squirrel cage motor.

Is the width of my range hoods description, the actual size?
No, the actual size of the range hood will be slightly less than the generic description of the range hood. For instance: a 30″ range hood will most likely be 29-1/2″. Refer to your particular model for the exact width.

How do I clean my grease filter and how often?
Your grease filter should be washed with hot water and detergent once per month or placed in a dishwasher for cleaning. Make certain the filter is completely dry before reinstalling. Re-place the grease filter if it becomes damaged or too dry to clean.

Can I clean my charcoal, odor filter?
No, charcoal odor filters cannot be washed and must be discarded and replaced, when they become noticeably dirty, have stopped filtering the odors, or at least once per year.

What is the best way to duct my range hood?
To maximize your range hood's performance, match your duct size to the original size of the fan's ducting. Use the shortest amount of ducting as possible and keep the ducting as straight as possible. Do not exceed 40 feet of ducting. For every elbow deduct five feet from the total.

Do I have to exhaust the range hood to the outdoors?
Yes. If installing a range hood that has ductwork connected to it (any hoods that do NOT recirculate the air back into the room), to properly exhaust the air, be sure to duct the air out side. DO NOT vent exhaust air back into the spaces within the walls, ceilings, attics, crawl spaces, or garages. A buildup of humidity and grease could cause damage and/or a fire risk to your home.

TROUBLESHOOTING

My hood is operating, but the air is moving slower than normal.
Check the filter for buildup and clean or replace it if needed. If the difficulty still persists, check for obstructions in the ductwork. A common obstruction is buildup in the roof or wall cap, such as: bird nests or other debris.

What is make-up air?
When the range hood ventilates the air out of the room, the air vented must be replaced, this is called make-up air. We do not currently provide a make-up air unit. NOTE: Always consult any applicable building codes in your area in regards to minimum and maximum air flow rates. Certain states may require additional items such as make-up air for larger CFM range hoods (typically over 300 CFM).

How do I order replacement parts?
Replacement parts can be ordered by contacting our customer service department at 1-614-777-5004. All hoods have a three year warranty on parts. Have your model number or order number available when calling customer service.

How many devices can the Bluetooth speakers sync to at a time?
Only 1 device can sync at a time.

What is the decibel rating of the Bluetooth speakers?
Up to 100 decibels.

What is the range of the speakers? What's the maximum distance for the connection to work?
Up to 50 feet. If the connection is weak, move closer to the speakers or remove obstacles that are between the device and the speakers.

"ZLINE Audio" won't appear in the Bluetooth settings.
Check if the electrical connections are secure. A chime will sound if the connection is successful. If "ZLINE Audio" still will not appear, call ZLINE at 1-614-777-5004 for a replacement.

TROUBLESHOOTING

My range hood will not operate.
1. Check that there is power to the range hood. The most common issue is that the circuit breaker is off or the fuse has blown.
2. Make sure the speed has been selected at the range hood controls.
3. Turn off the power to the range hood and check that all wires are properly connected. Refer to your specific model's installation instructions for proper wiring.

My hood is making a rattling noise.
This is probably attributed to one of the following:
1. The motor is loose—Turn off the power and remove the filter and check that all screws are secure and tight around the motor.
2. The duct work connection is loose—Turn off the power to the unit and check that the ductwork connection to the pipe is tight. Add duct tape if necessary.

My range hood does not have power.
1. Check electrical connections.
2. Check that all connections to the circuit board are secure.
3. If problem still exists, please call our customer service line.

TROUBLESHOOTING

My range hood is not pulling.

- Was the unit plugged in and was the fan checked before installation?
- What distance is the hood mounted above the cook top?
    - Indoor (30”-36”), outdoor (36”-40”)
- Is the range hood width the correct size for the cook top?
- Outdoor units should be at least 1 size larger, if not 2
- Does the hood have enough BTU output in relationship to either their gas or electric stove cook top?
    - BTU output per burner/100 - for gas
    - Wattage output per burner/10 - for electric
- Are the baffle filters or mesh filters installed correctly? When were they last cleaned?
- Is the ducting clear?
- Is the damper opening properly once the hood is turned on?
- Is there air coming off the top of the hood?
- Is there air coming out of the upper chimney section?
- When tissue is placed on the baffle filters under the hood, does it hold the tissue?
- How many elbows and how long is the ducting run?
    - Should be no more than 2-3 elbows and no more than a 40 foot run to exit, for every elbow subtract 5 feet
- Is the air recirculating? When were the carbon filters last changed?
    - The carbon filters need changed every 3-6 months based on your cooking habits.

TROUBLESHOOTING

Noisy Motor

- Were the fan speeds checked fan speeds prior to installation?
- Is the ducting clear?
- Check to make sure motor is attached to housing
- Is the 6” back draft damper on transition piece functioning properly (760 CFM hood?) Does it open when the hood is engaged?
    - If it is stuck, it will sound like motor noise but it’s really the damper
- Was a damper installed on the roof or side vent?
    - Check that the damper is fully functioning by engaging the hood and checking if it opens and closes properly
- If the motor is accessible, the motor knob can be tightened.

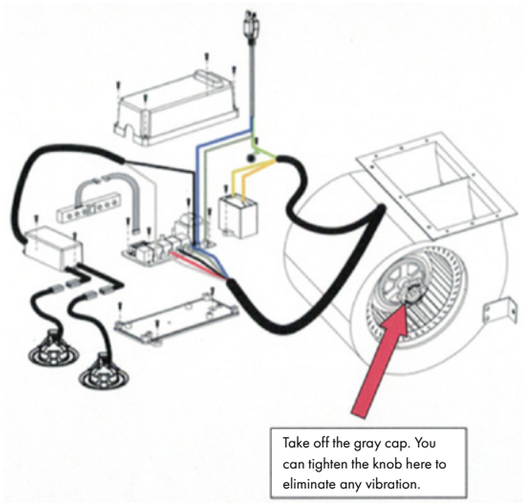

SCAN ME

Need additional information?
Scan the QR code to view the most up-to-date version of our user manual and installation guide.

1.2.1

ZLINE

ATTAINABLE **LUXURY®**

www.zlinekitchen.com
1-614-777-5004