ASSEMBLY INSTRUCTION FOR

MODEL: ADOLFO CABINET

* **REMARK:** There is a tip restraint kit provided on the back of this product please read the direction thoroughly and install immediately

HARDWARE LIST		
1	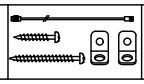	[1] Anti-tip Kit Set

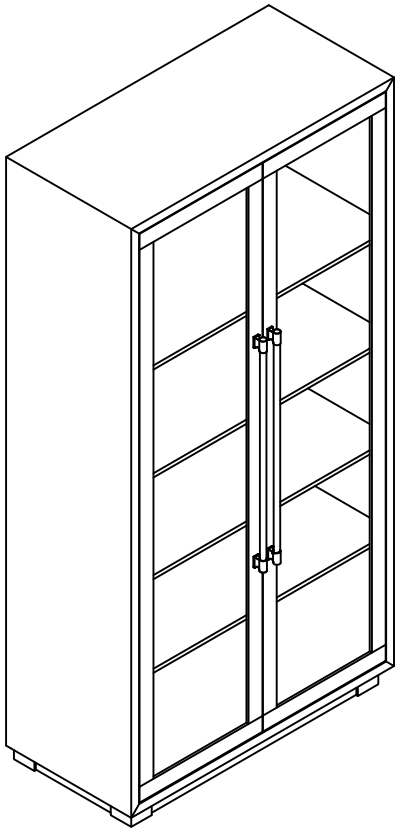

STEP: 1

ADJUST FLOOR LEVELERS

Your furniture has been expertly crafted and pre-adjusted by professionals. However, slight shifts can occur during transportation. If you notice that the doors are not perfectly aligned or the furniture wobbles, a quick adjustment can help ensure stability and a seamless look.

ADJUST FLOOR LEVELERS

Check for Stability – Place the furniture in its final position on a level surface. If it wobbles or doesn't sit evenly, the floor levelers need adjusting.

Locate the Levelers – These are small adjustable feet found at the bottom corners of your furniture.

Adjust as Needed – Using your hand or a wrench, turn the levelers clockwise to raise or counterclockwise to lower the furniture. Make small adjustments and check stability after each turn.

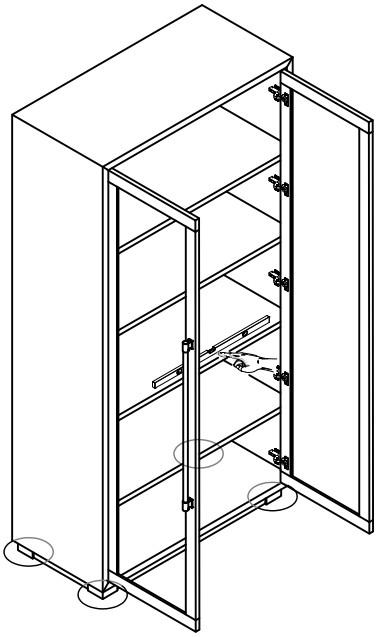

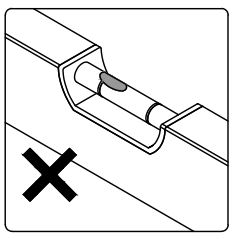

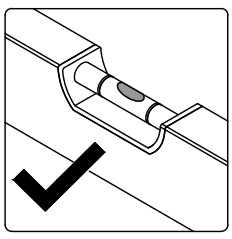

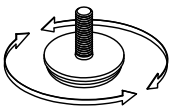

ADJUST THE LEVELERS IF NEEDED

ASSEMBLY INSTRUCTION FOR

MODEL: ALDOLFO CABINET

STEP: 2

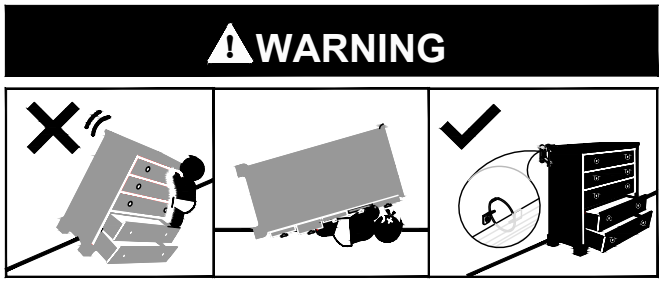

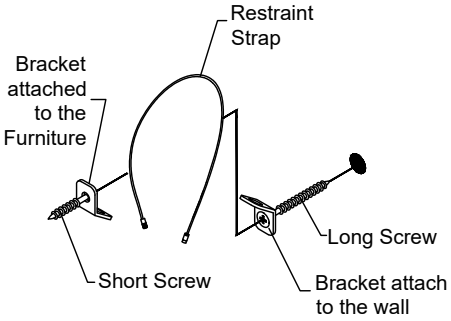

NOTE:
Refer the instructions on the anti-tip kit bag.

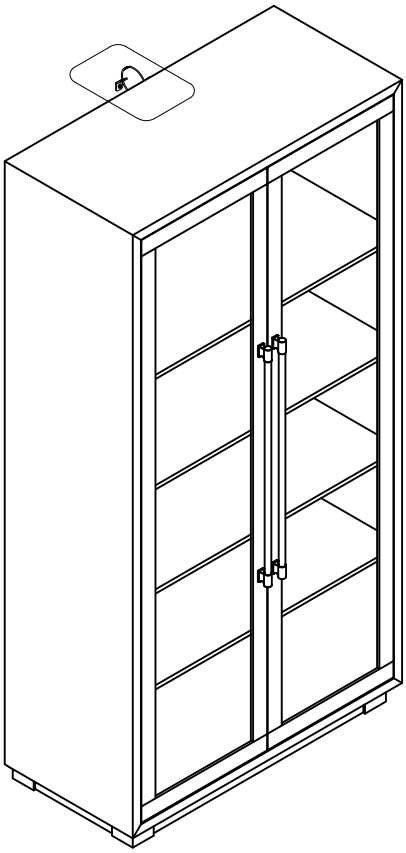

STEP: 3

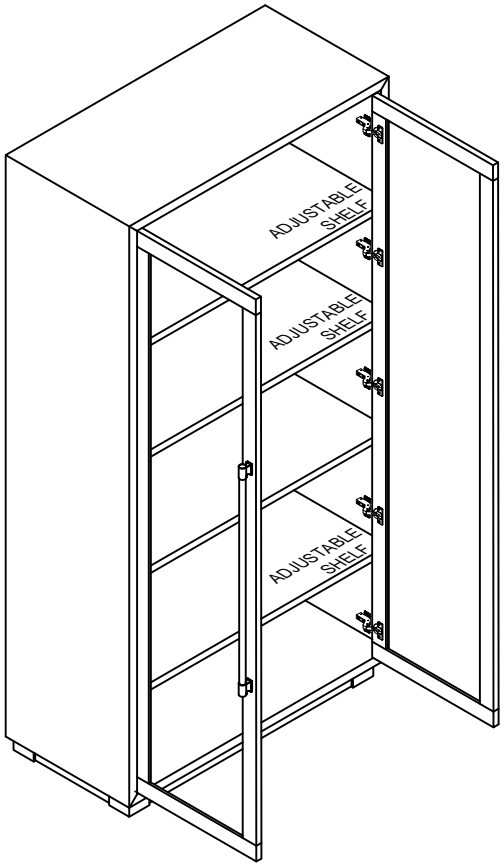

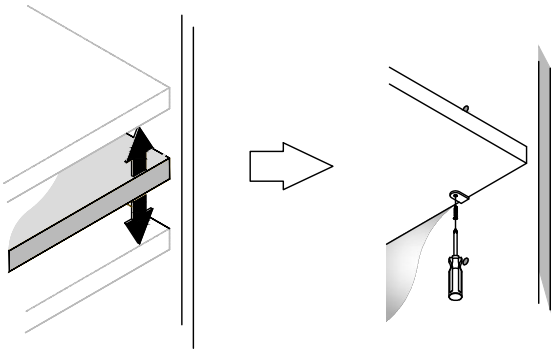

SHELF ADJUSTMENT

ASSEMBLY INSTRUCTION FOR

MODEL: ALDOLFO CABINET

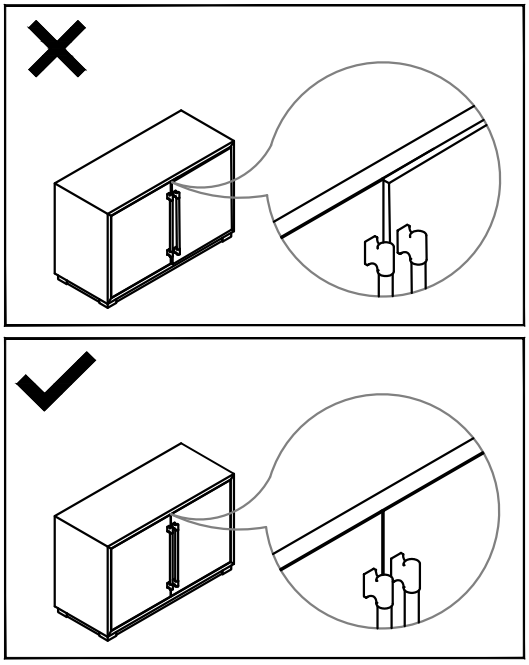

NOTE:
Avoid forcing the door closed if it does not align properly, as this may damage the door

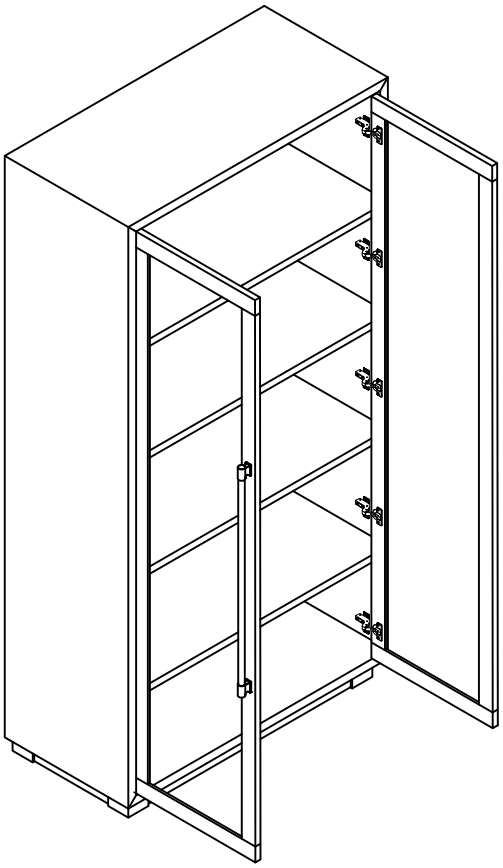

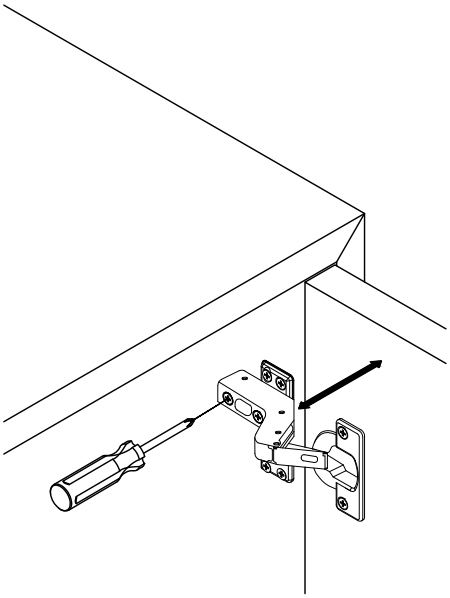

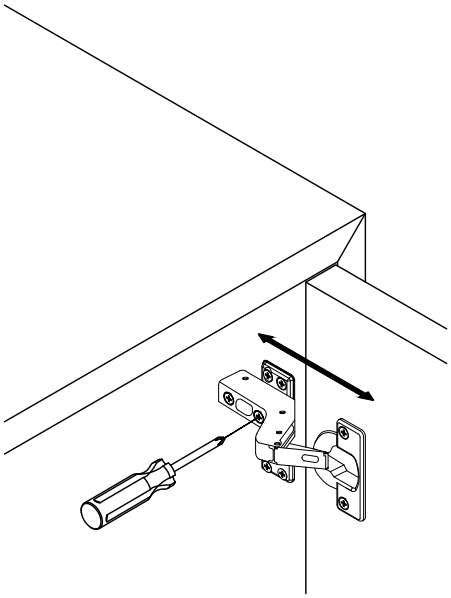

ADJUST THE HINGES IF NEEDED

NOTE:
Adjust in small steps and check your progress frequently