Bed Frames

Product ID. 7LND2

Scan for Support
support@garvee.com

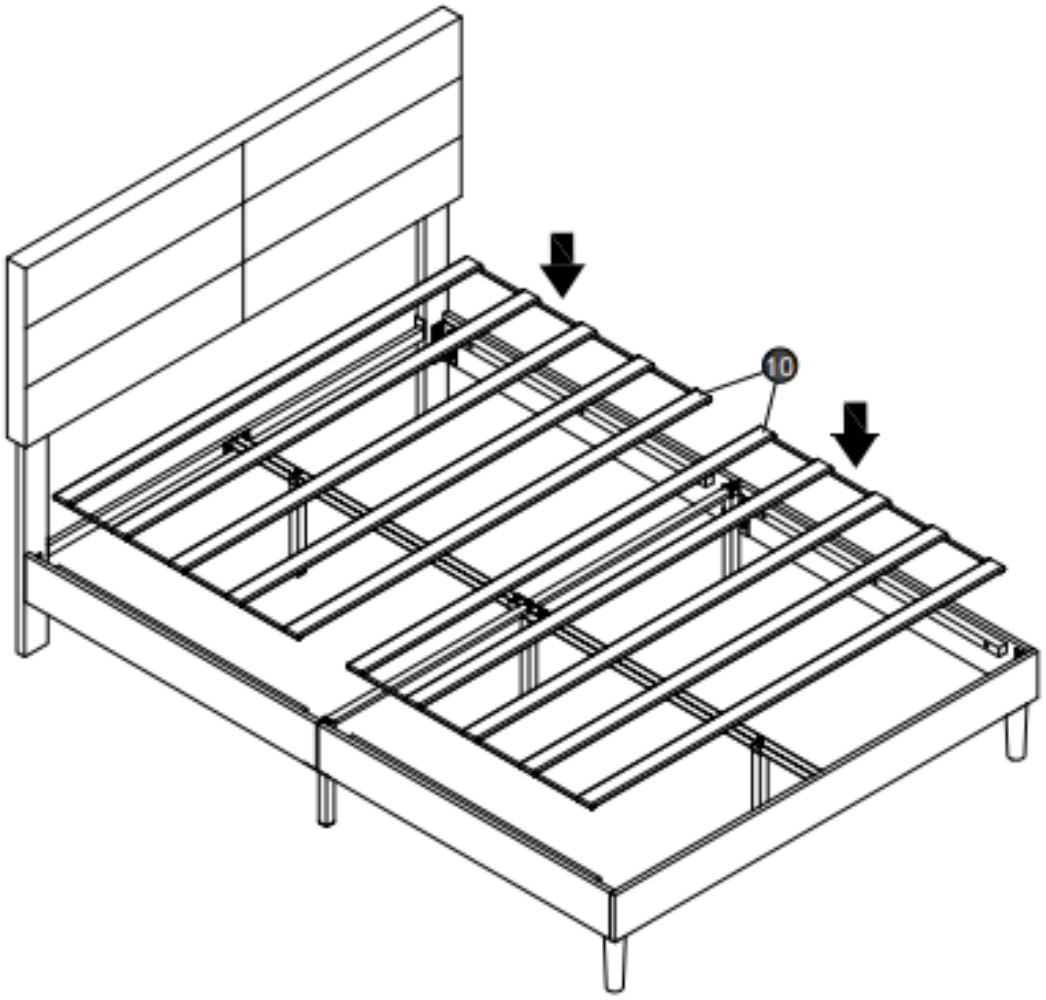

Distributed by
GARVEE.com

CONTENTS

01 PRODUCT INSTALLATION NOTES

02 PRODUCT INTROSUCTION

03 SAFETY WARNINGS

04-12 INSTALLATION

13 FAQ

Product Installation Notes

Specification

IMPORTANT SAFETY NOTICE: READ CAREFULLY BEFOREBEGINNING ASSEMBLY!

※ Always use proper tools.

※ Follow the assembly steps in order. Do not skip any steps.

※ Be sure to check all packing materials carefully for small parts may have come loose inside thecarton during shipment. If parts are missing, contact the retailer from which you purchased theproduct to obtain any missing parts. DO NOT USE SUBSTITUTE PARTS.

※ Periodically check to ensure that all connectors (bolts, screws, etc.) aretight.Keep the instructions for future reference.

※ Some assembly may involve attaching glass or mirrors. Be very careful handling the glass ormirrors, as severe injury may result if the glass or mirror breaks. Never handle large pieces ofglass or mirrors by yourself.

※ When assembling products that have electric cords (lamps, lights, etc.), always (1) make surethe electrical cord is unplugged before assembly and (2) be careful not to twist the electricalcordduring assembly.

※ When assembling shelves or entertainment centers, do not stand on lower shelves in ordertoassemble upper shelves-use a step ladder.

※ Do not stand on tables, including but not limited to, end tables, coffee tables, and dinnertables,as tables are not meant to support the weight of a person.

※ Where assembly instructions state that assembly requires two or more people, do notattempa tssembly by yourself as there is a risk of injury.

NOTE: YOUR UNIT MAY LOOK DIFFERENT IN APPEARANCE FROM THE ONE SHOWN IN THE ILLUSTRATIONS ON THIS INSTRUCTION SHEET.

PRODUCTINTRODUCTION

Specification

Product Name	Bed Frame
Model / SPU	PHK_38HW
Product Size	Quenn / Full
Weight	

Components

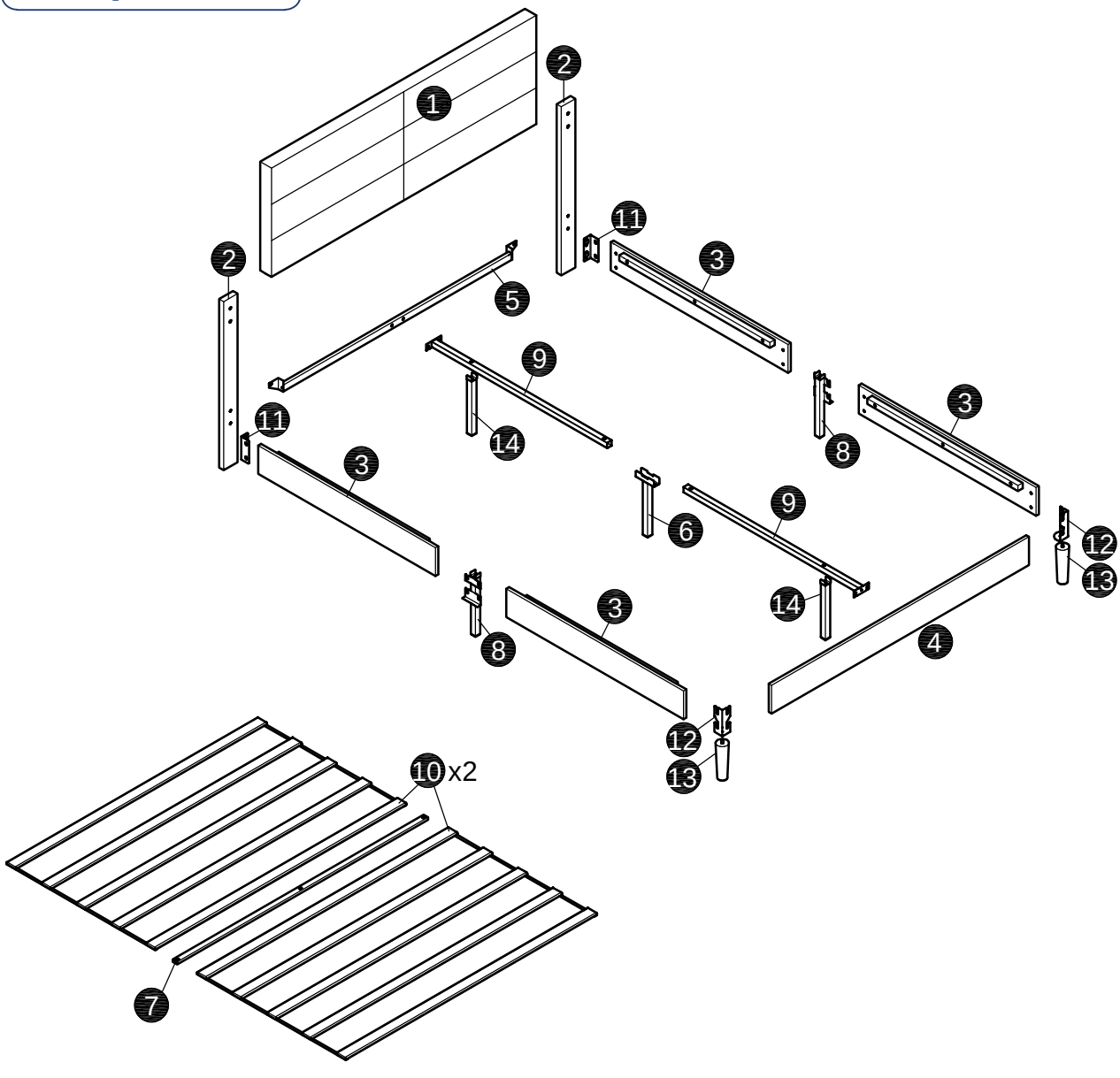

SAFETY WARNINGS

Safety Definitions

IMPORTANT SAFETY INFORMATION

Please carefully read theinstructions and caution warnings below before assembling theproduct.Following this guide will ensure that you install, use and maintainthe product properly.

※Please keep this installation and user manual/instructions for futurereference in case you need to assemble the product.
※Do not assemble if you notice serious damage such as cracks or bends.
※During installation, please use work gloves for hand safety.
※Please assemble the unit on carpeted floor or the flat cardboard box toavoid scratching the surface or your floor while assembling on the floor.
※To assemble, please use the complimentary installation tools (AllenWrench). Pay more attention to the direction of components at eachsteps.
※It is recommended that two people work together to assemble theproduct.
※Please do not tighten the screws up too much, just to 80% before youfinish to make the installation go on successfully.

RETURN POLICY

We believe you will absolutely love your new product.But for some reason you want to return your item, please contact uswithin 30 days after receiving and ensure that the product which you wantto return is in a good condition in the original box with all originalcertificates of purchase, manuals and accessories attached.

HOW TO MAINTAIN YOUR PRODUCT:

※Check the screws of the product are not loose from regular use.
※Do not use sharp instruments, rubbing alcohol, corrosive chemicals, orabrasive cleaners to clean the product.
※Do not keep the product in a damp environment for a long period of time. The damp environment may cause the iron components to rust and theplates to bulge and crack.

INSTALLATION

Parts List

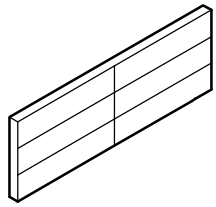		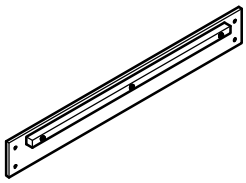
① *1	② *2	③ *4
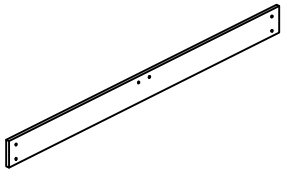	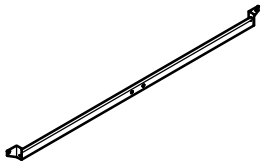	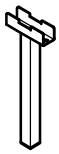
④ *1	⑤ *1	⑥ *1
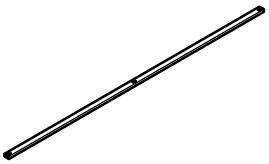		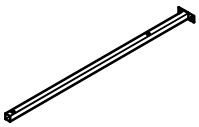
⑦ *1	⑧ *2	⑨ *2
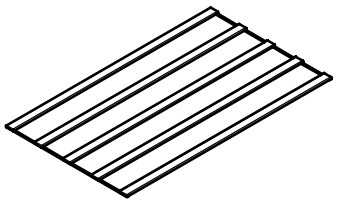	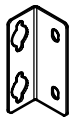	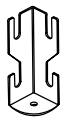
⑩ *2	⑪ *2	⑫ *2
		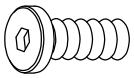
⑬ *2	⑭ *2	A : M8*18mm *30
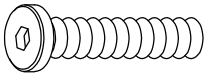	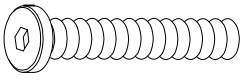	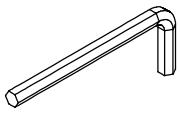
B : M8*35mm *6	C : M8*45mm *5	D : M5 *2

Step 1

C	M8x45	4PCS

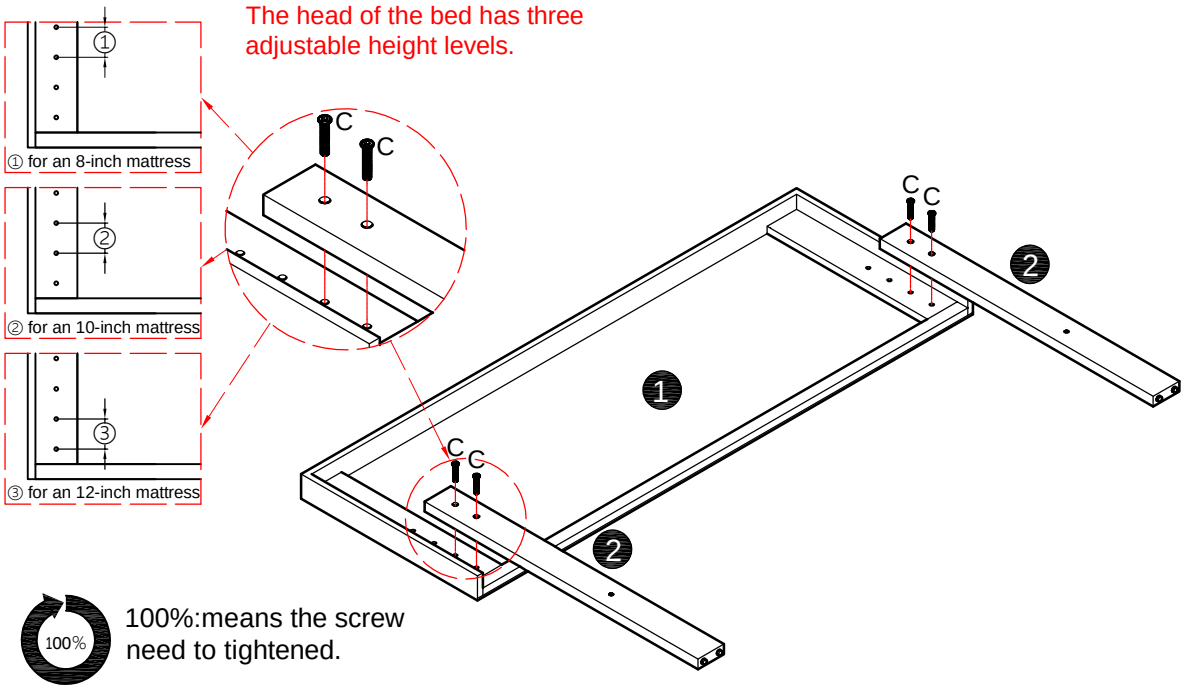

100%:means the screw need to tightened.

Step 2

A	M8x18	2PCS

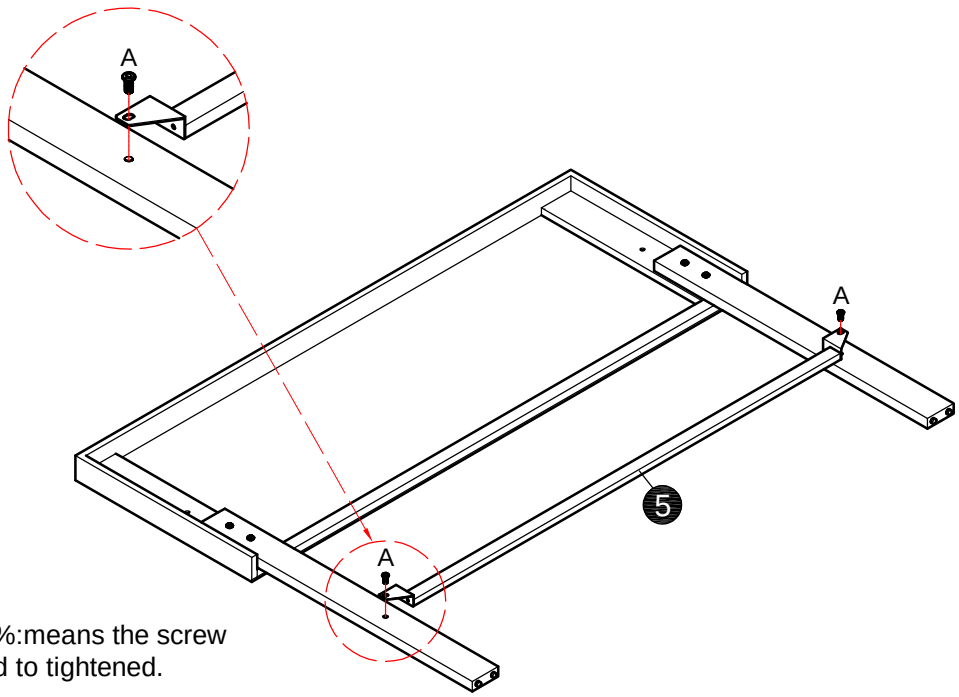

100%:means the screw need to tightened.

Step 3

A	M8x18	6PCS

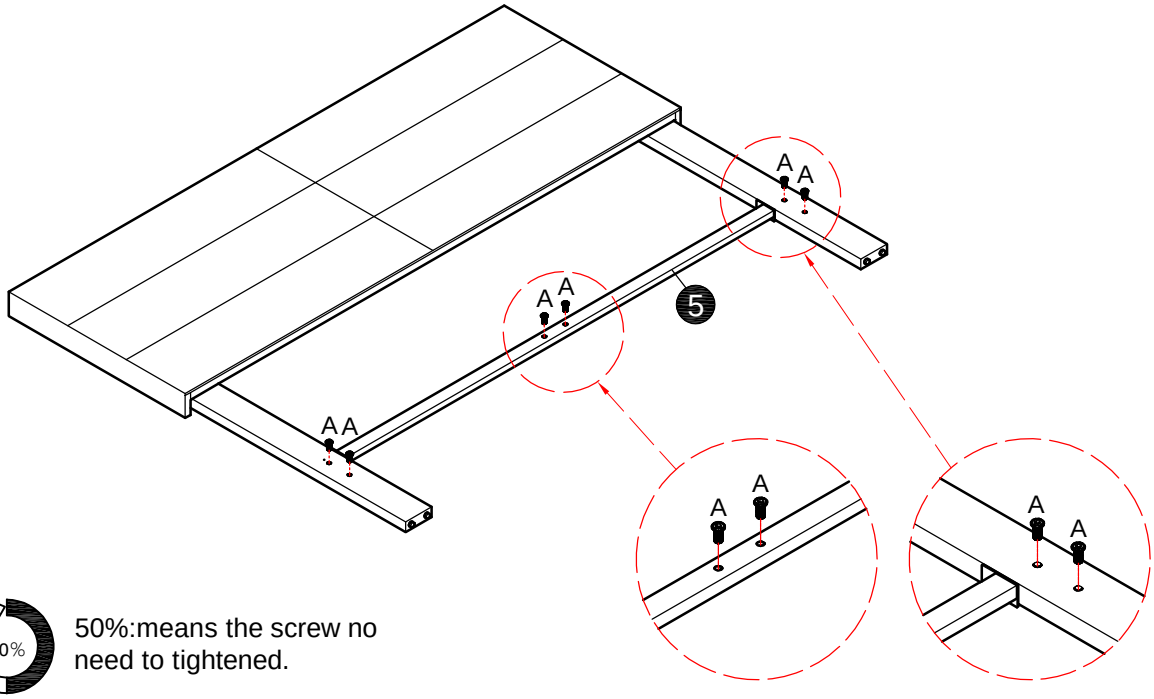

50%:means the screw no need to tightened.

Step 4

A	M8x18	6PCS

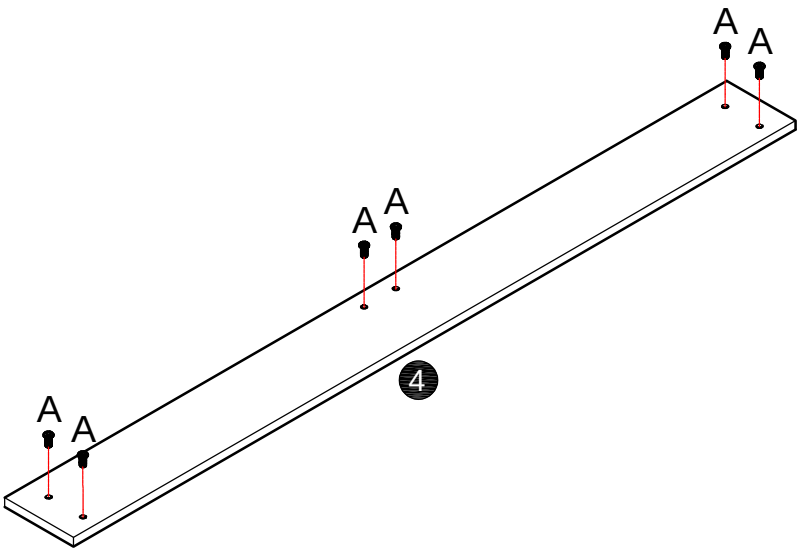

50%:means the screw no need to tightened.

Step 5

A	M8x18	16PCS

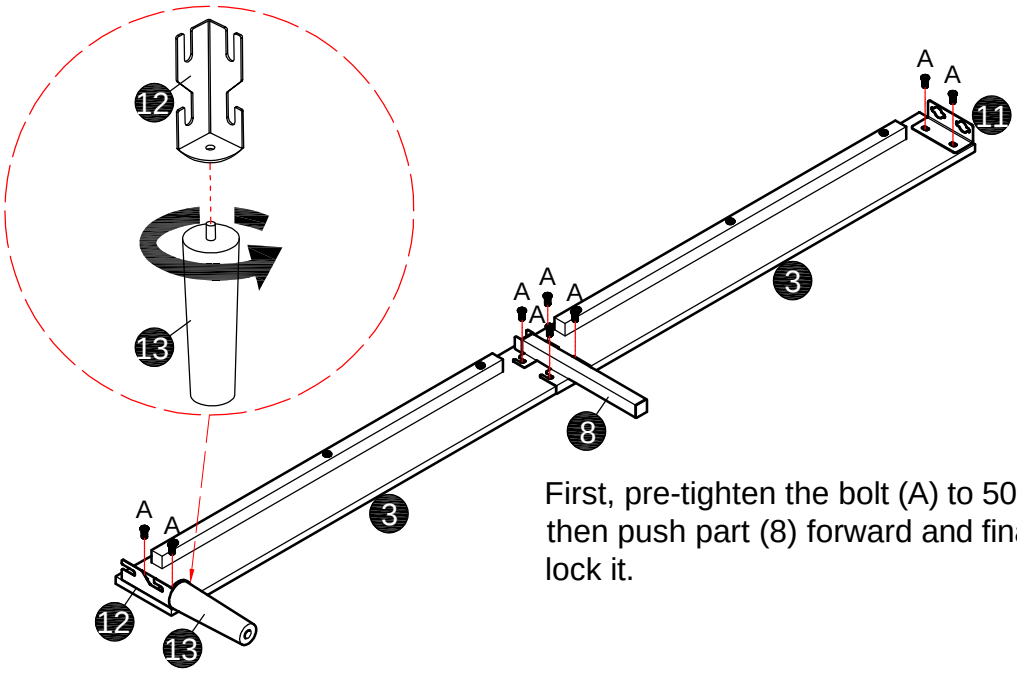

First, pre-tighten the bolt (A) to 50%, then push part (8) forward and finally lock it.

x2

100%:means the screw need to tightened.

Step 6

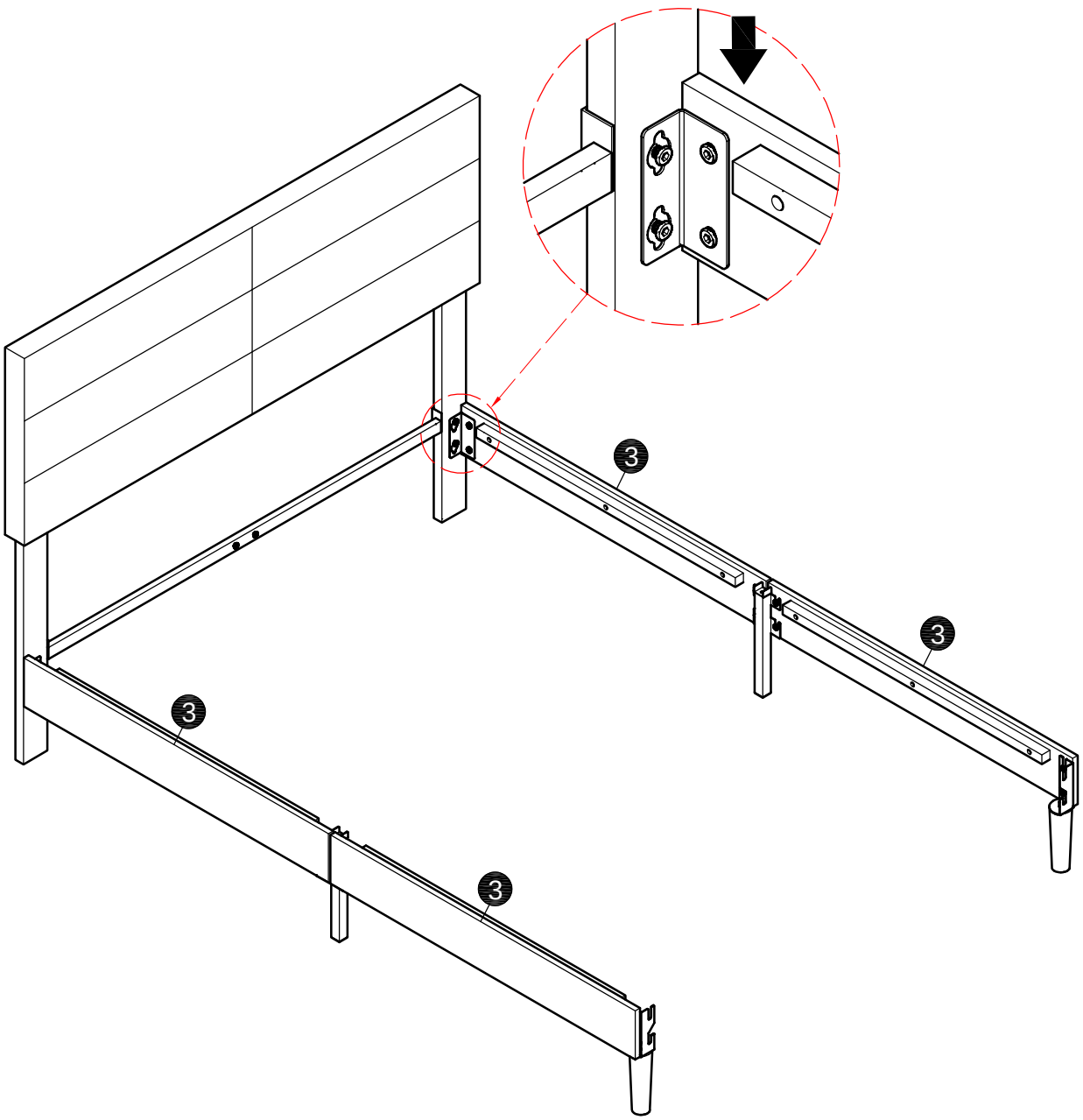

Step 7

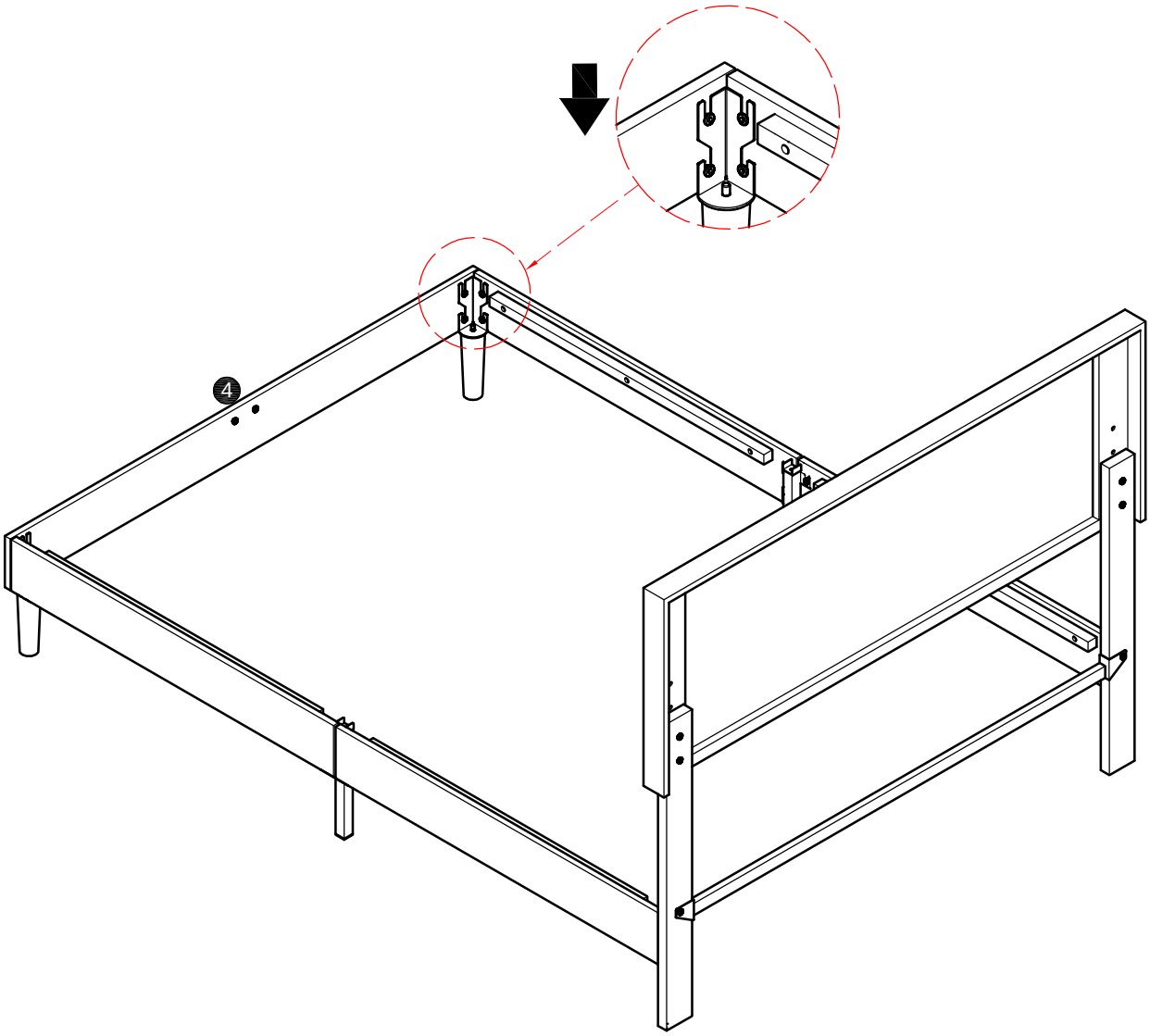

Step 8

B	M8x35	2PCS
C	M8x45	1PC

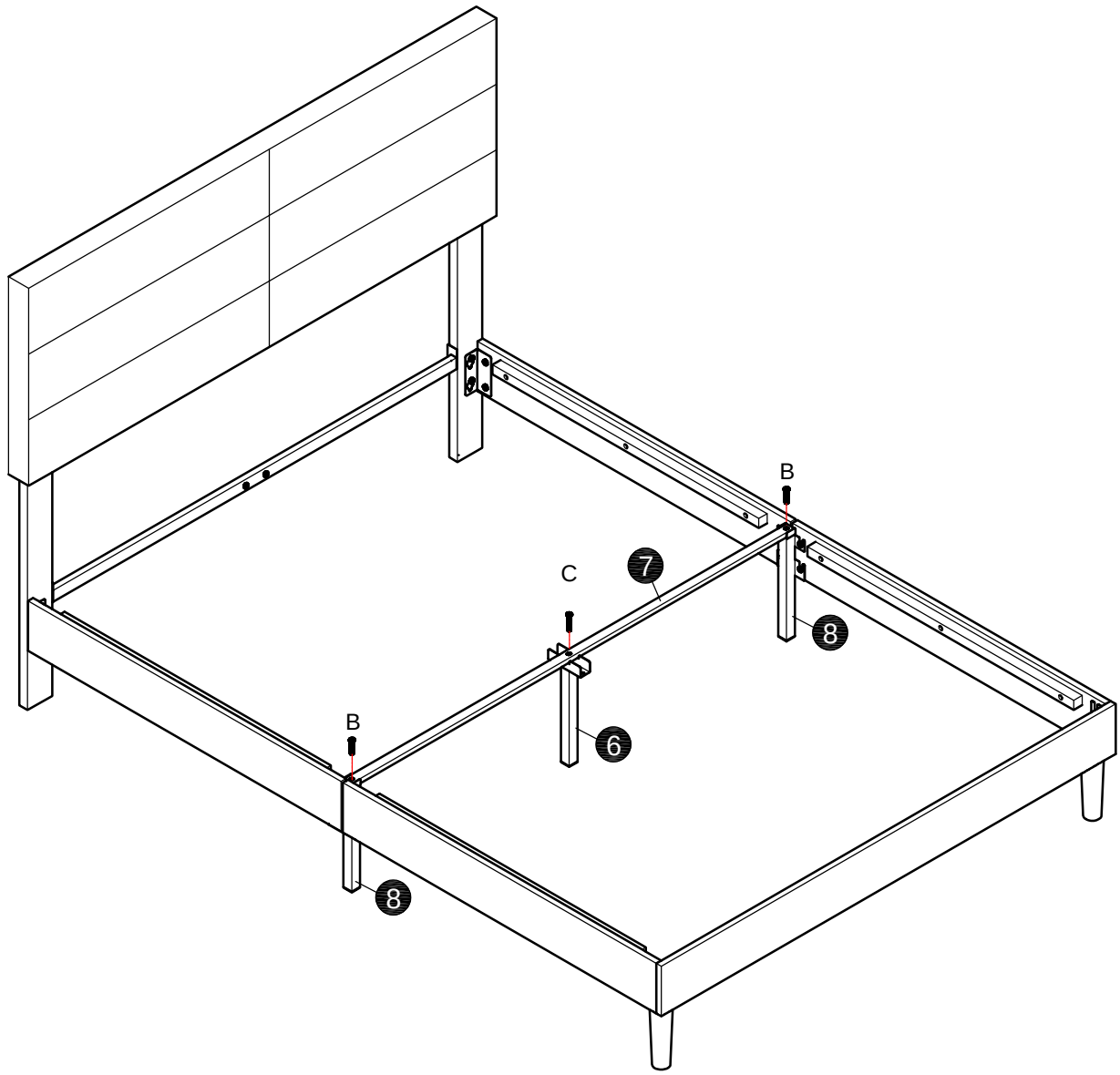

Step 9

B	M8x35	4PCS

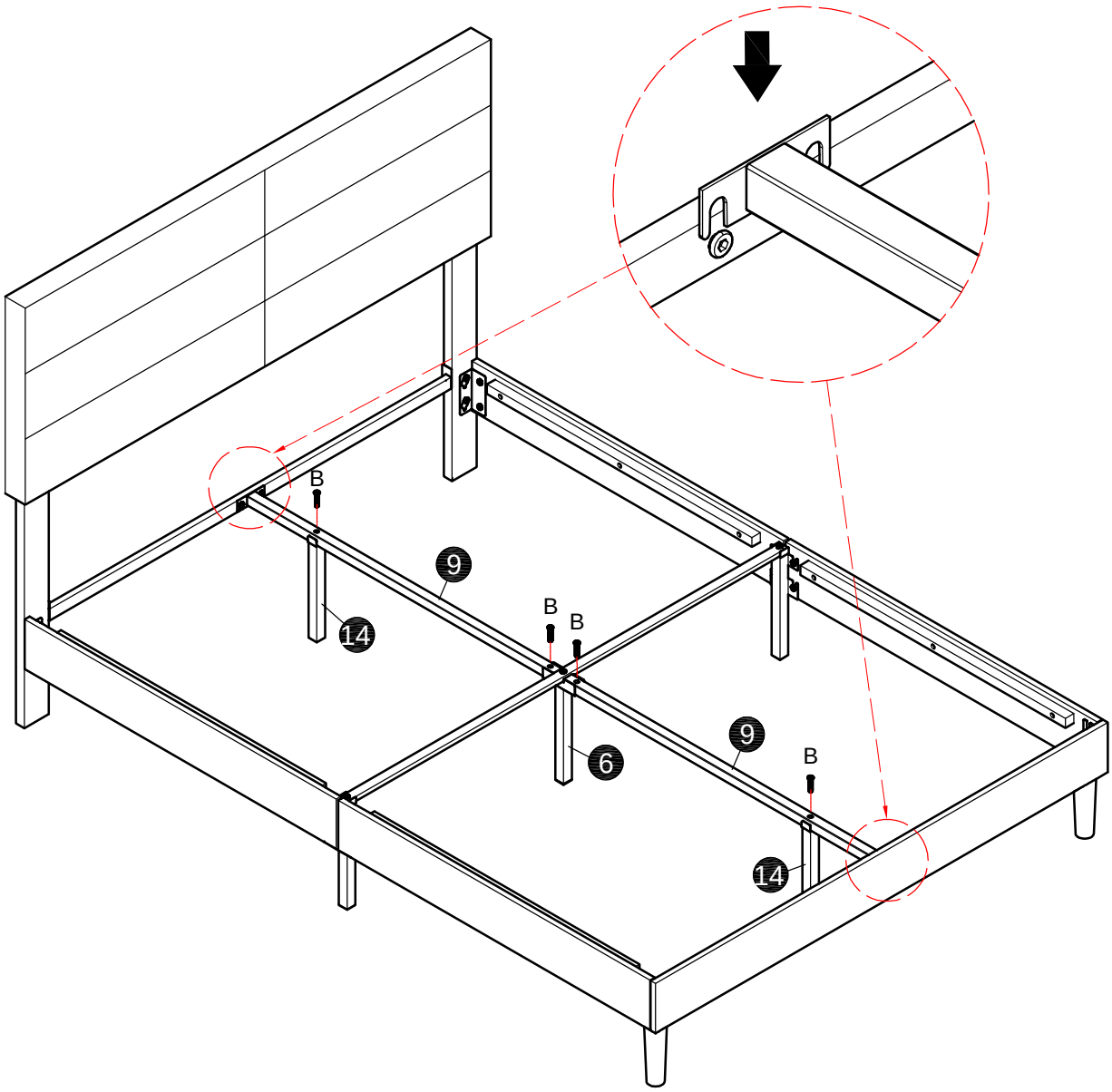

Tighten all screws securely

Step 10

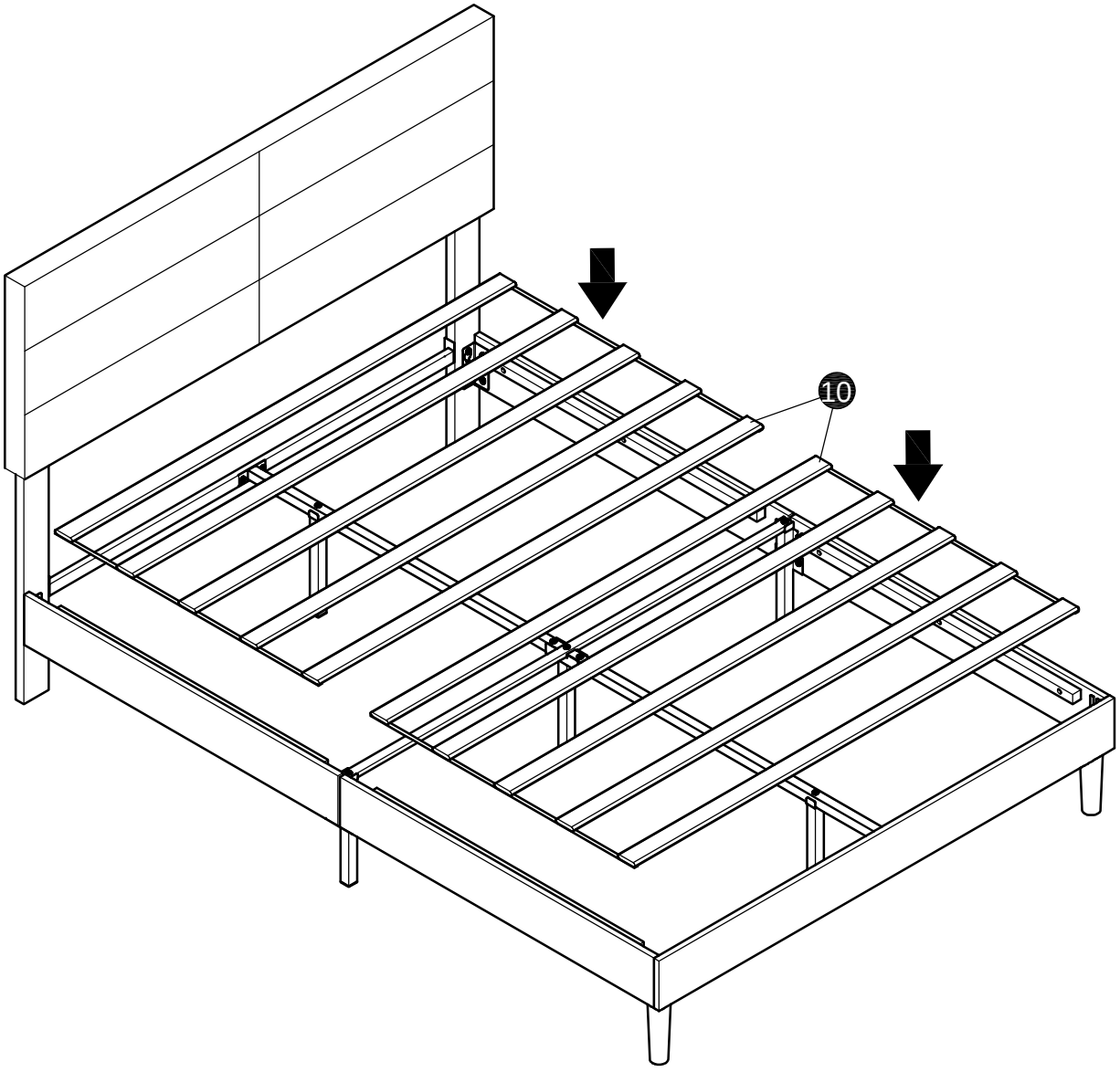

FAQ

Q How to find us?

A Customer Service **Email: support@garvee.com**

Q When you encounter problems while using the product:

A **Trouble shooting**

Missing / Wrong / Broken parts and installation issues

↓

Send email with your question, pic and order NO. to support@garvee.com

↓

Respond within 24 hours

↓

Issue resolved

Limited Liability & Warning

No Unauthorized Modifications/Repairs: Do not modify or attempt to repair this product unless you are an authorized technician. Unauthorized actions may create hazards and void all warranties

Misuse & Non-Compliance: We are not liable for any injury, damage, or loss resulting from:

(a) misuse, abuse, neglect, or improper installation;

(b) failure to follow instructions or safety precautions;

(c) use of unauthorized parts/accessories;

(d) unauthorized modifications/repairs;

(e) accidents, natural disasters, or external causes.

If you doubt any step of installation or operation, stop using the product and contact authorized service or the customer support.

LIMITACIÓN DE RESPONSABILIDAD Y ADVERTENCIA

Modificaciones o Reparaciones No Autorizadas: NO modifique ni intente reparar este producto a menos que sea un técnico autorizado. Las acciones no autorizadas pueden generar riesgos y anularán todas las garantías.

Uso Indebido e Incumplimiento: No asumimos responsabilidad alguna por lesiones, daños o pérdidas que resulten de:

(a) uso indebido, abuso, negligencia o instalación incorrecta;

(b) incumplimiento de las instrucciones o precauciones de seguridad;

(c) uso de piezas o accesorios no autorizados;

(d) modificaciones o reparaciones no autorizadas;

(e) accidentes, desastres naturales o causas externas.

Si tiene dudas sobre algún paso de la instalación o el funcionamiento, deje de usar el producto y póngase en contacto con el servicio técnico autorizado o con atención al cliente.

GARVEE

support@garvee.com