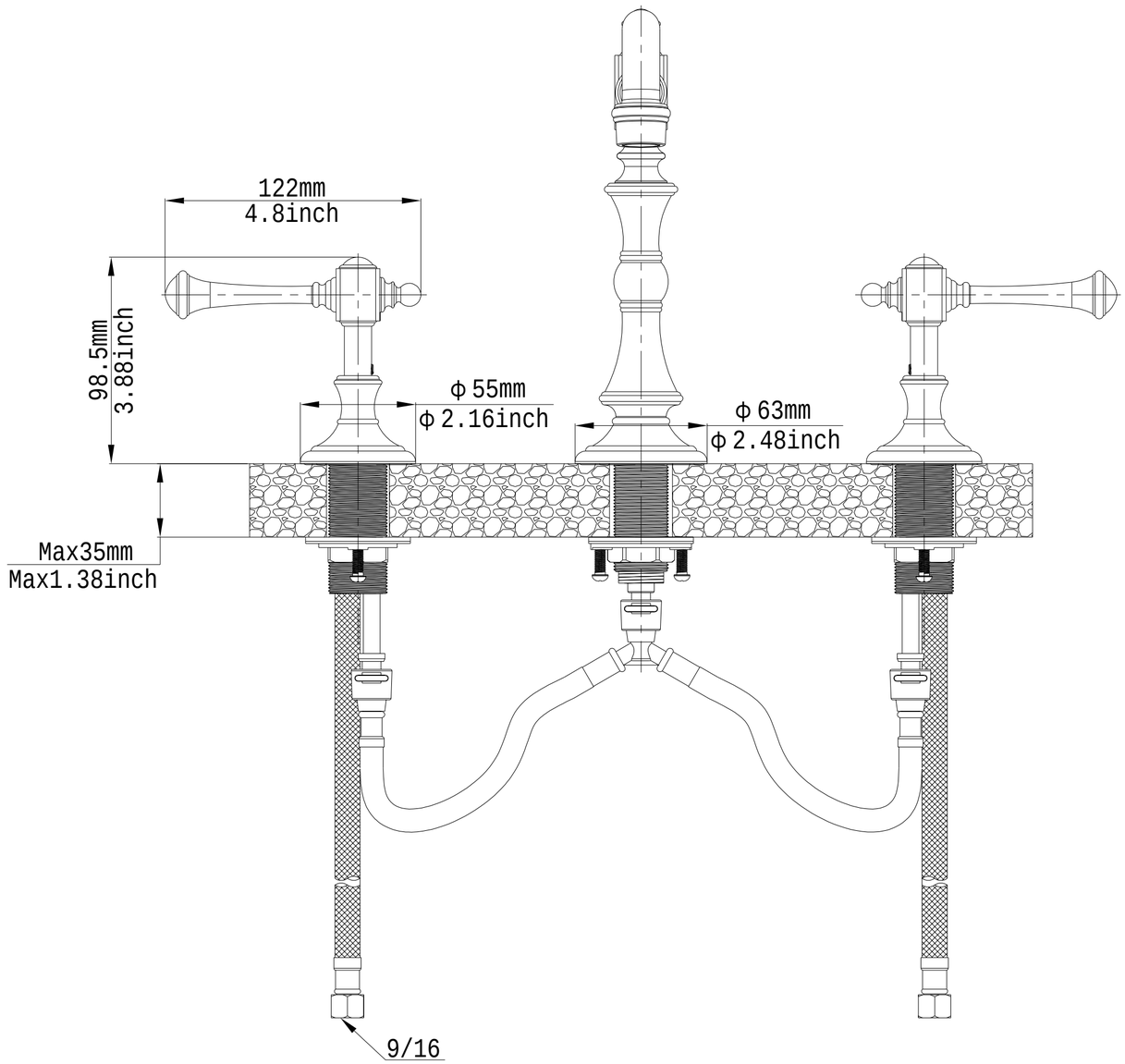
122mm
4.8inch
98.5mm
3.88inch
ϕ 55mm
ϕ 2.16inch
ϕ 63mm
ϕ 2.48inch
Max35mm
Max1.38inch
9/16

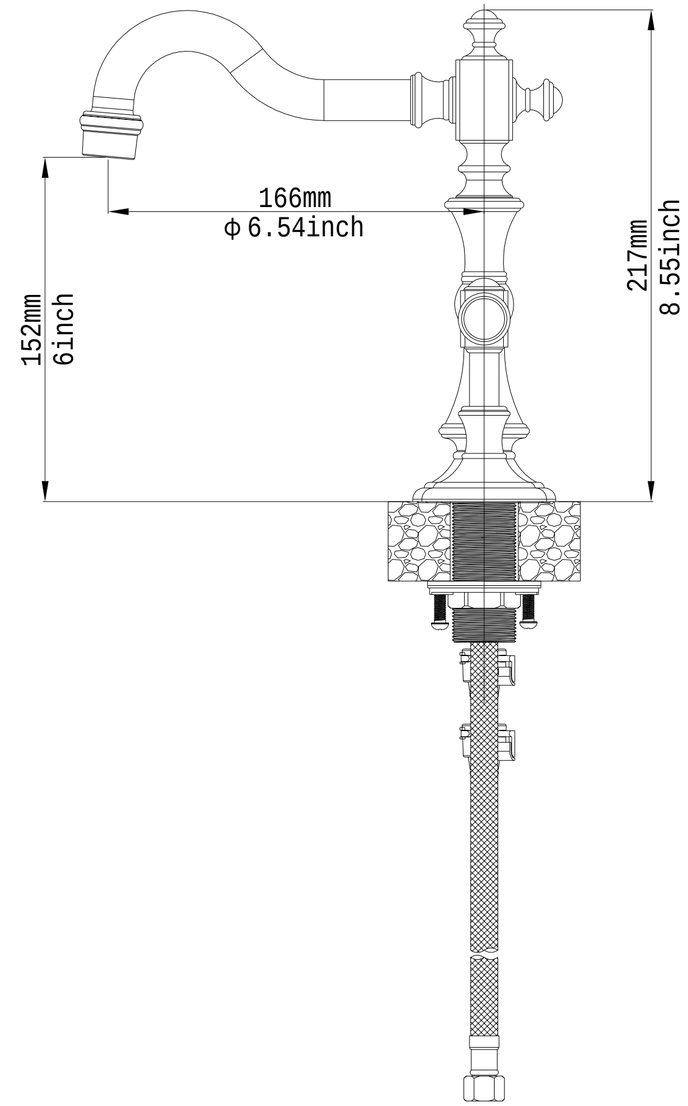
166mm
ϕ 6.54inch
152mm
6inch
217mm
8.55inch

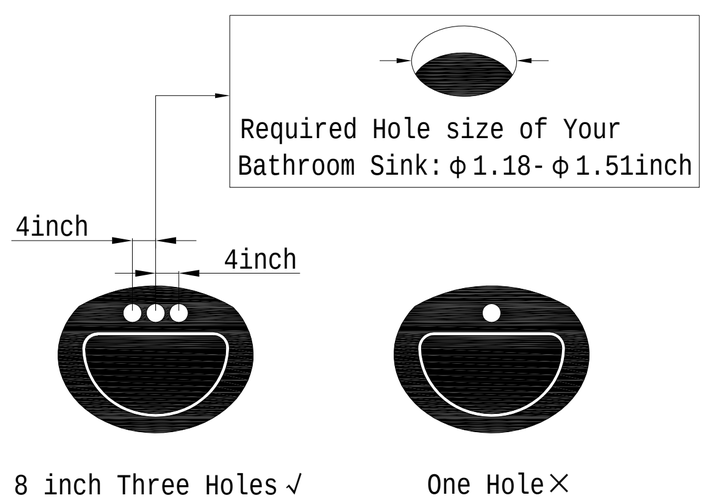
Required Hole size of Your
Bathroom Sink: ϕ 1.18- ϕ 1.51inch
4inch
4inch
8 inch Three Holes √
One Hole ×

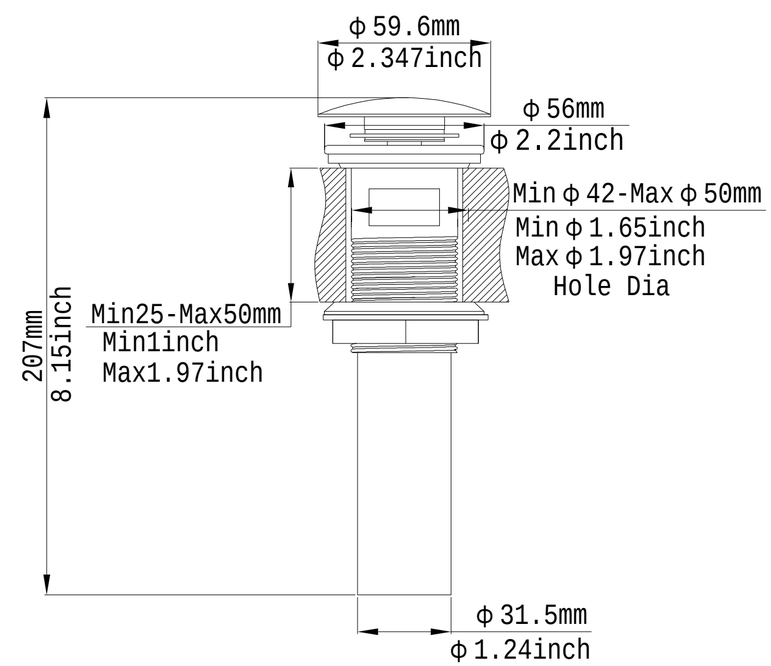
ϕ 59.6mm
ϕ 2.347inch
ϕ 56mm
ϕ 2.2inch
Min ϕ 42-Max ϕ 50mm
Min ϕ 1.65inch
Max ϕ 1.97inch
Hole Dia
Min25-Max50mm
Min1inch
Max1.97inch
207mm
8.15inch
ϕ 31.5mm
ϕ 1.24inch