Kräus®

INSTALLATION MANUAL

CleanMate™ Waterfall Deckplate

WFDP-06

Congratulations on the purchase of your new Kraus® plumbing fixture!

Please keep the box and packaging materials until your product is completely installed. If you have any questions, require technical assistance or have any problems with your product:



DO NOT RETURN TO STORE

Please contact our Customer Service Team
1-800-775-0703 / customerservice@kraususa.com

Have the model number available and retain a copy of your receipt with purchase date for reference.

If for any reason this product does not meet your expectations, please be sure to repack this product in the original box and packaging material to avoid damage during transit.



Prior to Installation:

- Make sure you have all necessary parts by checking the diagram and parts list. If any part is missing or damaged, please contact Kraus© Customer Service at 800-775-0703 for a replacement.
- Read all instructions and safety warnings and ensure you have all tools, parts, and equipment necessary for a safe installation.
- Turn off the hot and cold water supply at the angle stops and turn on the old faucet to release any built up pressure. Remove existing faucet.
- Pre-drilled hole size requirement: 1 3/8" (min)
- Max countertop thickness: 3 1/2”

For technical assistance or replacement parts, please contact Kraus Customer Service and one of our representatives will be happy to help:
Toll-Free: 800-775-0703 or Customerservice@kraususa.com

Tools Required

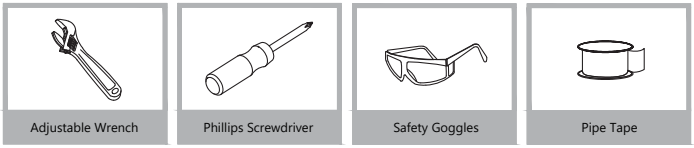

Care & Maintenance



* To keep the product clean & shining, follow the steps below:

1. Rinse with clean water & dry with a soft cloth
2. Do not clean with soaps, acid, polish, abrasives or harsh cleaners
3. Do not use cloth with a coarse surface
4. Unscrew the aerator and clean when necessary

* This installation manual is subject to change without further notice.

Diagram and Parts List

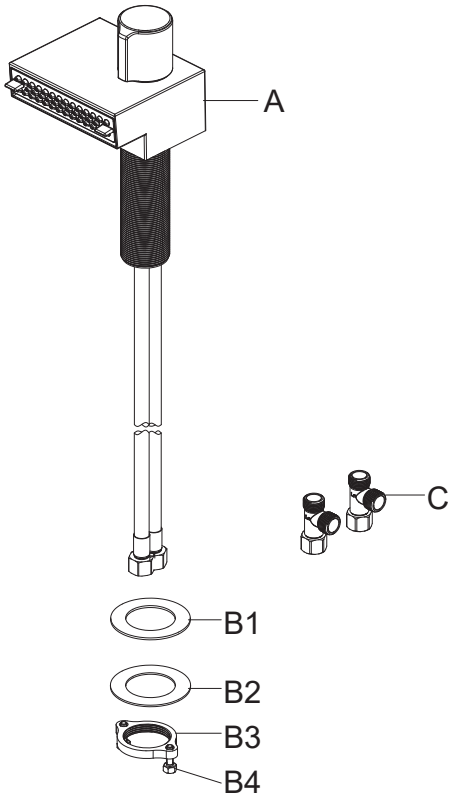

A. Faucet Body
B. Mounting Hardware
   B1. Rubber Washer
   B2. Metal Washer
   B3. Mounting Nut
   B4. Mounting Screws
C. Tee Connector

Faucet Dimensions

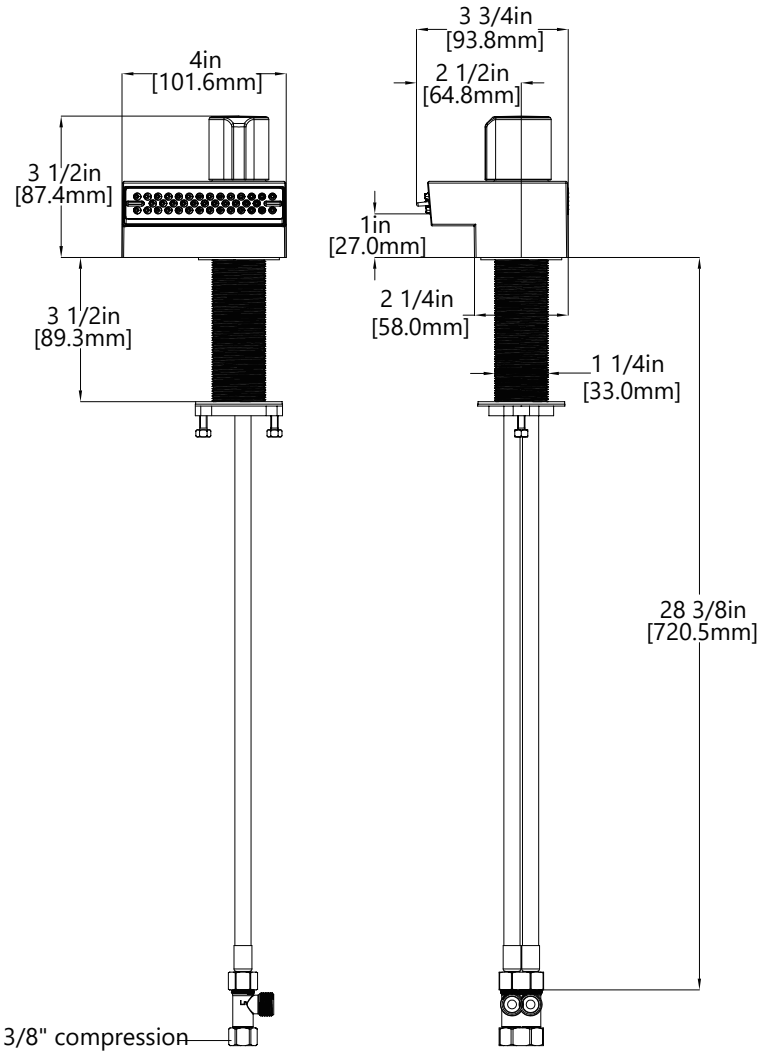

Installer Tip:

Shut off main water supply before installing new faucet.

Step 1. Remove mounting hardware

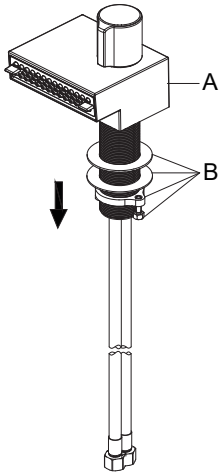

Shut off the water supply. Remove the old product. Clean the mounting surface. Remove mounting hardware (B) from faucet body (A).

Step 2. Installing the faucet assembly

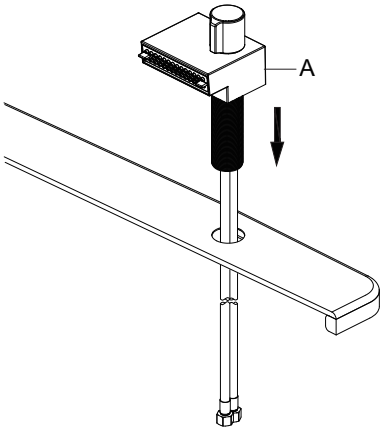

Insert faucet body (A) through the hole in the sink or countertop.

Step 3. Securing the faucet assembly

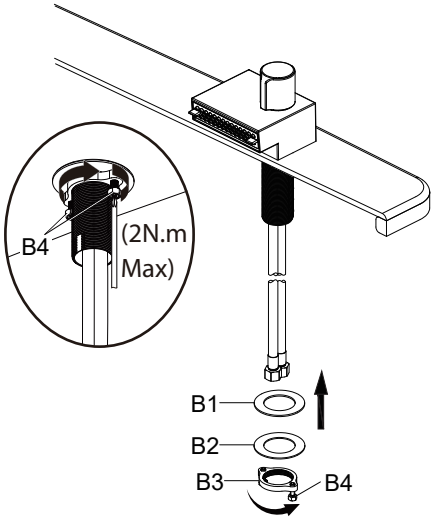

Install the rubber washer (B1) and metal washer (B2) onto the threaded mounting shank. Thread the nut (B3) onto the mounting shank. Lock the nut (B3) into position by tightening the screws (B4). Do not overtighten.

Step 4. Making the waterline connections (without tee connector)

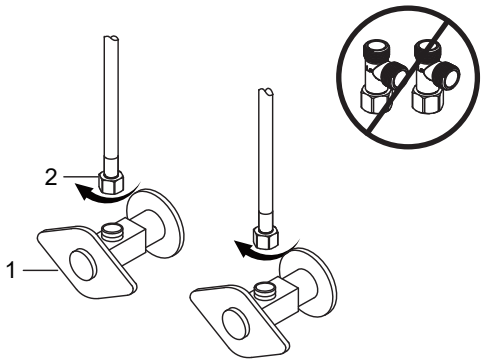

NOTE: This step is for no tee connector installation (optional). If the tee connector will be used, make the waterline connections as described in step 5.

Thread the nut (2) on the supply line onto the outlet of the water supply valve (1) and tighten with wrench. Do not overtighten.

NOTE: Please make sure filter washers are installed before connecting to the main valve.

Step 5. Making the waterline connections (with tee connector)

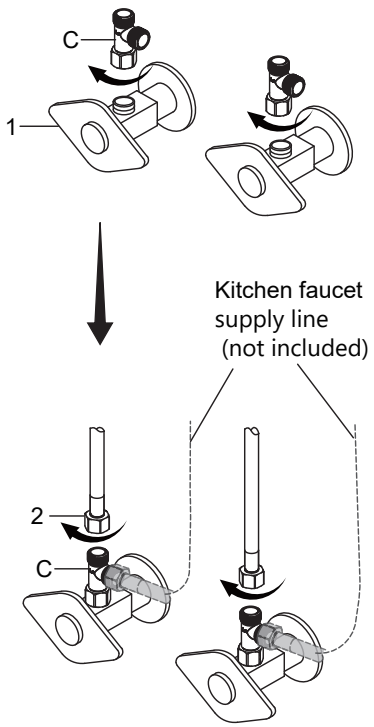

NOTE: This step is for tee connector installation (optional). If the tee connector will not be used, make the waterline connections as described in step 4.

Thread the tee connector (C) onto the outlet of the water supply valve (1) and tighten with wrench. Do not overtighten. Thread the nut (2) on the supply line onto the tee connector (C) and tighten with wrench. Do not overtighten.

NOTE: Please make sure filter washers are installed before connecting to the main valve.

Step 6. Flushing and checking for leaks

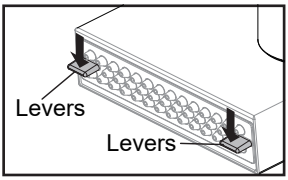

NOTE: Adjust the water flow angle by pressing the levers. Avoid touching the outlet panel directly, as contact may dent the self-cleaning nozzles. If water flow becomes uneven after contact, gently reposition the nozzles to restore normal spray.

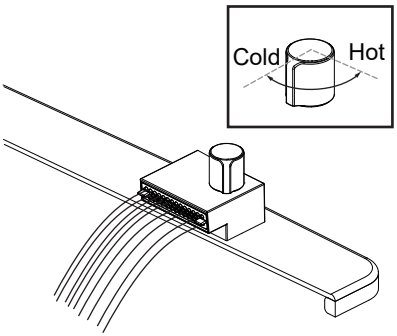

After installation is completed, turn on the hot and cold water supplies. Check for leaks. Turn the faucet to the warm position where it mixes hot and cold water. Flush the water lines for one minute. Check for leaks. Re-tighten any connections if necessary, but do not overtighten.

Replacement Parts

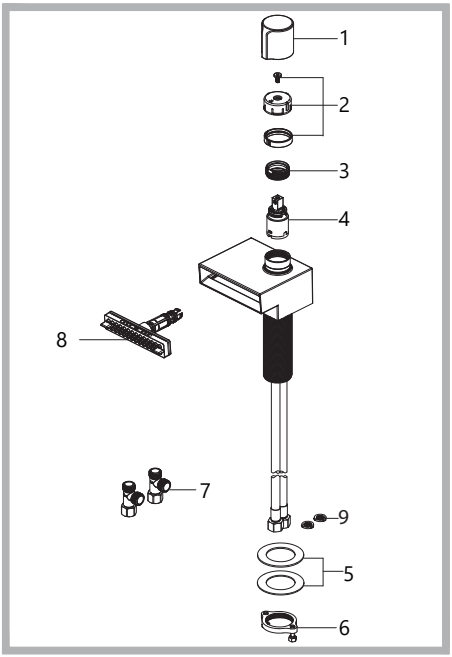

Replacement Parts List	Finish/Color	Part #
1. Handle	SFS, SFBB, MB**	KP27618
2. Screw & Inverter & Washer		KP27622
3. Bonnet nut		KP27621
4. Cartridge		KP27619
5. Washer		KP27028
6. Mounting nut & screw		KP27079
7. Tee Connector		KP27620
8. Spray face	BL, GR**	KP27623
9. Filter Washer		KP27167

**Denotes faucet component color options:
SFS - Spot Free Stainless Steel
SFBB - Spot Free Brushed Brass
MB - Matte Black
SFBBMB - Spot Free Brushed Brass/Matte Black
BL - Black
GR- Grey

Troubleshooting

If you have followed the instructions carefully and your faucet still does not work properly, take the following corrective steps:

PROBLEM	CAUSE	ACTION
Leakage under faucet handle.	Bonnet nut (3) has come loose	Remove the handle (1). Loosen the screw with phillips screwdriver. Remove the inverter and washer. Tighten bonnet nut (3) with an adjustable wrench.
There are leaks from the hose underneath the deck.	The hose connections may be loose.	Check and tighten all hose connections.
There is no water or reduced flow of water.	The water hot or cold inlet hose was kinked during installation and is limiting the water flow.	Turn off the water supply and disconnect the hose from the stop valve. Loop the hose in a smooth way to avoid a kink in the hose, reconnect to the stop valve.
	The screen filters in the hose connectors are dirty.	Turn off the water supply at the water valves and unscrew the hose connectors from the water supply lines. Clean the screens in the water lines with hot water, removing any debris or calcium build up.
The spray has reduced water flow or irregular flow pattern.	The cartridge (4) may be clogged.	Remove the cartridge (4) and clean accordingly. If it cannot be cleaned, replace the cartridge.
	The the self-cleaning nozzles on the spray face (8) is dent.	Gently reposition the nozzles to restore normal spray face (8).
	The spray face (8) is clogged or dirty.	Remove the spray face (8) and clean accordingly. If it cannot be cleaned, replace the spray.

Remove the spray:

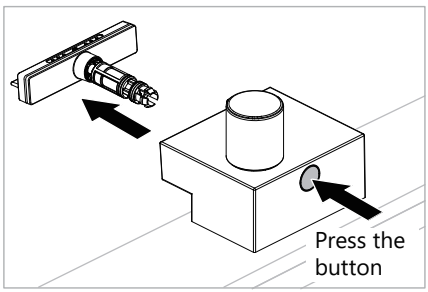

Reinstall the spray:

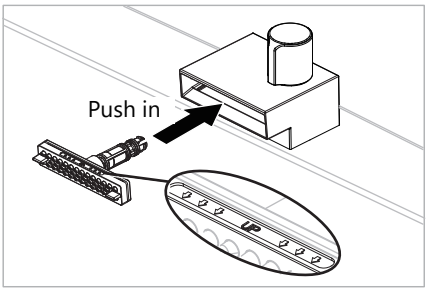

Codes/Standards Applicable:

NSF/ANSI 372 NSF/ANSI/CAN 61: Q ≤ 1 LEAD FREE



NSF/ANSI 61

ASME A112.18.1
1.8GPM 6.8L/min maximum

Faucet - Lifetime Limited Warranty

Kraus® USA Plumbing, LLC ("Kraus") extends this warranty to the original purchaser for personal household use of the Faucet when purchased from an authorized Kraus dealer and in the location of original installation. This warranty is non-transferable.

Kraus warrants the structure and finish of the Faucet to be free from defects in material and workmanship under normal usage for as long as the original purchaser resides in the residence in which the Faucet was first installed.

Kraus warrants the Faucet's sprayhead assembly (including the engine, aerators, structure, restrictors, back flow preventers, sprayer hoses, braided supply line hoses which encompasses nylon, silicon and stainless steel) of the product to be free from defects in material and workmanship under normal usage for a period of one (1) year from the date of purchase.

Kraus warrants the Faucet's cartridge to be free from defects in material and workmanship under normal usage for a period of five (5) years from the date of purchase.

Any product reported to the authorized dealer or to Kraus as being defective within the warranty period will be repaired or replaced with a product of equal value at the option of Kraus.

Commercial Warranty

Kraus USA Plumbing, LLC ("Kraus") warrants its Products for a period of one (1) year to commercial purchasers of Products used in industrial, commercial and business applications.

Care and Cleaning Instructions

Certain cleaning products may cause damage to a Product's finish and use of the following on the Product will void this warranty:

- Abrasive cleaners such as powders, bleach, ammonia, alcohol or chorine
- Abrasive pads, steel wool or wire brushes

What is Not Covered

This warranty does not cover Products that were discontinued when purchased or display Products, whether such Products were purchased at discount outlets, unauthorized dealers, and/or sold on clearance. This warranty does not cover any free gifts included with purchase.

This warranty does not cover damage resulting from neglect, misuse (including use for an unintended application), abuse, carelessness, accident, hard water or mineral deposits, exposure to corrosive materials, improper maintenance, alteration of the Product, or failure to follow care, cleaning or installation instructions enclosed with your Product. Kraus recommends that all Kraus Products be installed by a fully licensed and insured trade professional with experience in the installation of bathroom and/or kitchen manufactured goods.

How to Make a Warranty Claim

If you are a **consumer purchaser**, please contact a Kraus® Customer Service Representative at:
Kraus USA Plumbing, LLC
55 E. 111th Street
Indianapolis, IN 46280
Toll-free 800-775-0703
Customerservice@kraususa.com

If you are a **plumbing contractor or trade professional**, please contact a Kraus Pro Representative at:
Kraus USA Plumbing, LLC
55 E. 111th Street
Indianapolis, IN 46280
516-801-8955
Proservice@kraususa.com

If you are an **authorized partner**, please contact a Partner Support Representative at:
Kraus USA Plumbing, LLC
55 E. 111th Street
Indianapolis, IN 46280
516-801-8954
Partnersupport@kraususa.com

In requesting warranty service, please be ready to provide your proof of purchase and a description of the problem. Shipping charges will be covered for the first (1) year of the warranted replacement part or product (HI, AK, and Puerto Rico shipping charges may apply). International shipping fees are not included.

Limitation on Duration of Implied Warranties

Please note that some states/provinces (including Quebec) do not allow limitations on how long an implied warranty lasts, so the below limitations may not apply to you. TO THE MAXIMUM EXTENT PERMITTED BY APPLICABLE LAW, ANY IMPLIED WARRANTY, INCLUDING THE IMPLIED WARRANTIES OF MERCHANTABILITY AND OF FITNESS FOR A PARTICULAR PURPOSE, IS LIMITED TO THE STATUTORY PERIOD OR THE DURATION OF THIS WARRANTY, WHICHEVER IS SHORTER.

Limitation of Special, Incidental or Consequential Damages

Please note that some states/provinces (including Quebec) do not allow the exclusion or limitation of special, incidental or consequential damages, so the below limitations and exclusions may not apply to you. TO THE MAXIMUM EXTENT PERMITTED BY APPLICABLE LAW, THIS WARRANTY DOES NOT COVER, AND KRAUS USA PLUMBING, LLC SHALL NOT BE LIABLE FOR, ANY SPECIAL, INCIDENTAL OR CONSEQUENTIAL DAMAGES (INCLUDING LABOR CHARGES TO REPAIR, REPLACE, INSTALL OR REMOVE THIS PRODUCT), WHETHER ARISING OUT OF BREACH OF ANY EXPRESS OR IMPLIED WARRANTY, BREACH OF CONTRACT, TORT, OR OTHERWISE.

This warranty gives you specific legal rights, and you may also have other rights which vary from state/province to state/province.

Download the Kraus Care & Maintenance Guide at:
http://www.kraususa.com/maintenance

IMPORTANT

Register Your Kraus Product

Activate Your Warranty

Access Premium Customer Support

Get Product Information

REGISTER TODAY

http://www.kraususa.com/registration

Kräus®

www.kraususa.com