Assembly Instructions

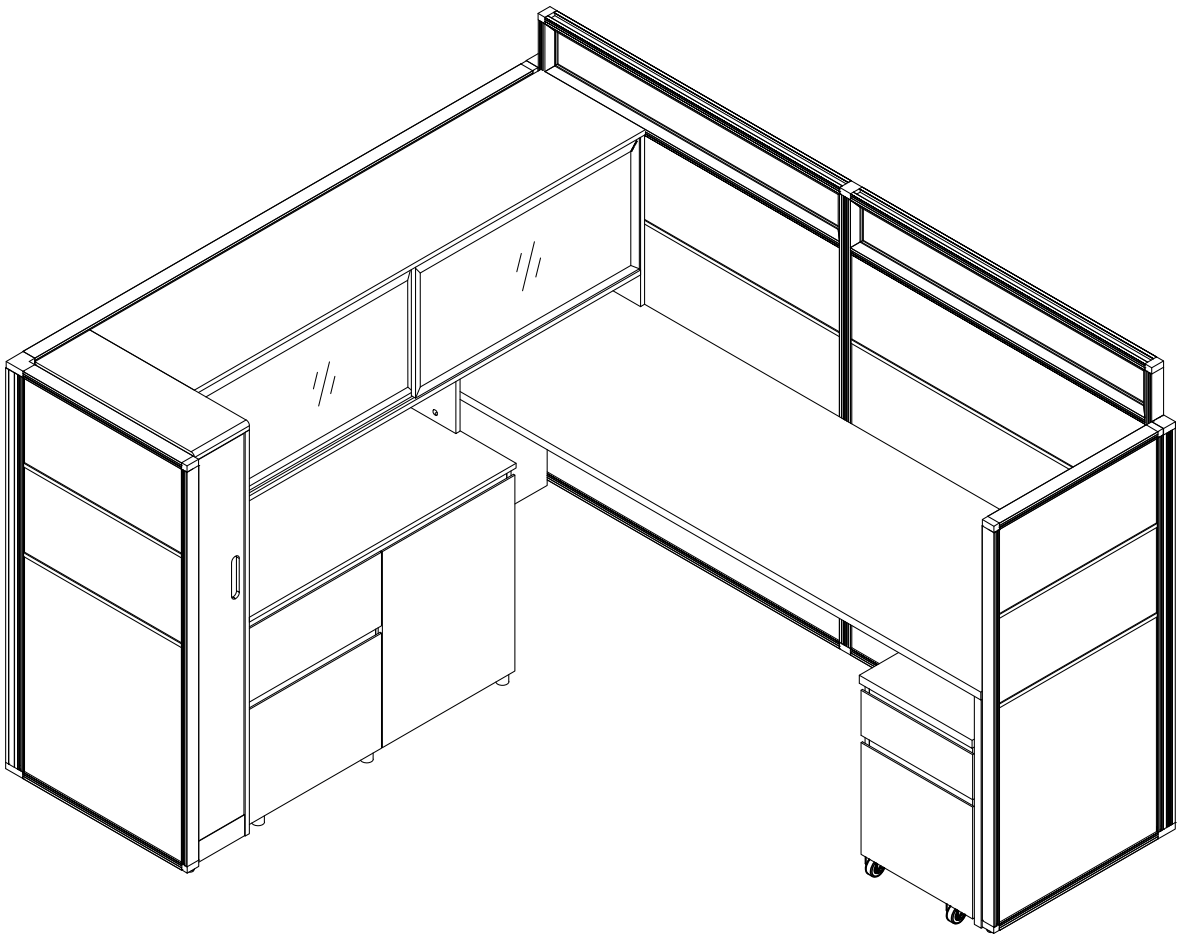

Office partition

Model No.
BGZ-GK019-01

step1

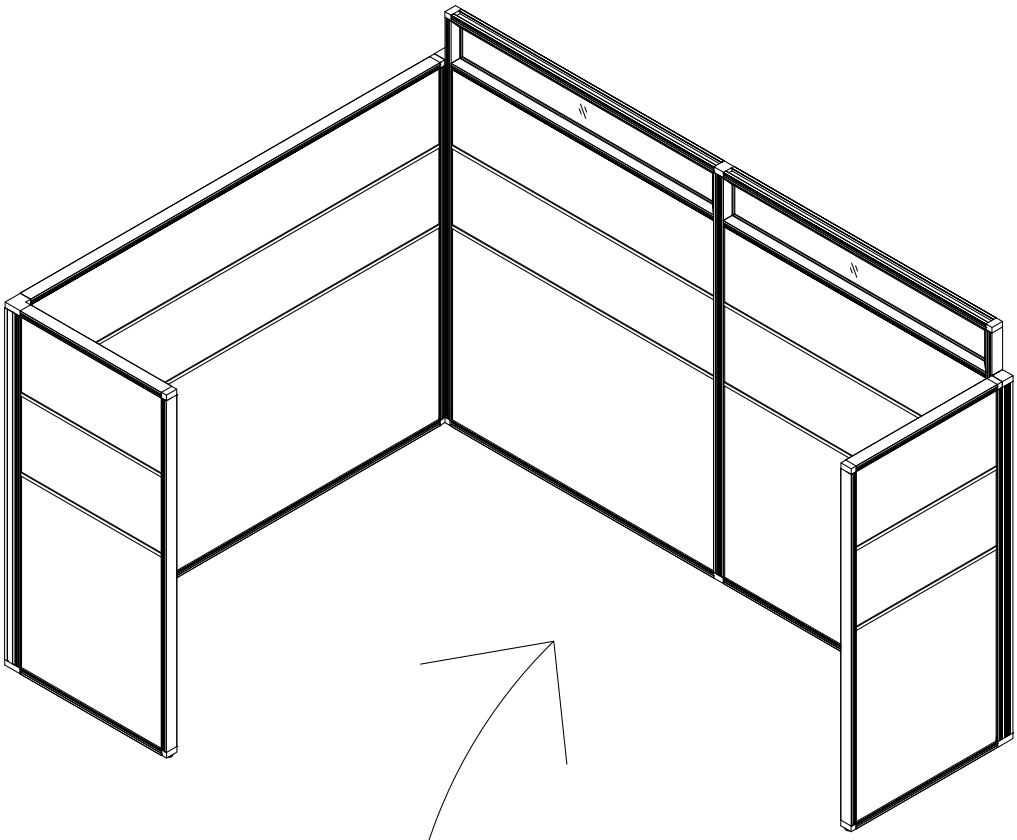

step2

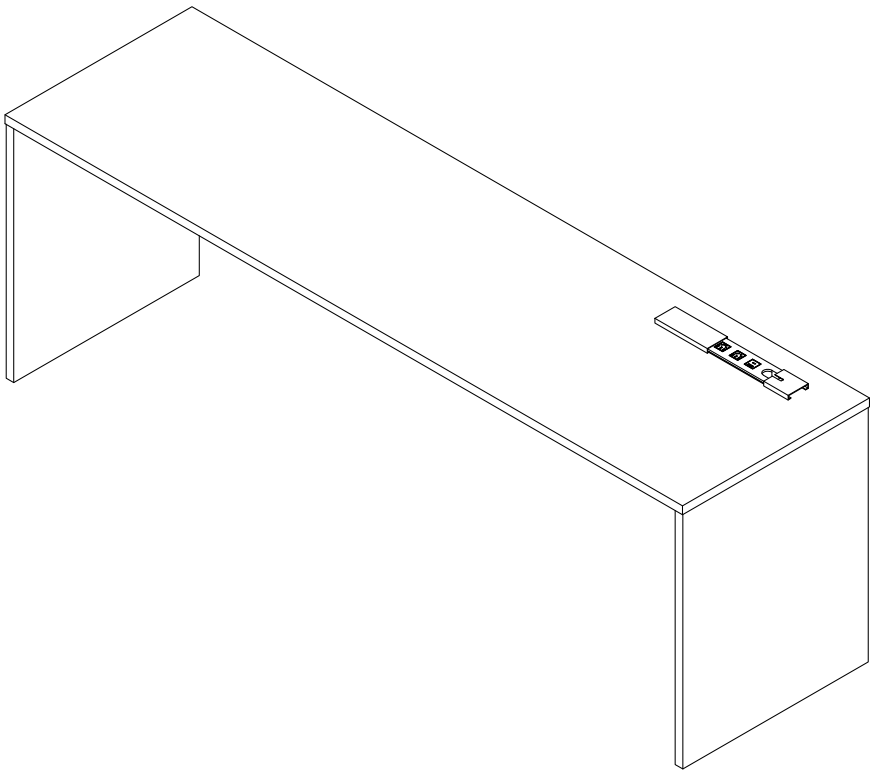

step3

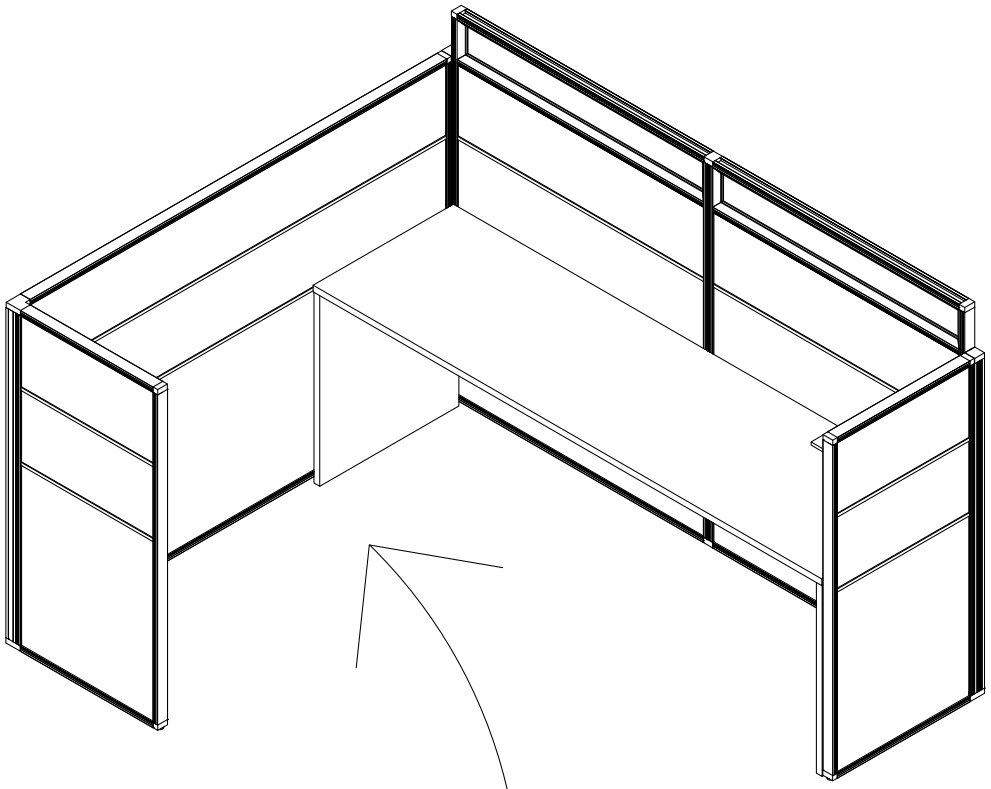

step4

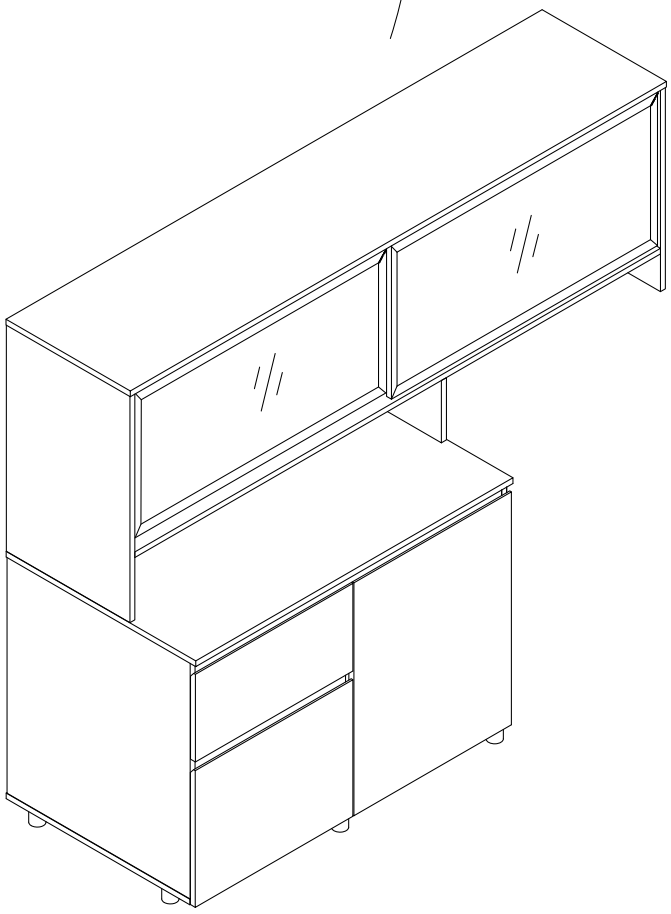

step5

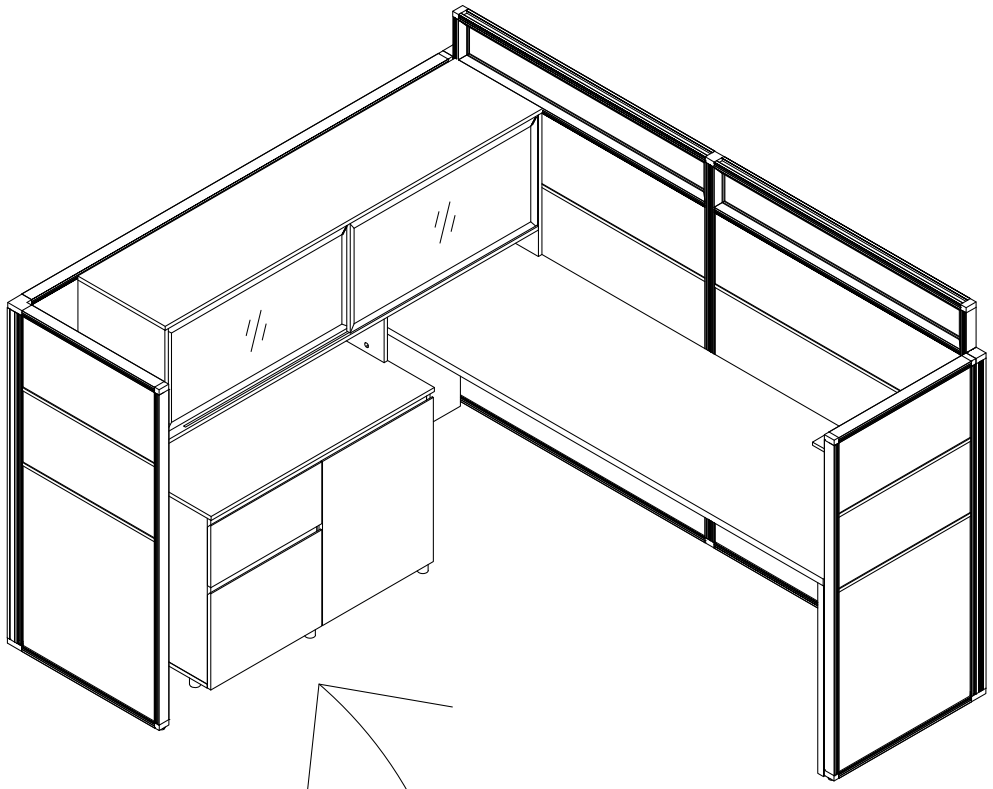

step6

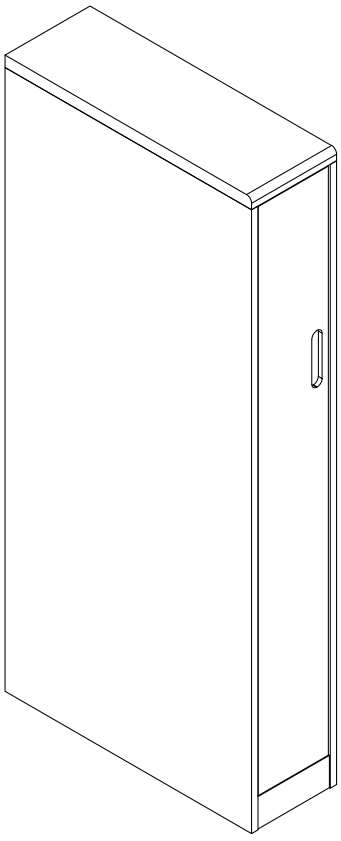

step7

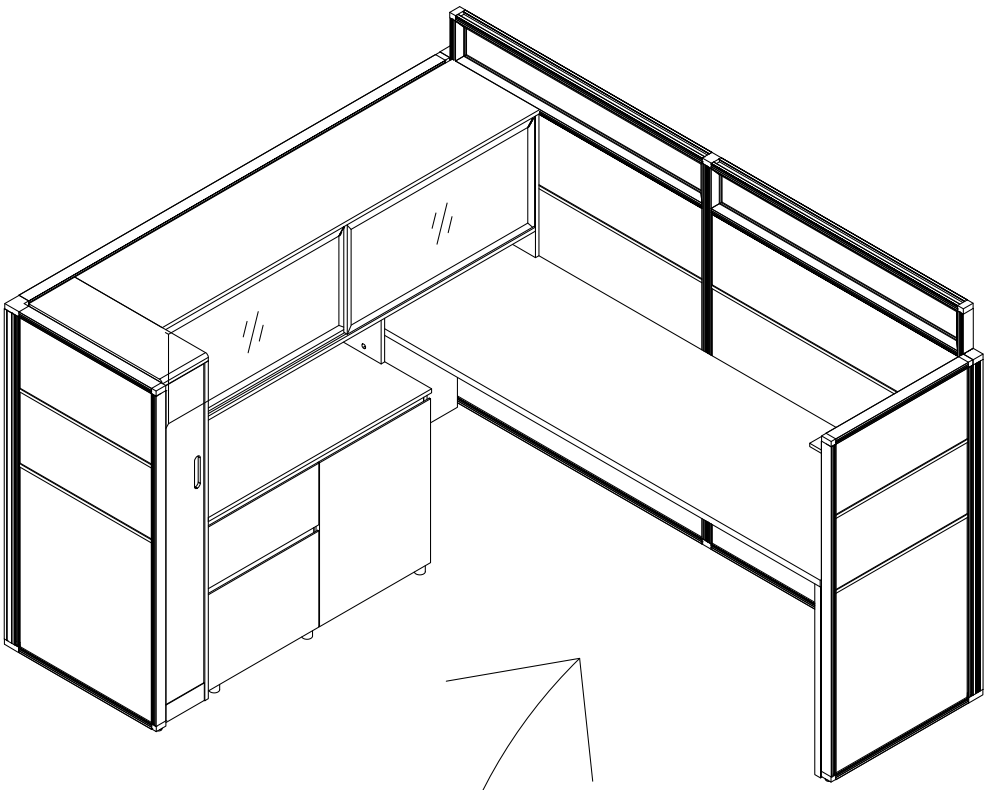

step8

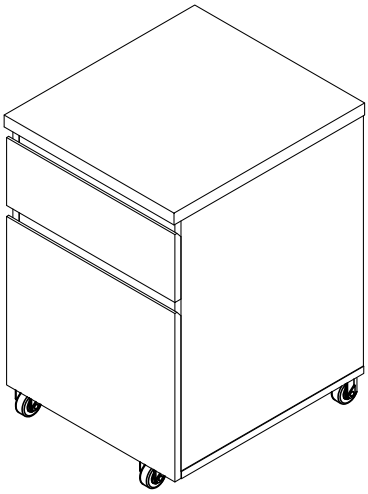

step9

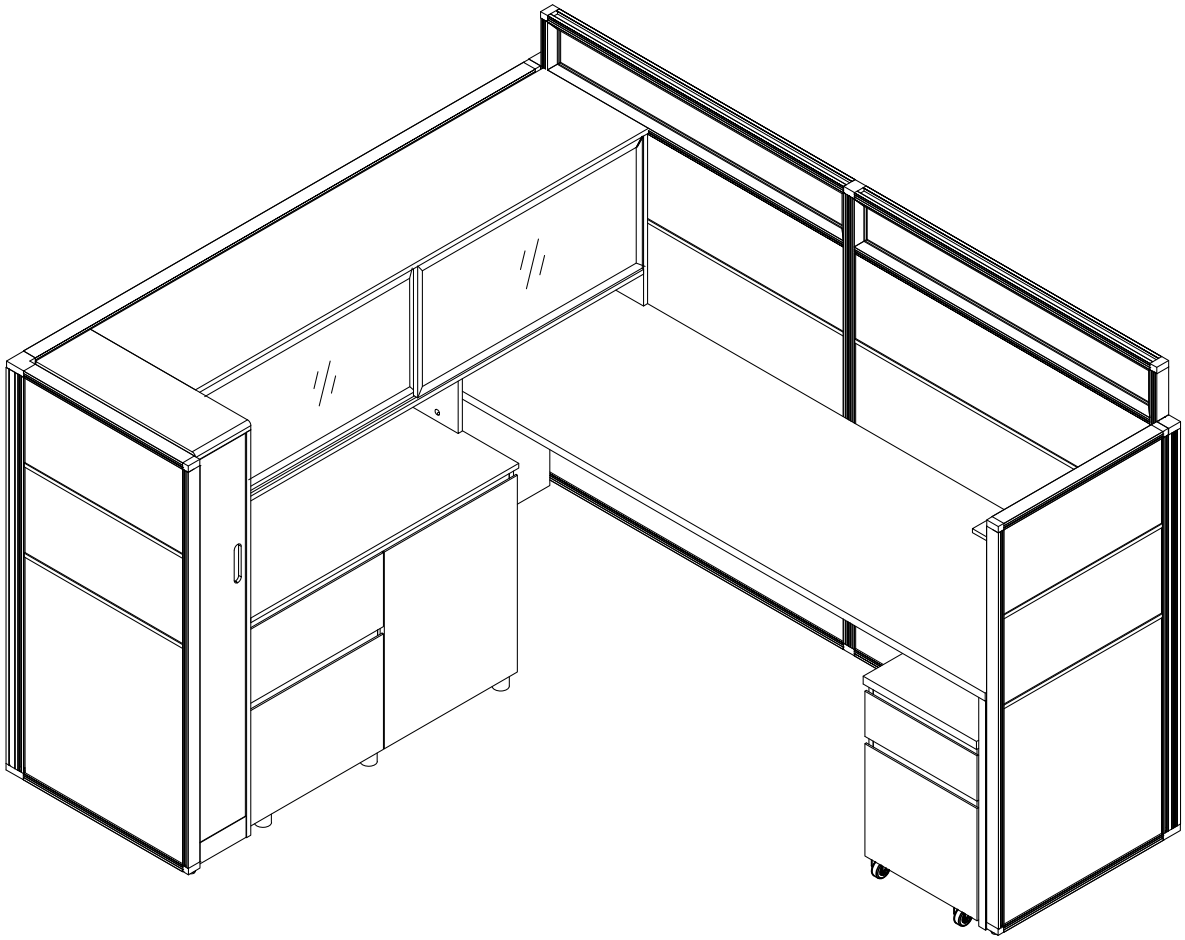

The beginning of installation may feel confusing and painful,but it will get better.

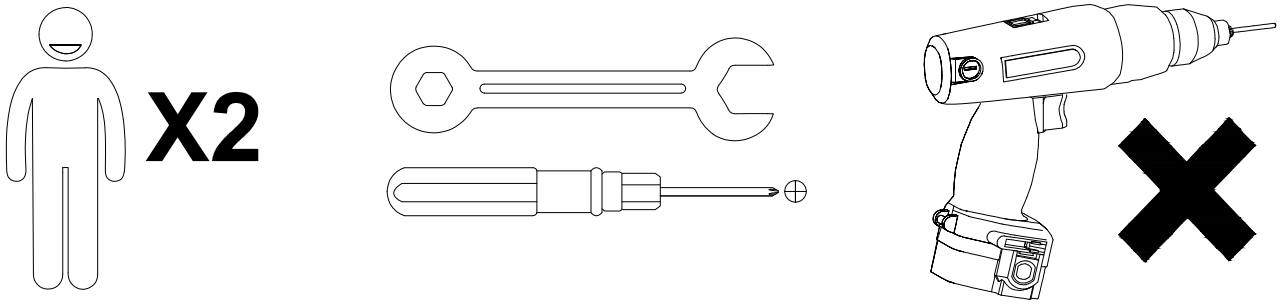

We recommend using hand tools for assembly.

If an electric screwdriver is used, reduce power and torque to avoid damage to the product.

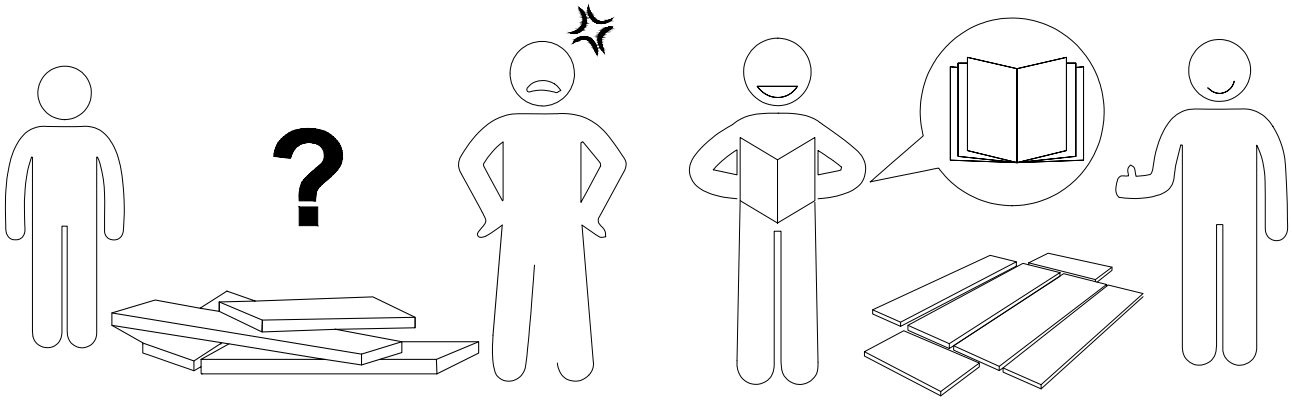

AVOID SCRATCHES

In order to avoid scratching this furniture should be assembled on a soft layer-could be a rug.

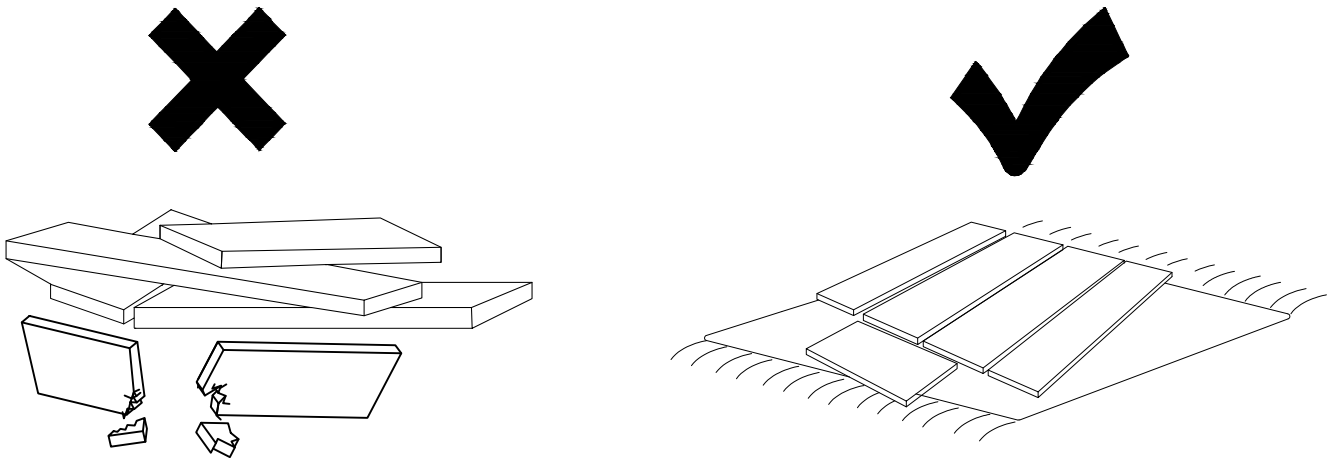

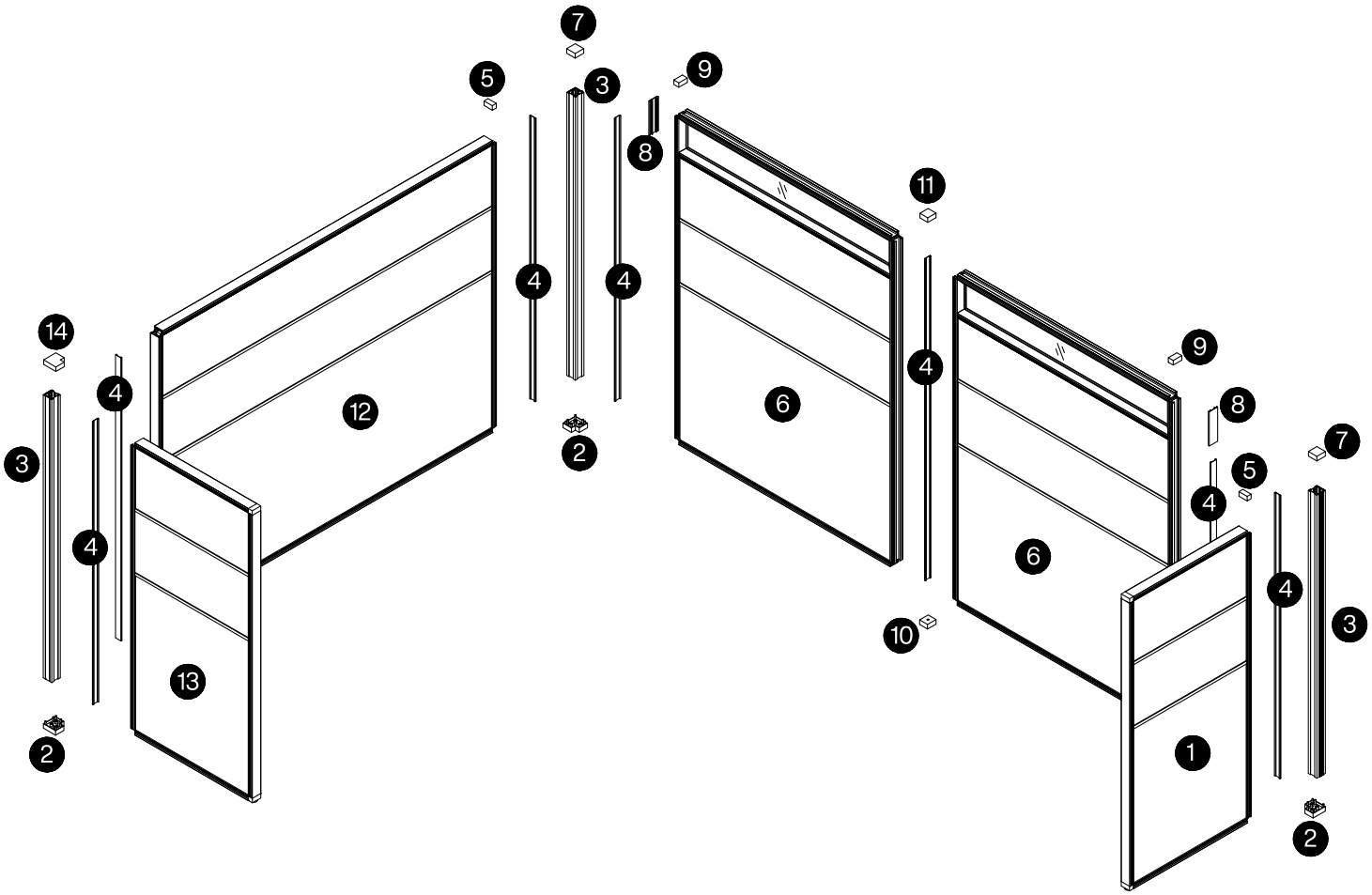

Caution

Make sure all parts are included. Most board parts are labeled or stamped on the raw edge.
Contact us for a free replacement if you encounter any damaged or missing parts.

Parts List

❶ 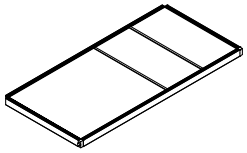 1 pc	❷ 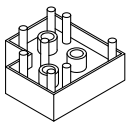 3 pcs	❸ 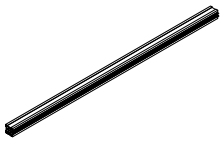 3 pcs	❹ 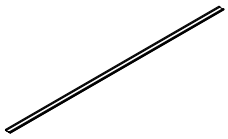 7 pcs	❺ 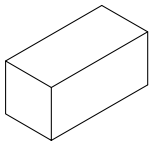 2 pcs
❻ 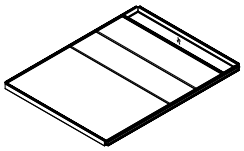 2 pcs	❼ 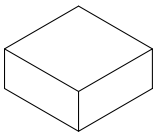 2 pcs	❽ 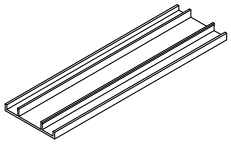 2 pcs	❾ 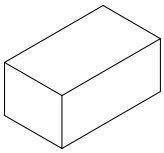 2 pcs	❿ 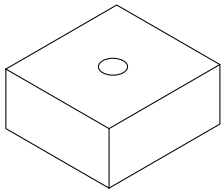 1 pc
⓫ 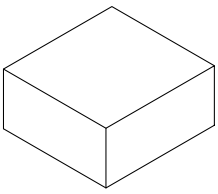 1 pc	⓬ 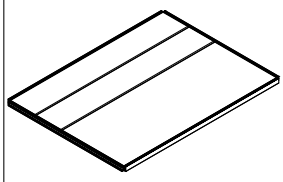 1 pc	⓭ 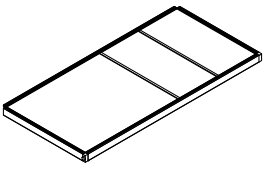 1 pc	⓮ 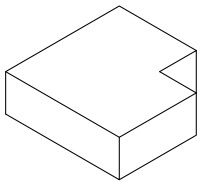 1 pc	

1

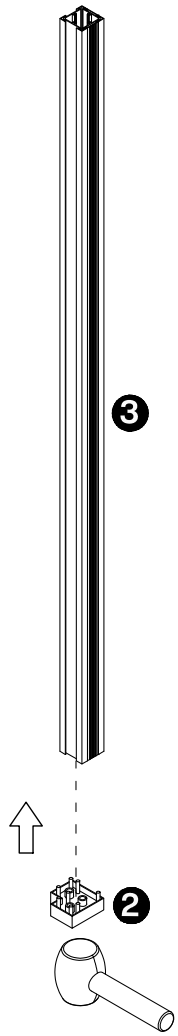

When assembling the screen section of this product, gently tap each component into place with a rubber mallet to ensure a secure fit.

Caution: Please handle the mallet carefully to avoid personal injury

---

2

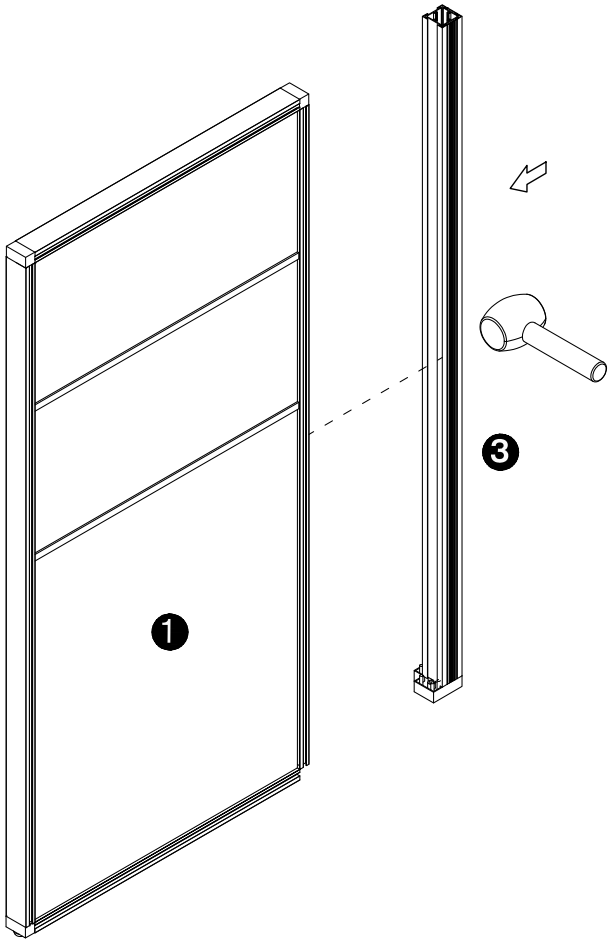

3

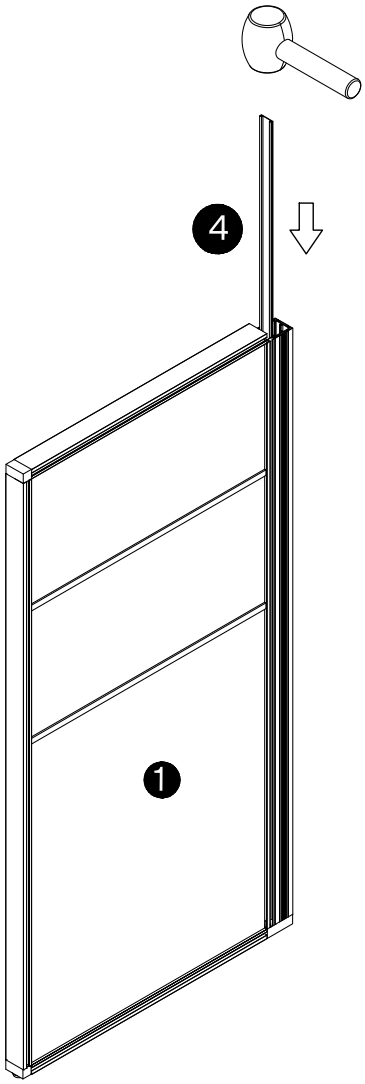

4

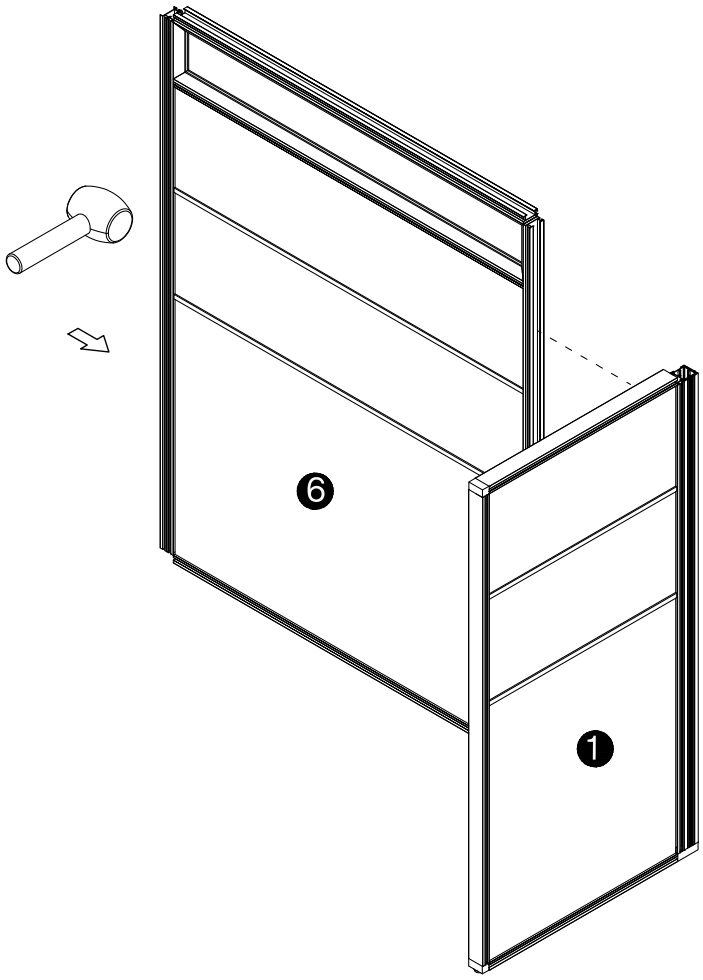

5

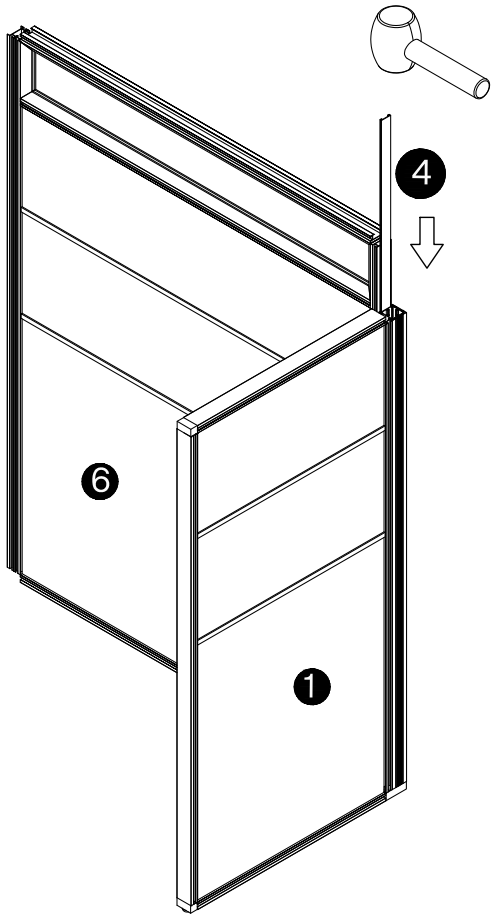

6

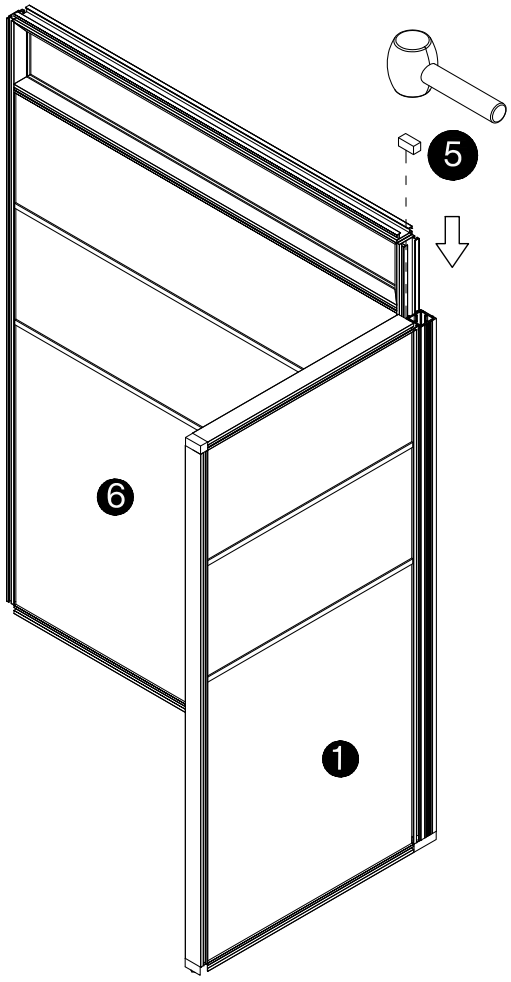

7

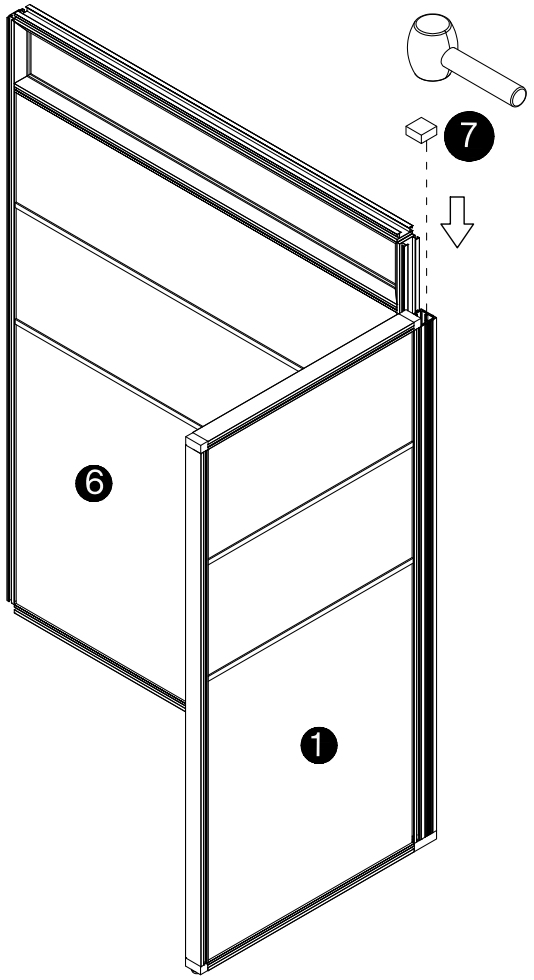

8

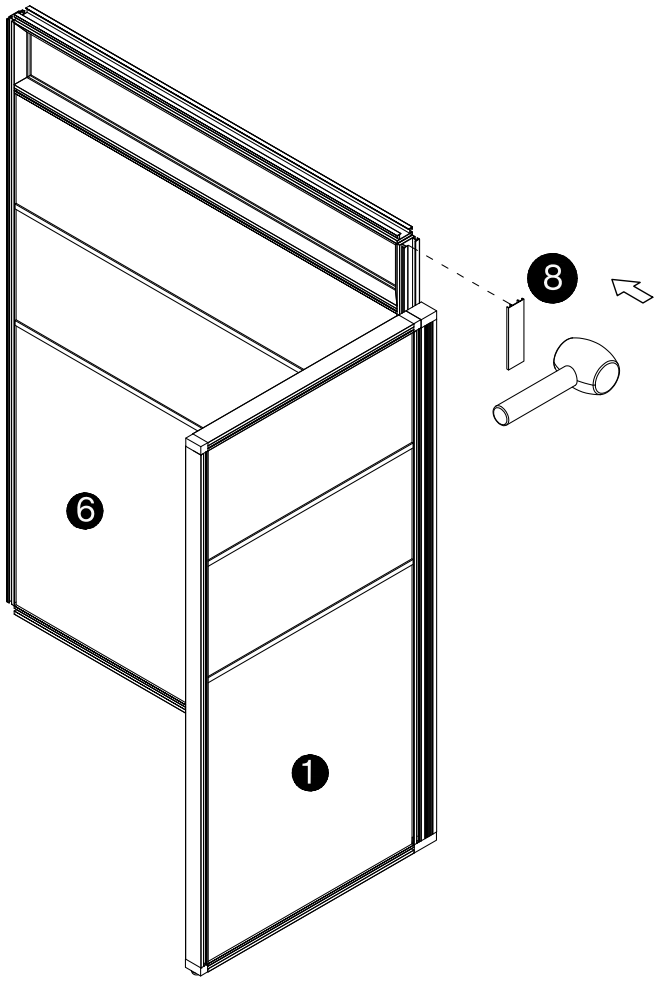

9

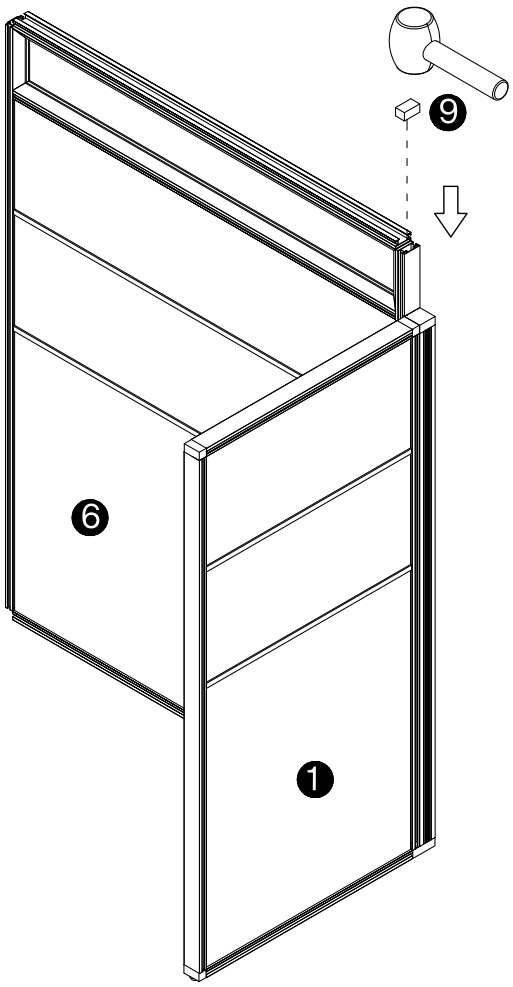

10

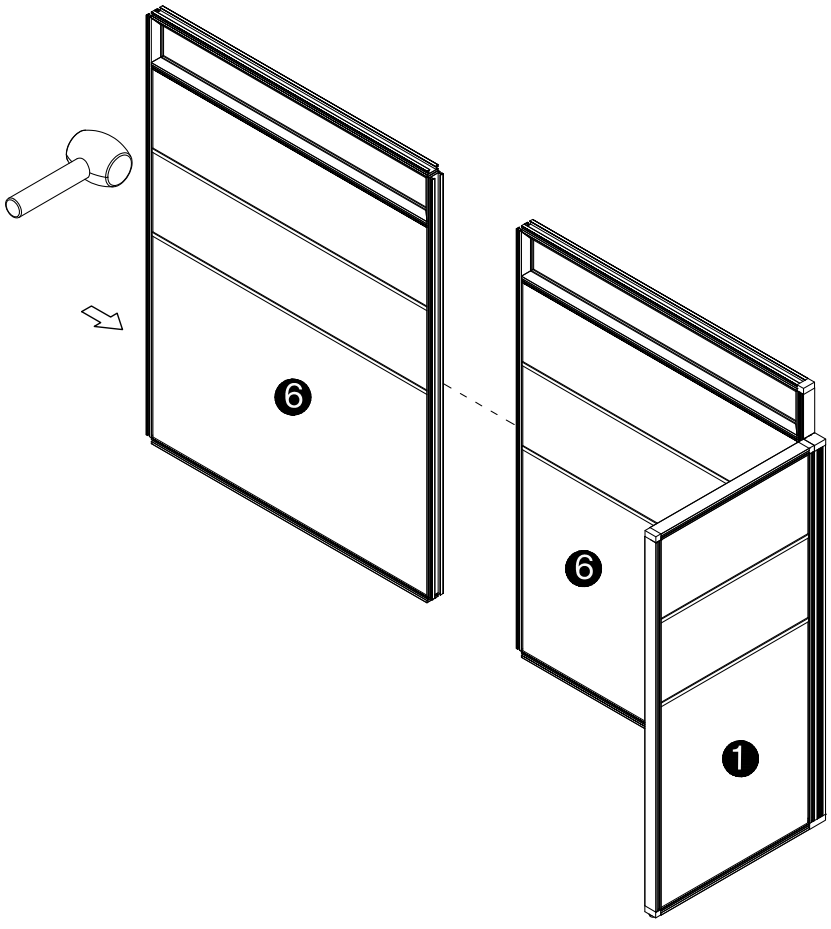

11

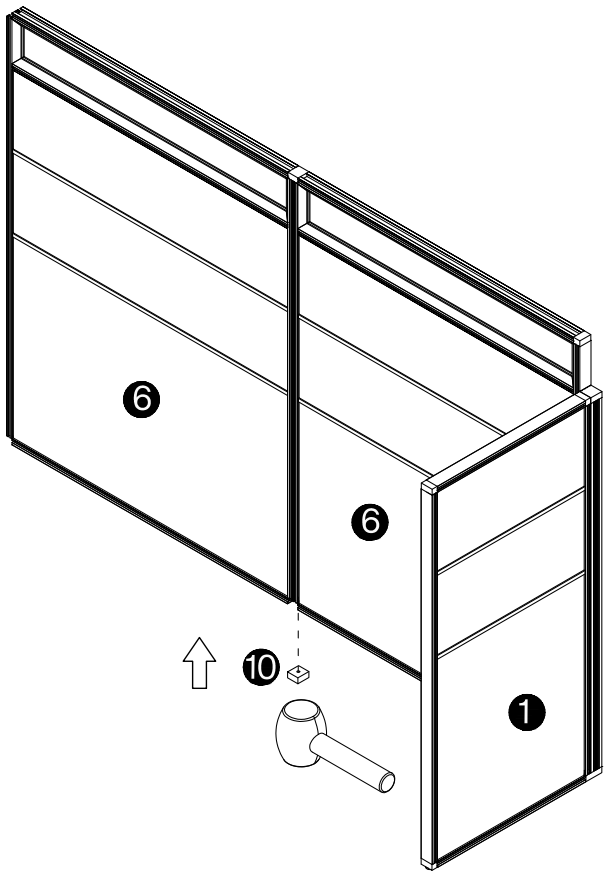

12

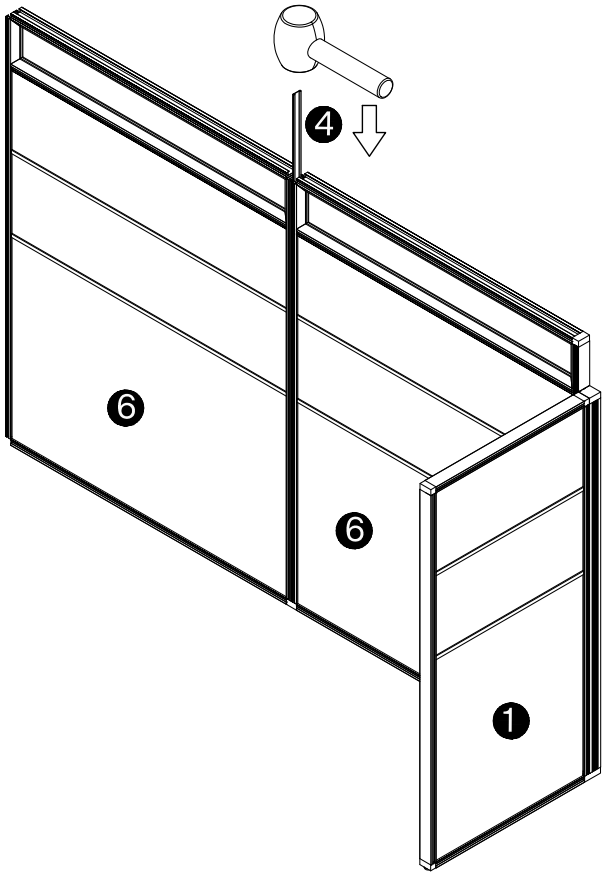

13

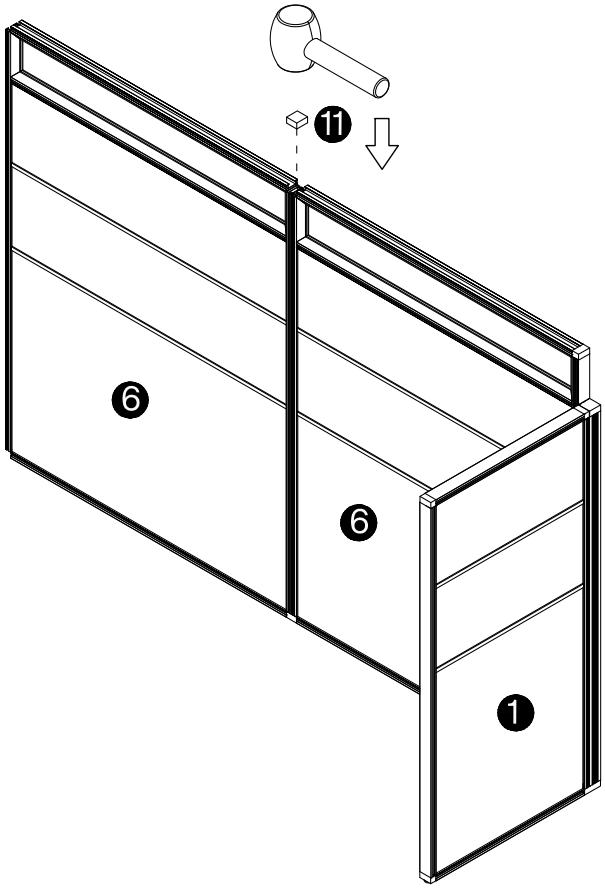

14

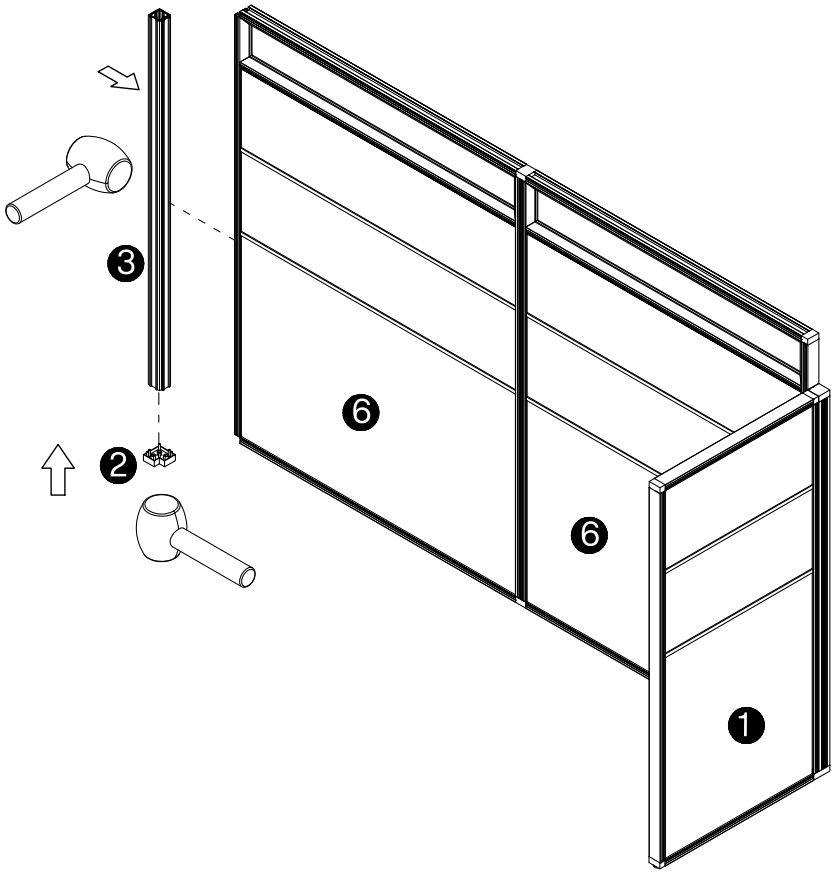

15

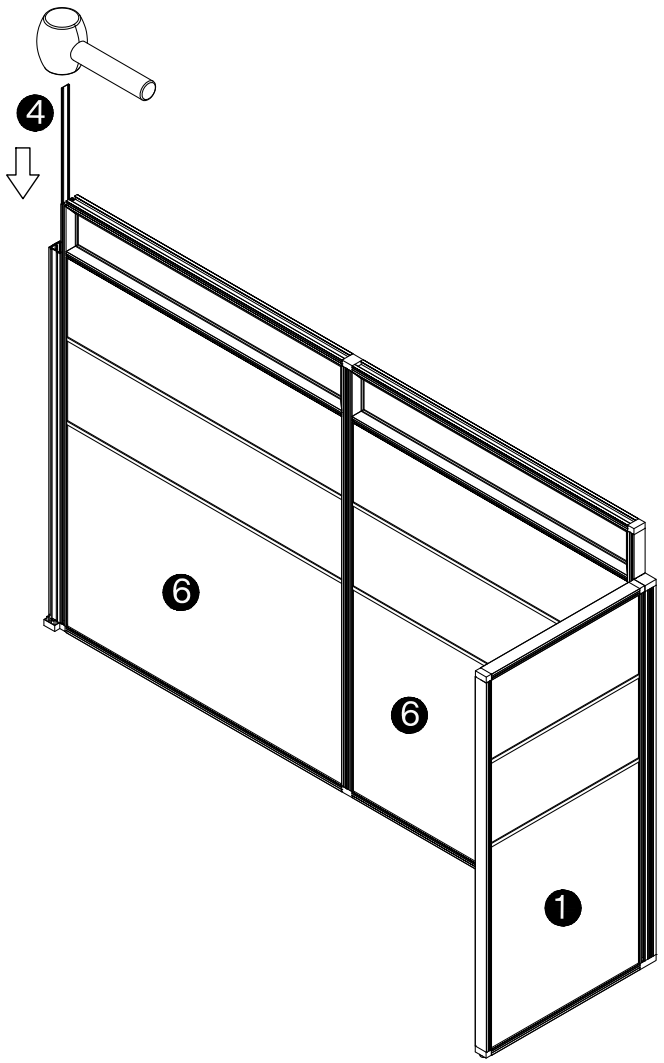

16

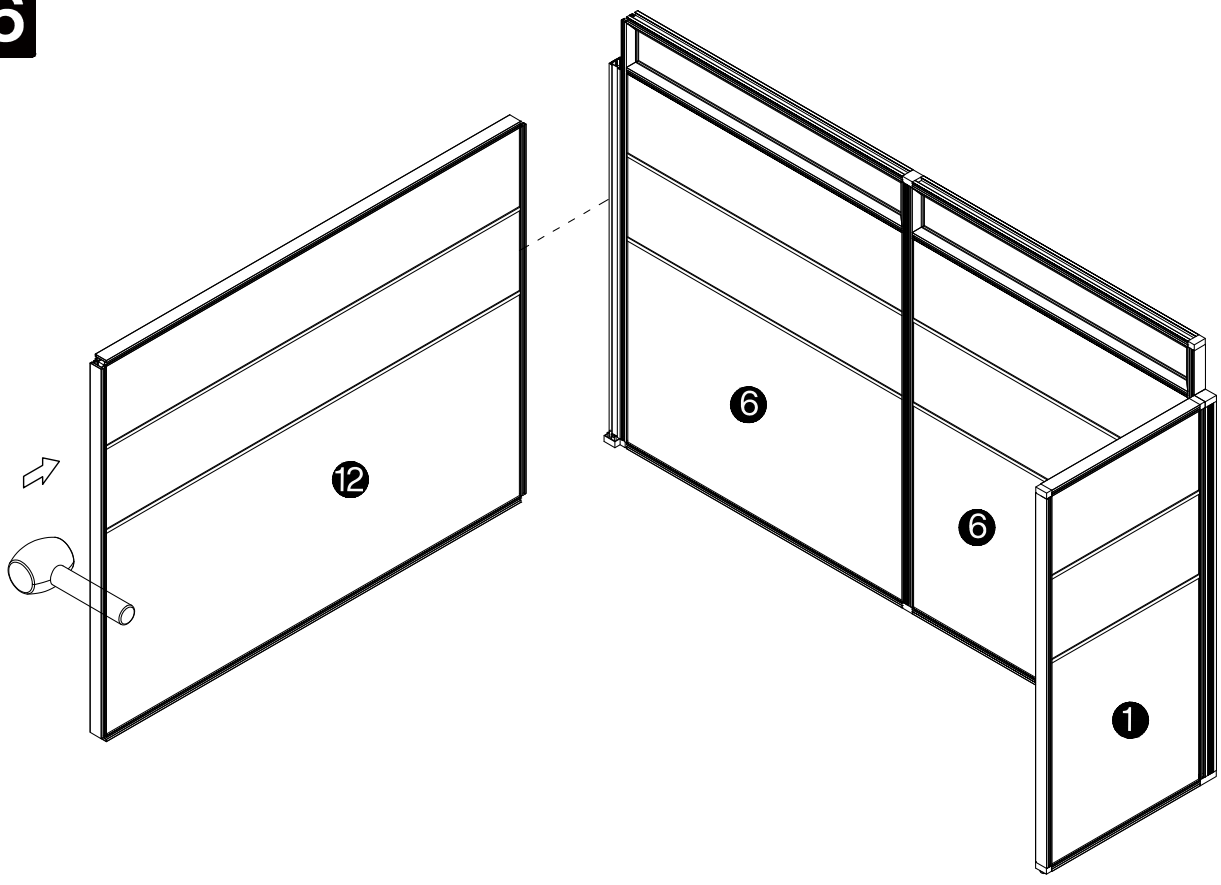

17

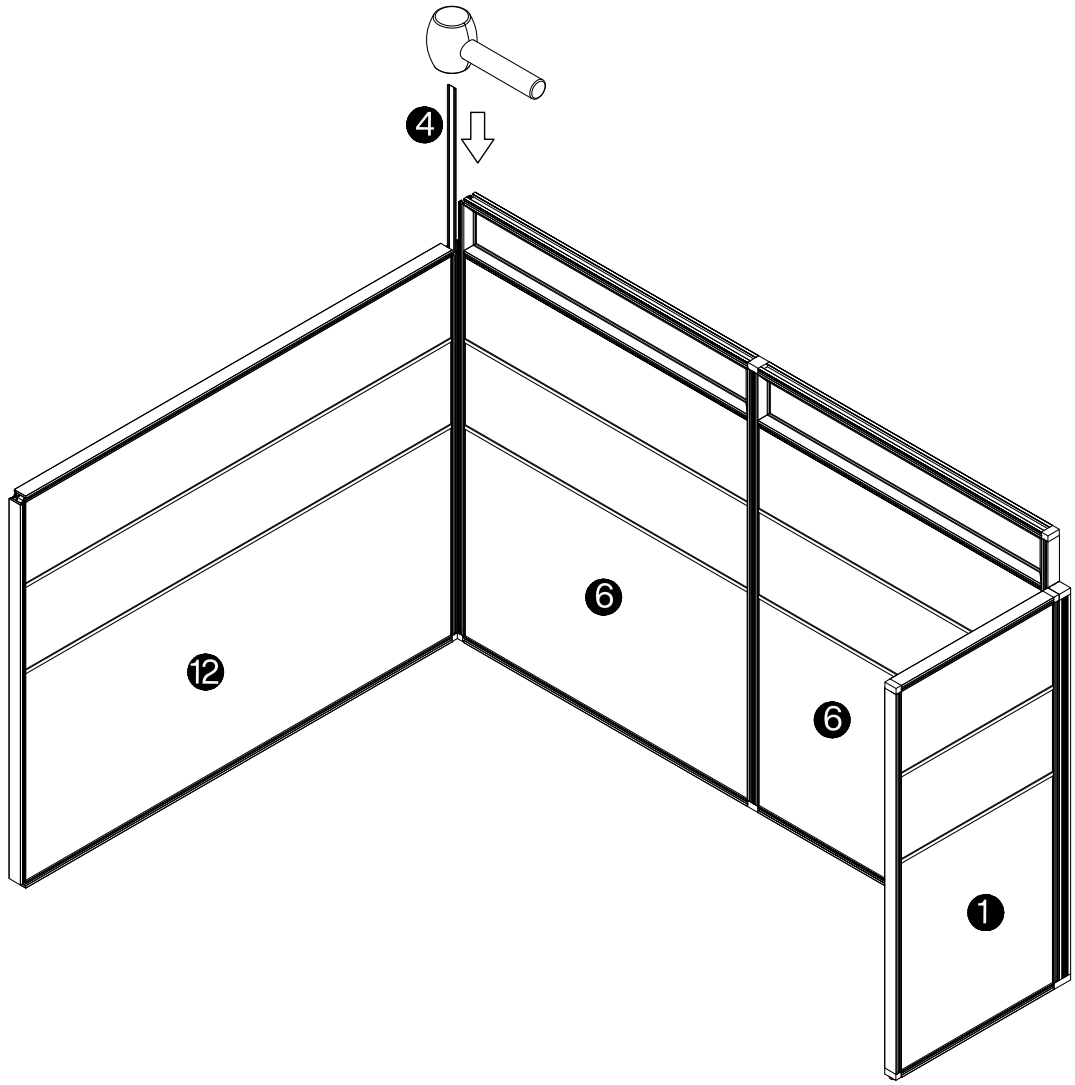

18

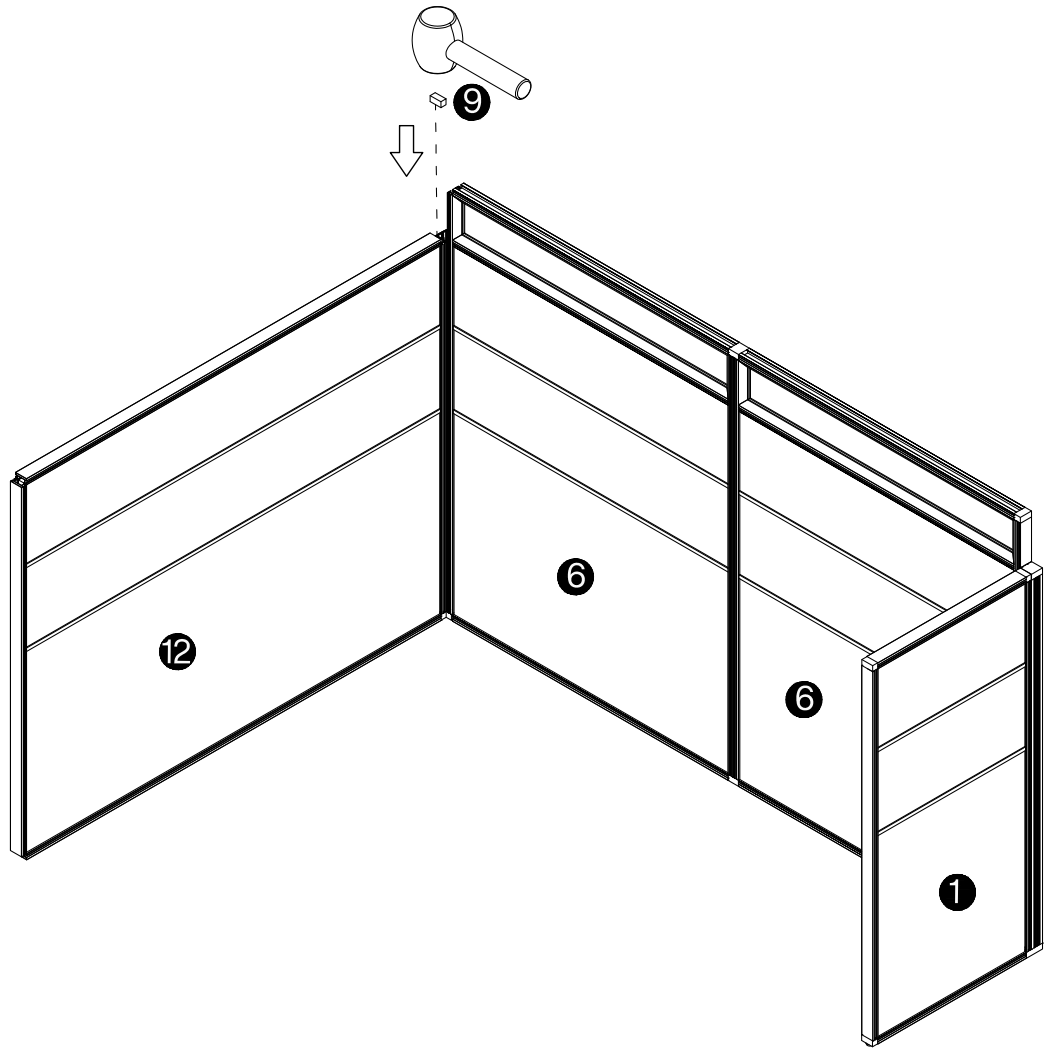

19

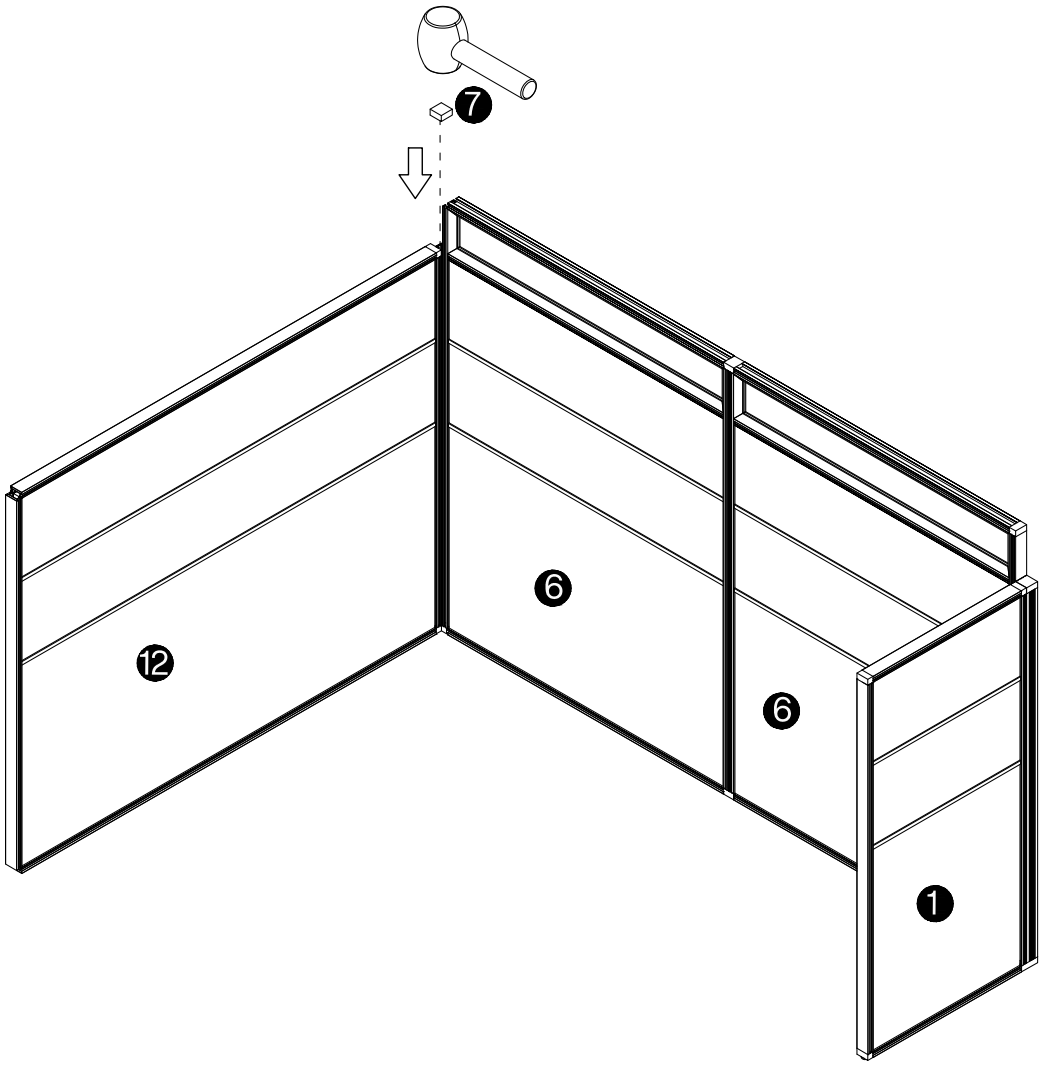

20

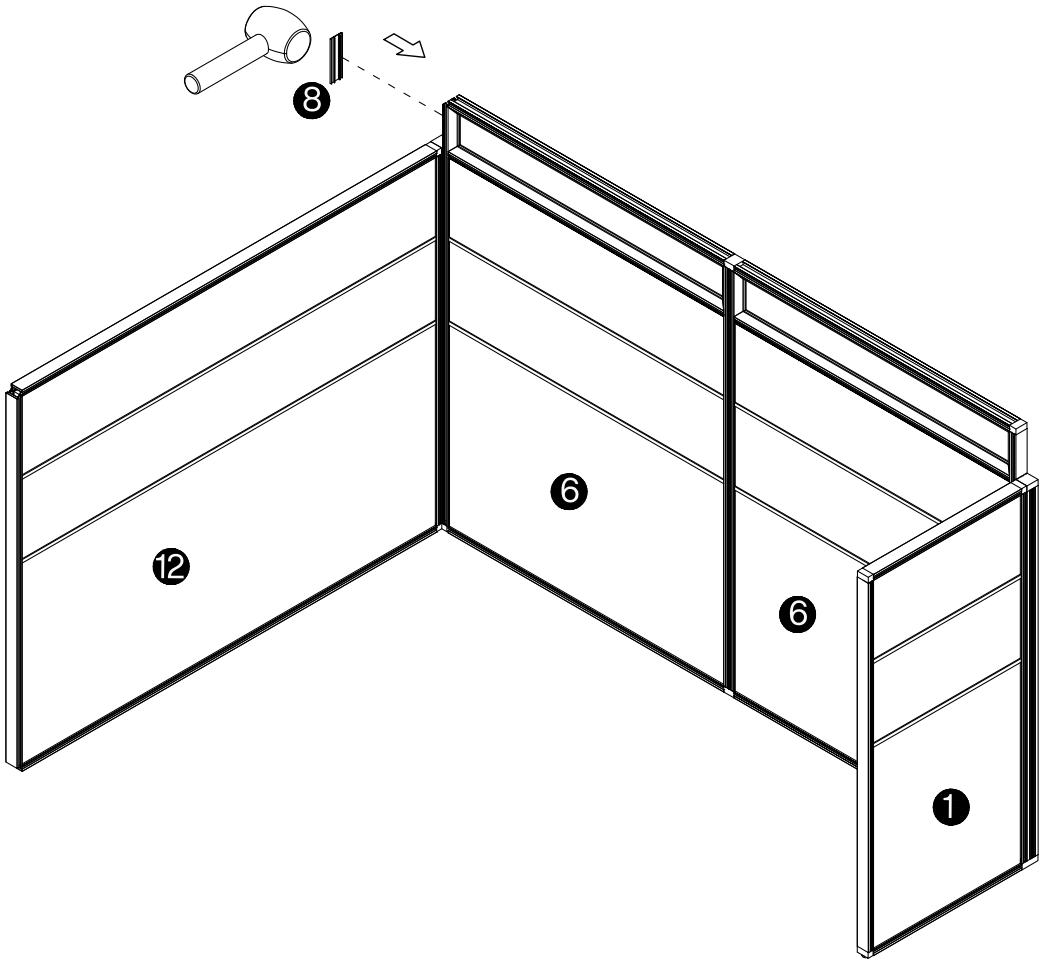

21

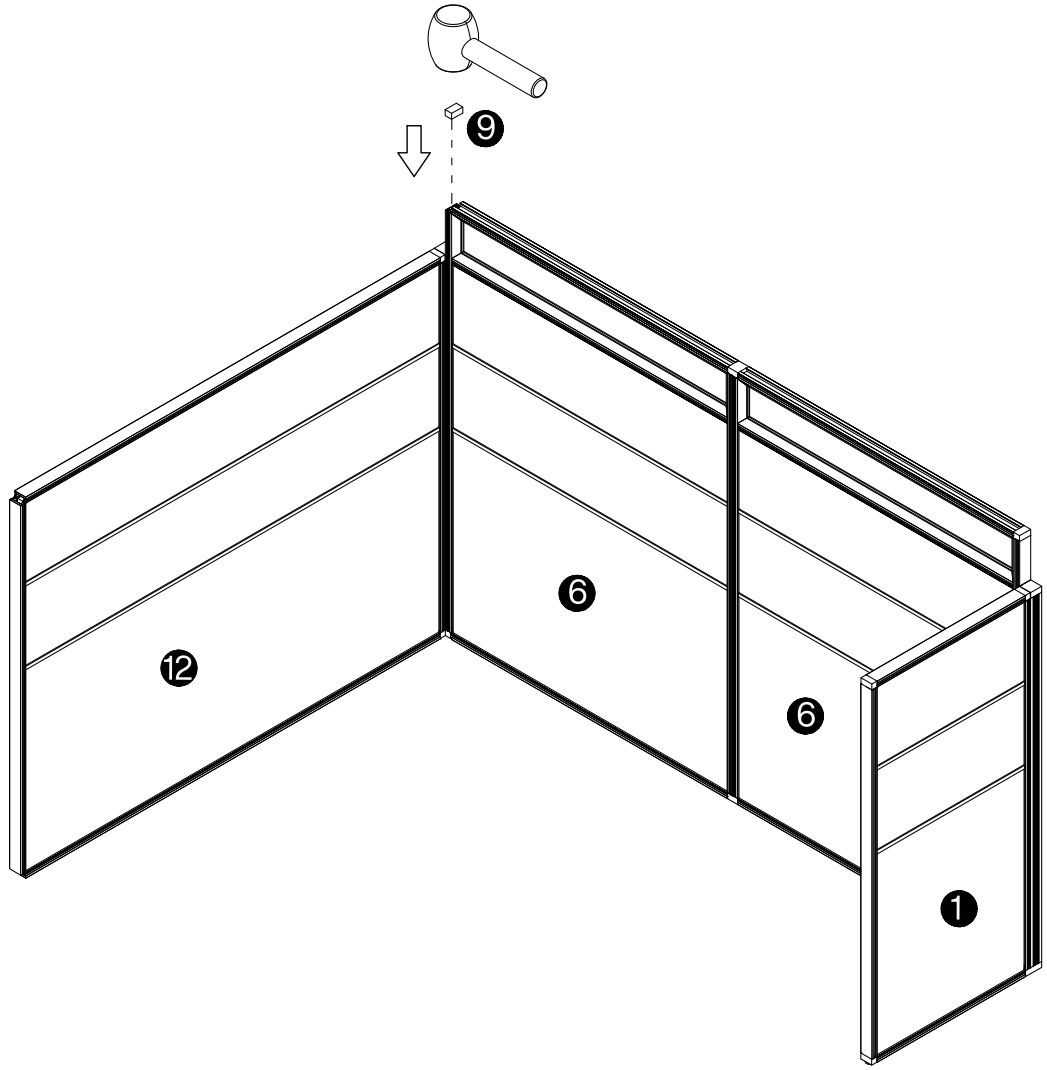

22

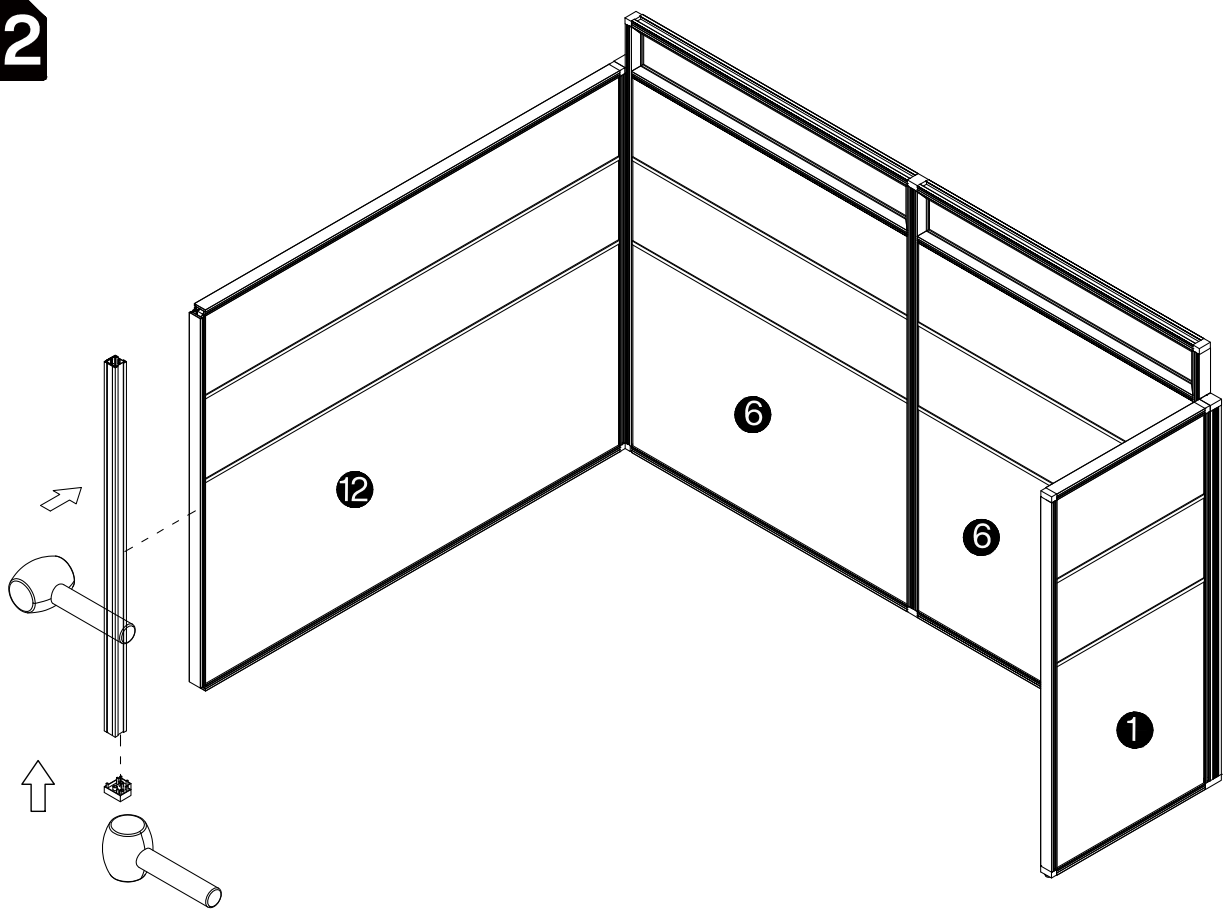

23

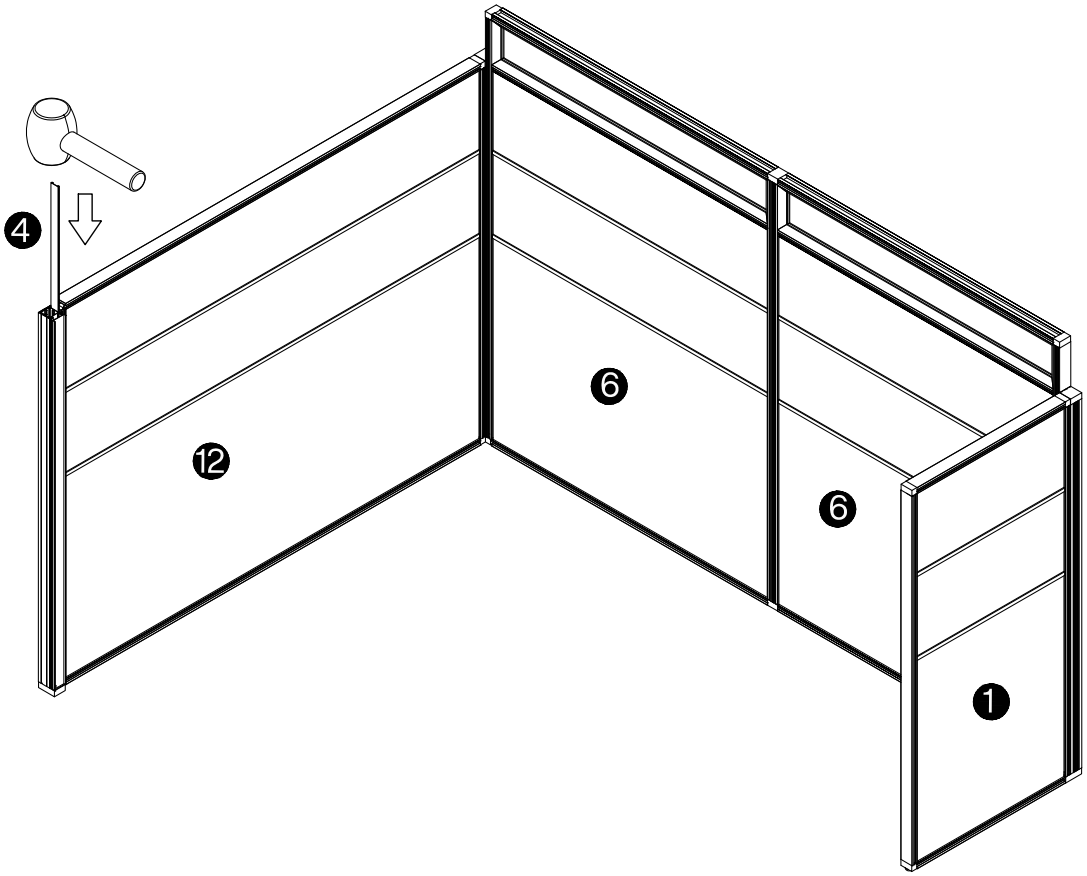

24

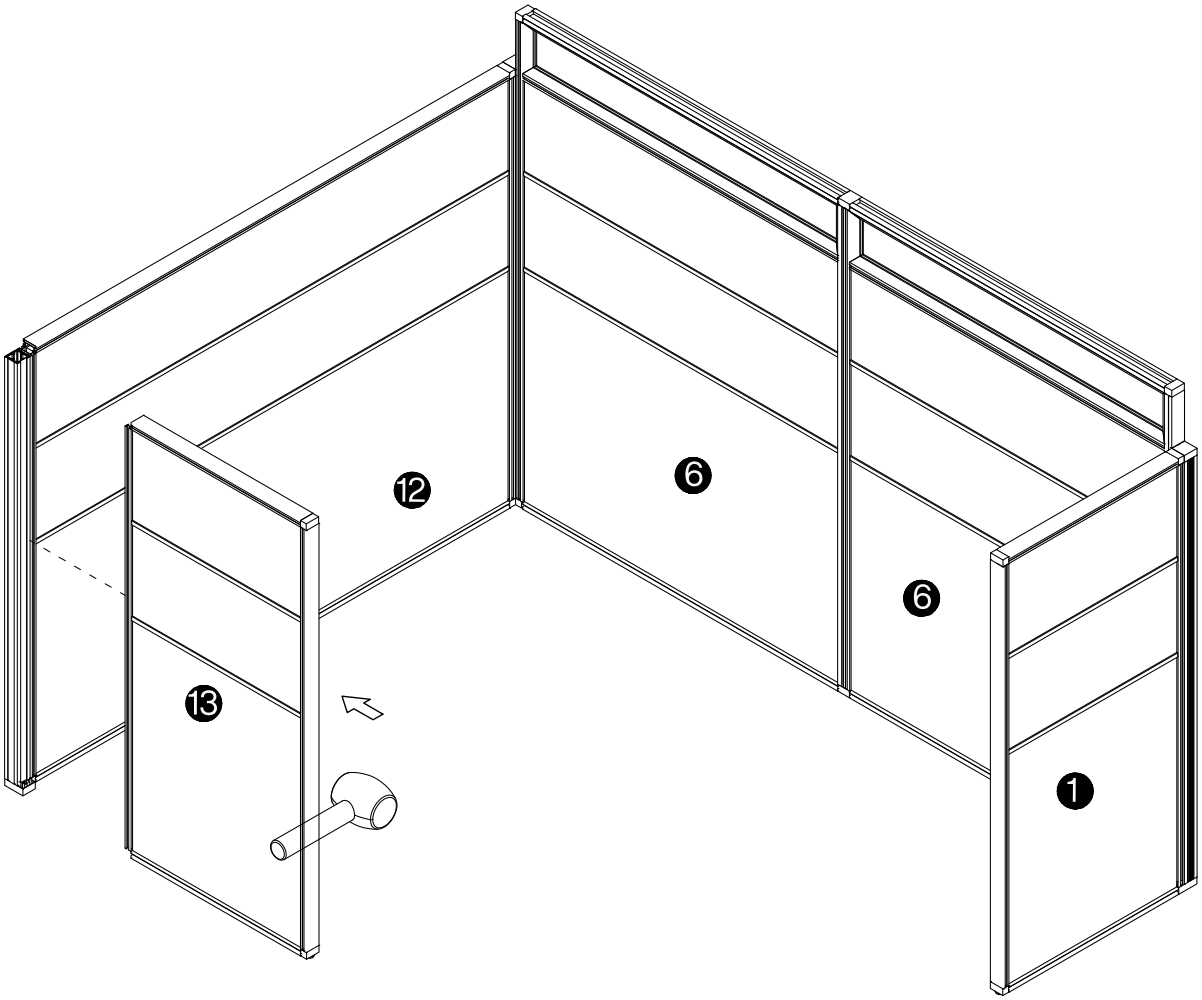

25

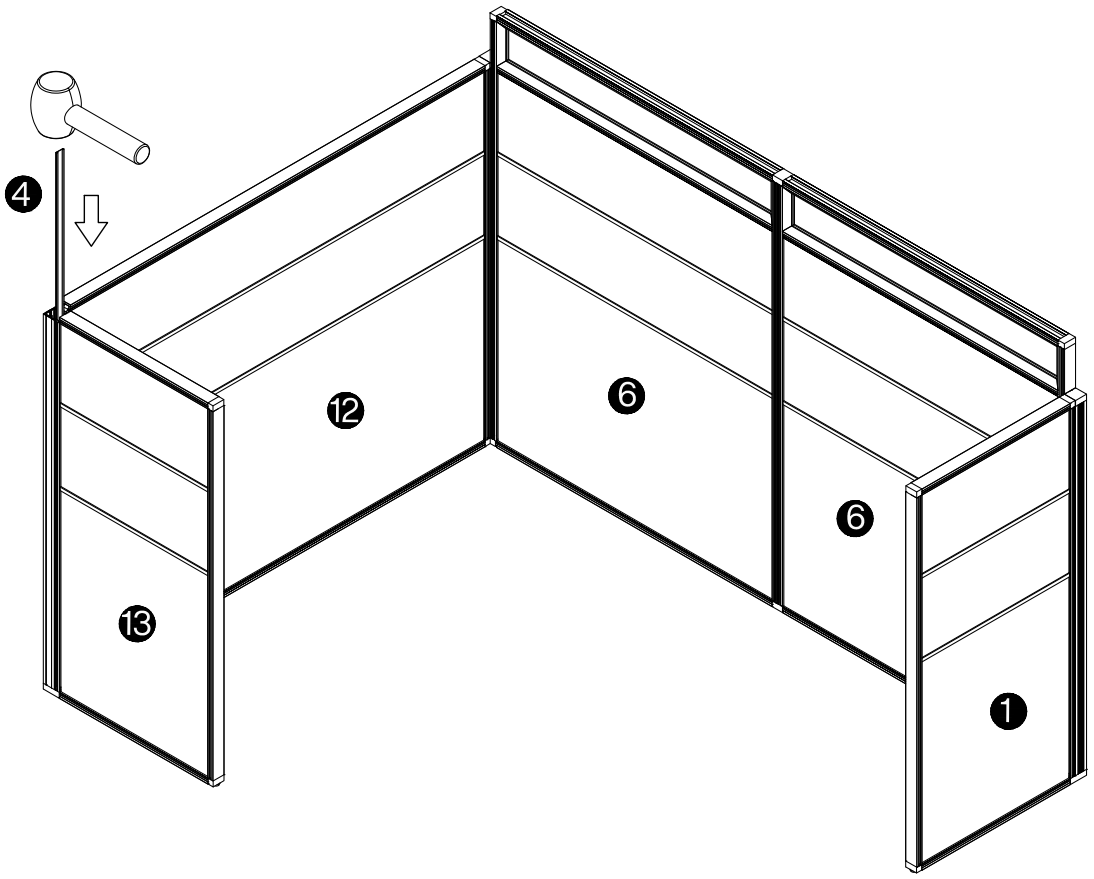

26

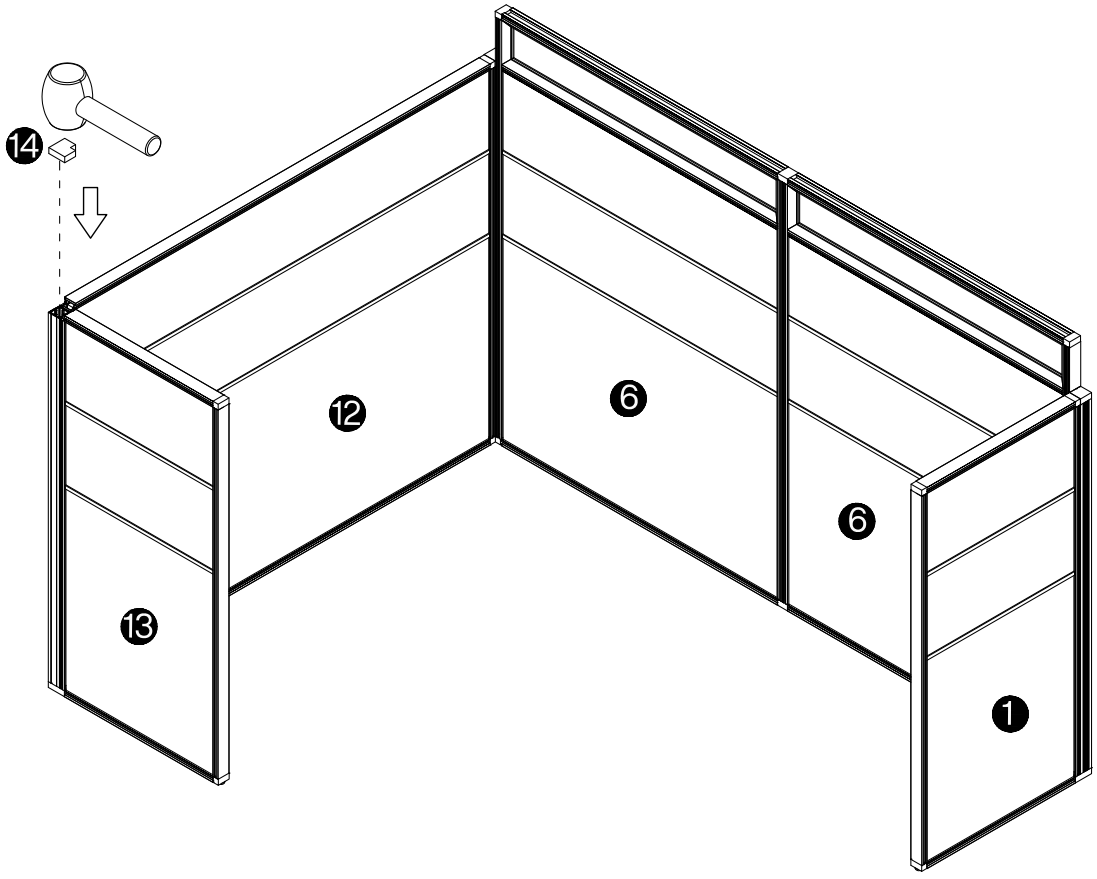

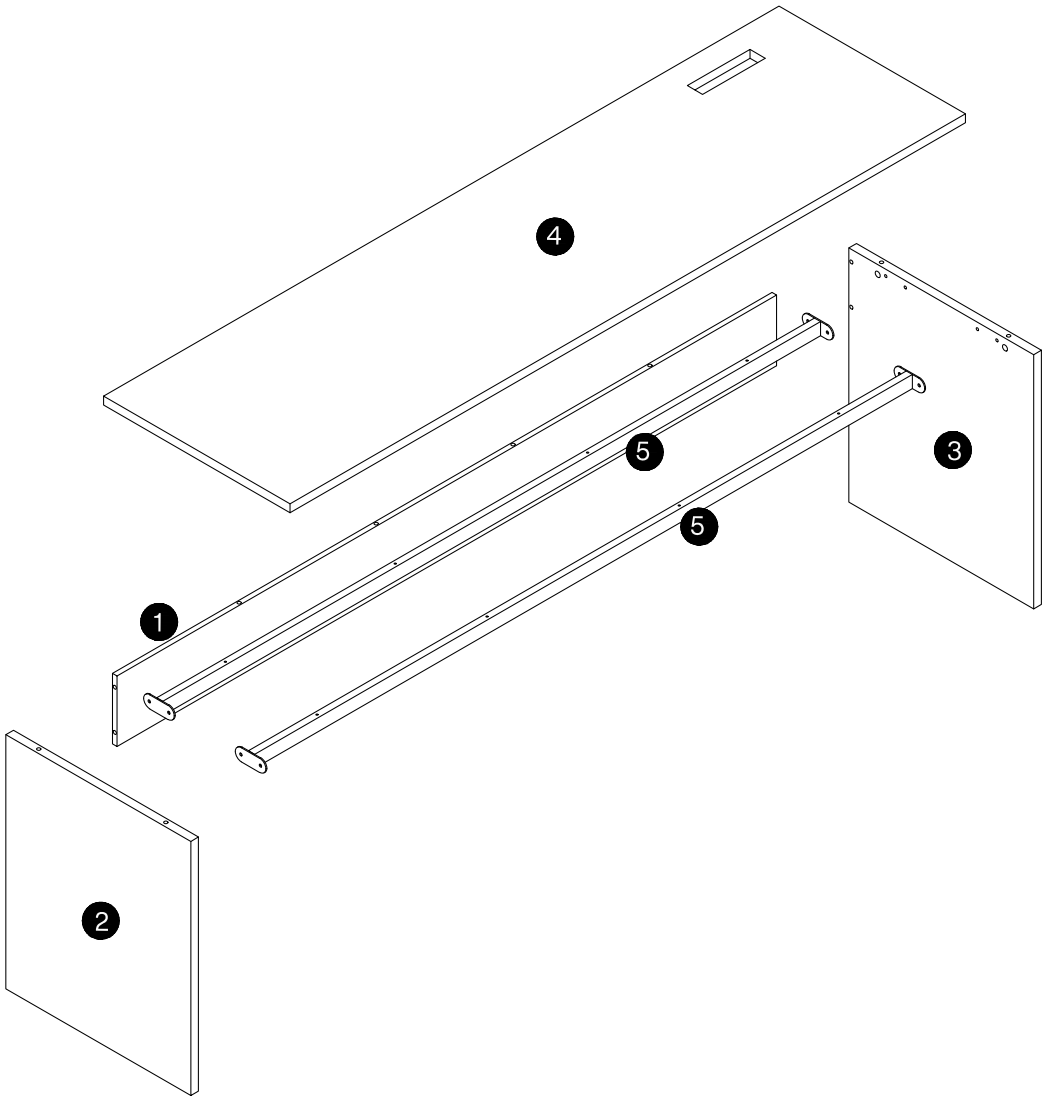

Caution

Make sure all parts are included. Most board parts are labeled or stamped on the raw edge.
Contact us for a free replacement if you encounter any damaged or missing parts.

Parts List

❶	❷	❸	❹	❺
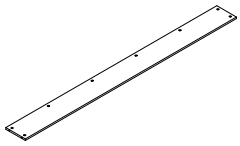	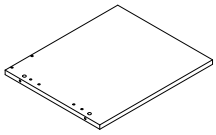	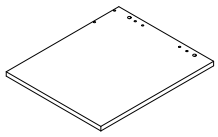	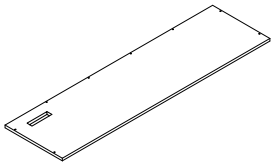	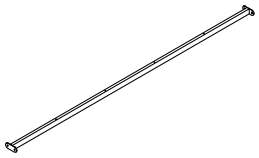
1 pc	1 pc	1 pc	1 pcs	2 pcs

Hardware List

A	B	C	D	E	F
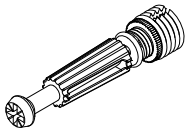	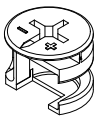	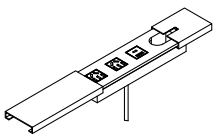	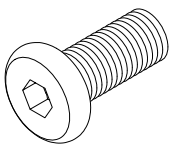	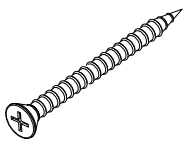	
M6x40mm	Ø15x12mm		M6x12mm	M4x30mm	M4
12+2pcs	12+2 pcs	1 pc	8 pcs	8 pcs	1 pc
G	**H**				
	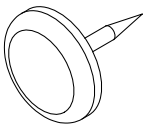				
1 pc	4 pcs				

1

H	A
	 M6x40mm
2 pcs	2 pcs

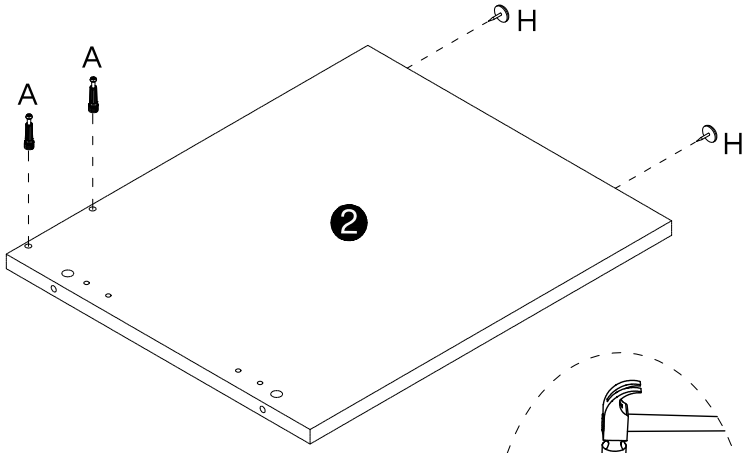

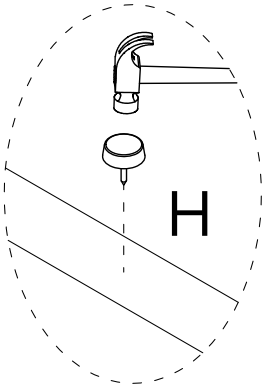

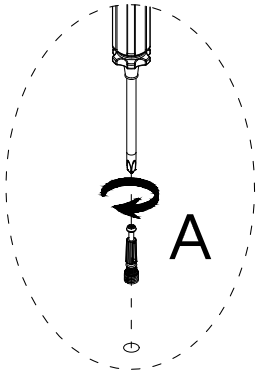

Caution! Tap lightly

2

H	A
	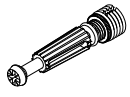 M6x40mm
2 pcs	2 pcs

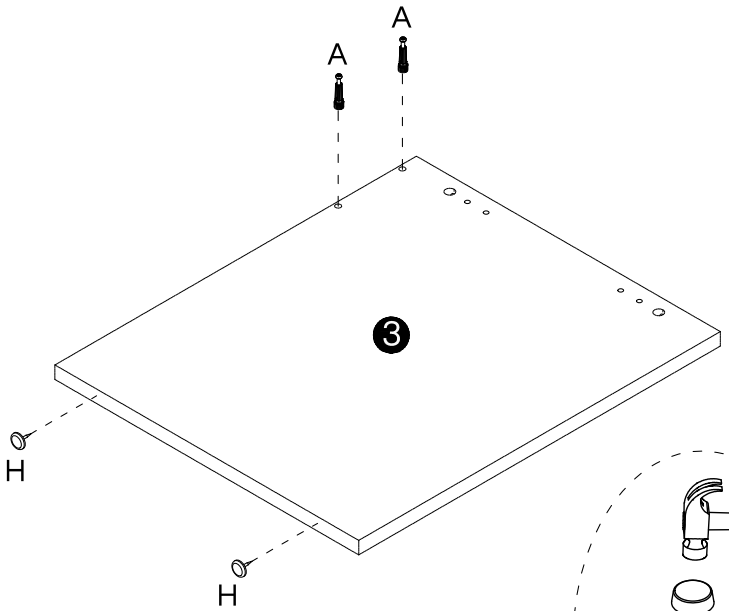

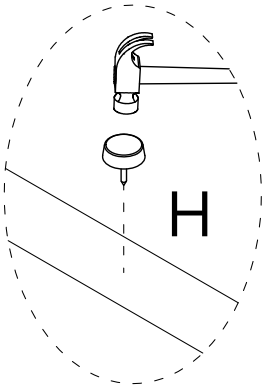

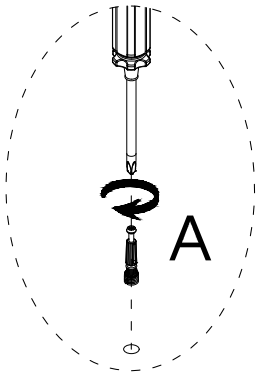

Caution! Tap lightly

3

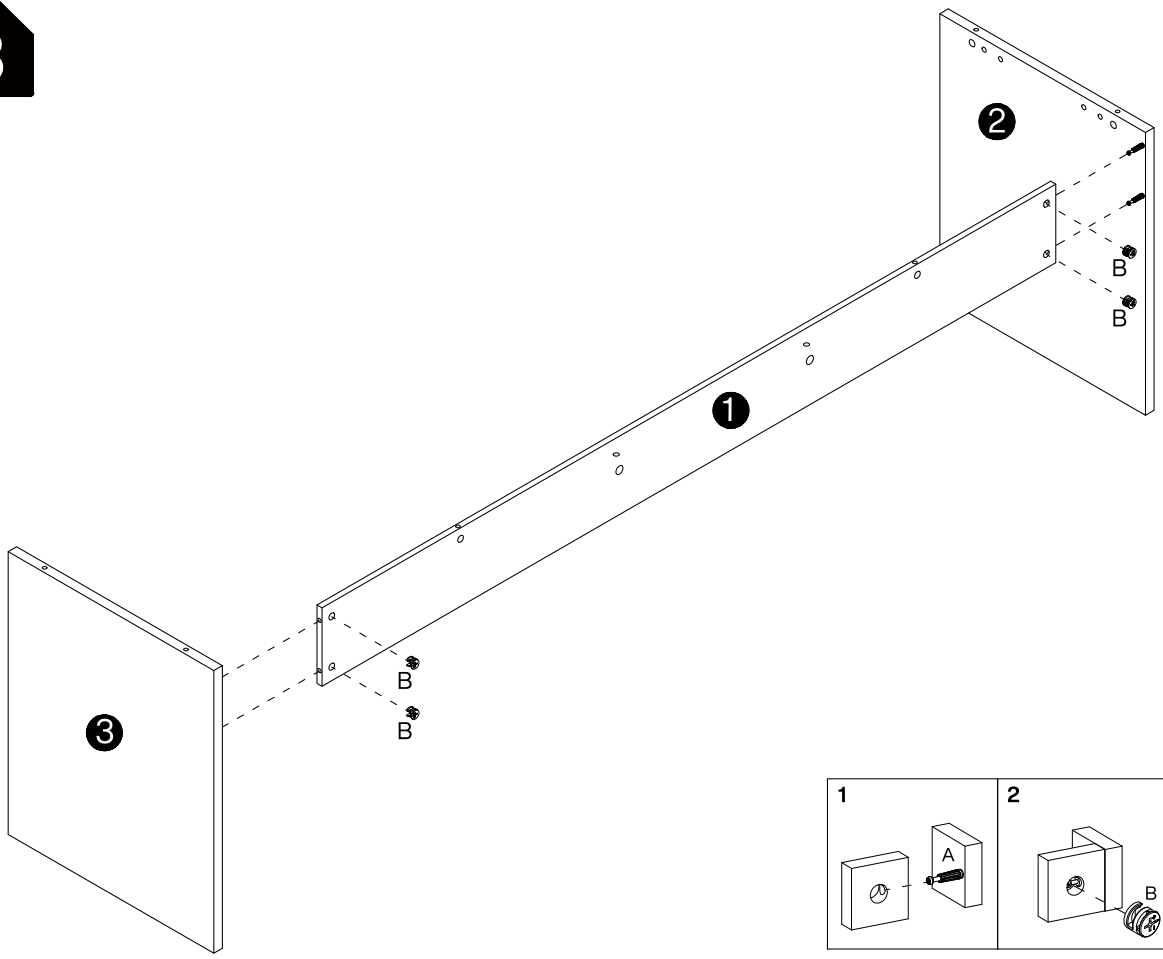

B

Ø15X12 mm
4 pcs

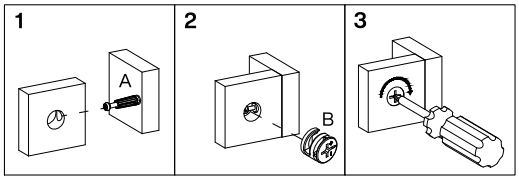

4

A

M6x40mm
8 pcs

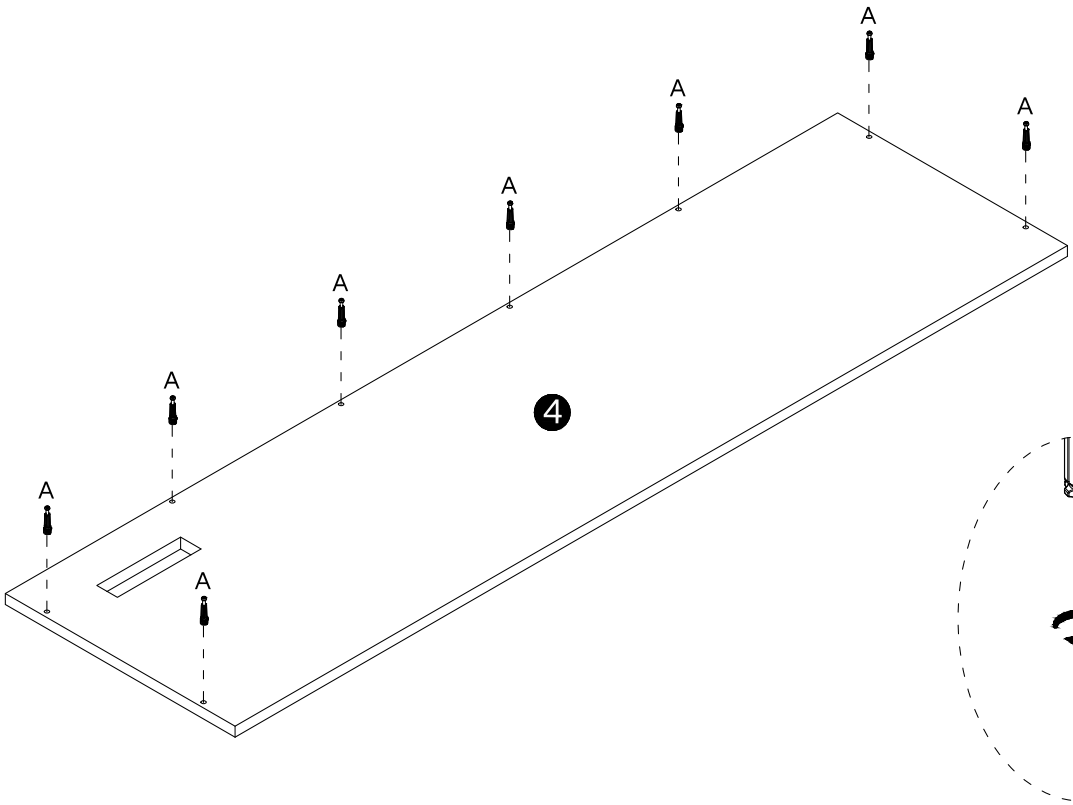

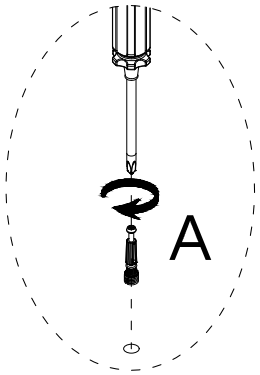

5

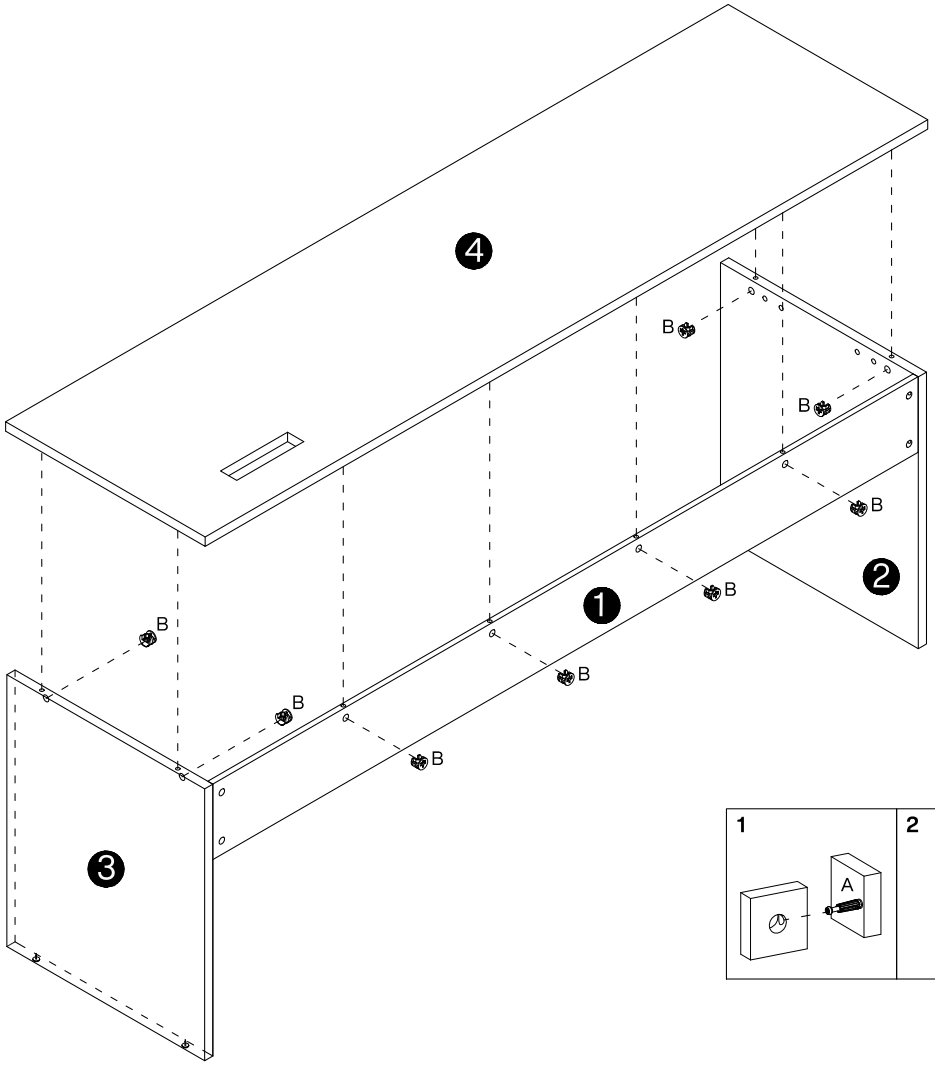

B

Ø15X12 mm
8 pcs

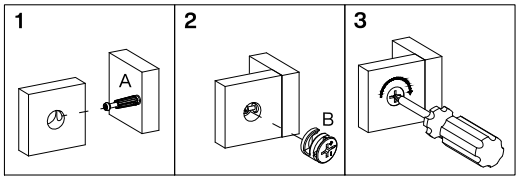

6

C	D	E
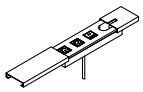	 M6x12mm	 M4x30mm
1 pc	8 pcs	8 pcs

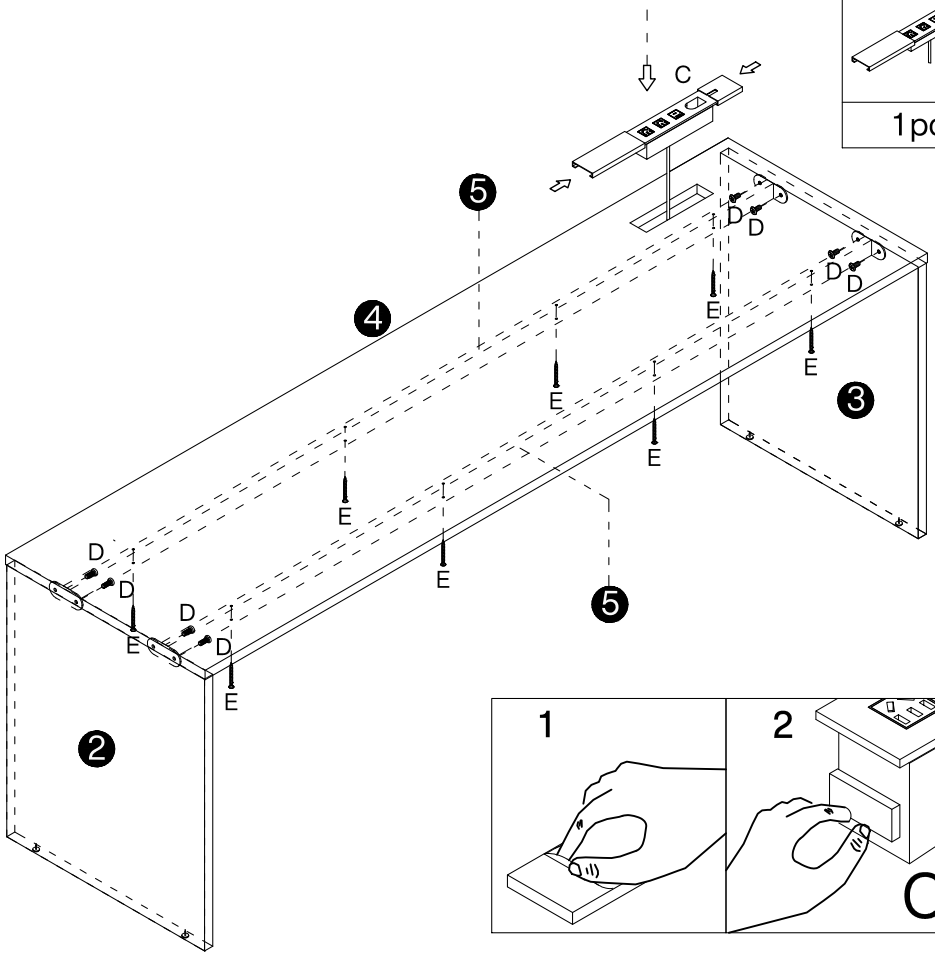

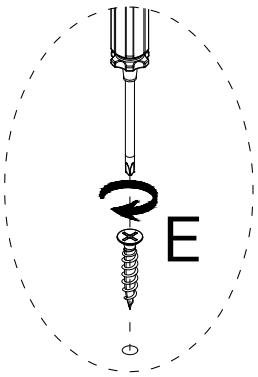

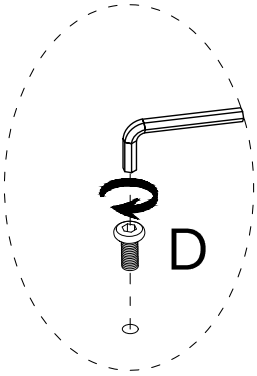

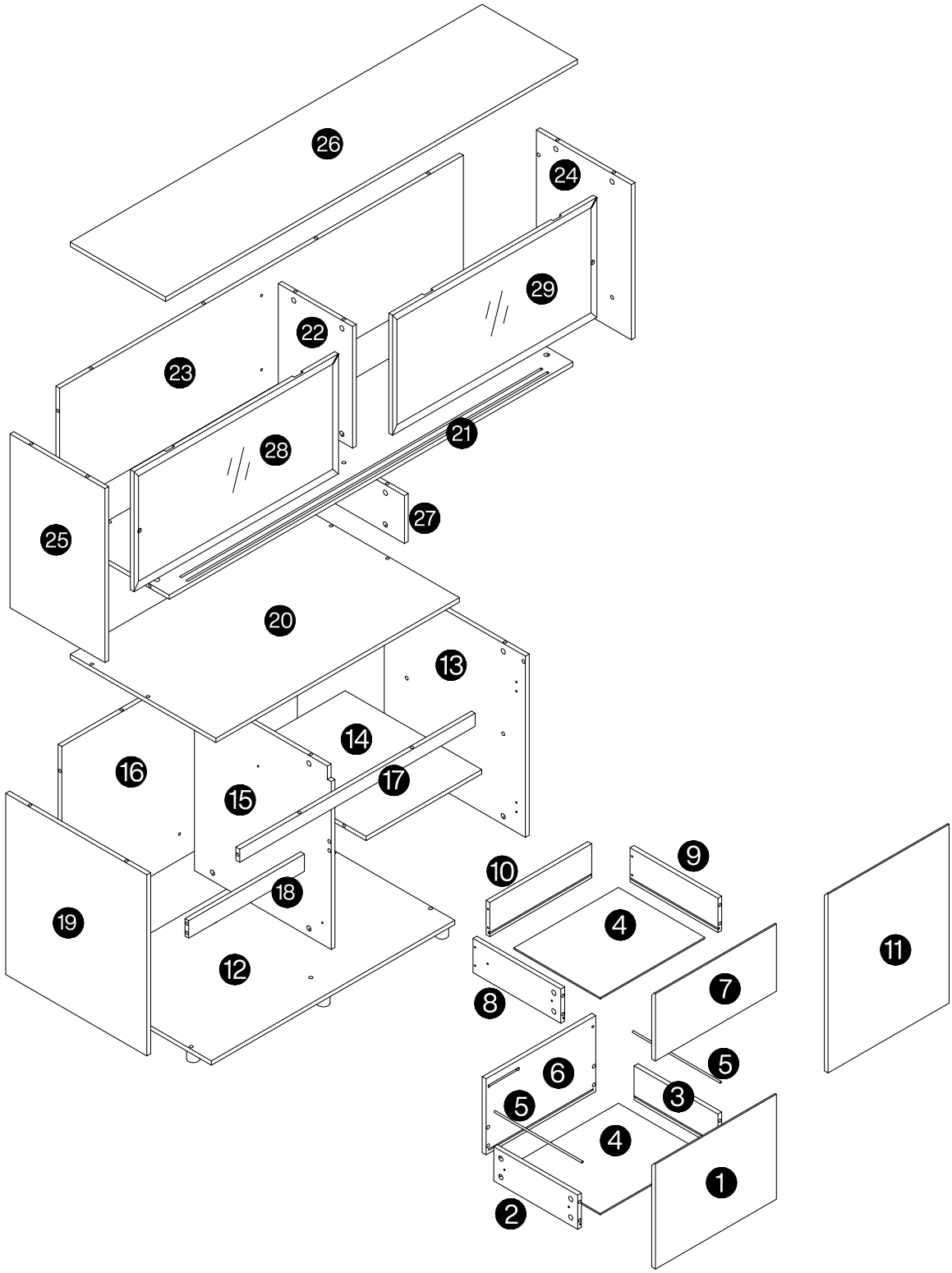

Caution

Make sure all parts are included. Most board parts are labeled or stamped on the raw edge.
Contact us for a free replacement if you encounter any damaged or missing parts.

Parts List

1 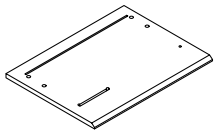 1 pc	2 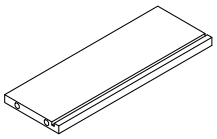 1 pc	3 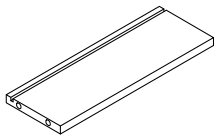 1 pc	4 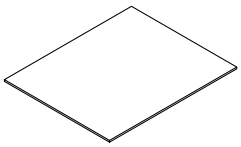 2 pcs	5 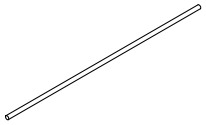 2 pcs
6 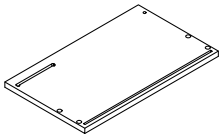 1 pc	7 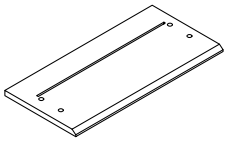 1 pc	8 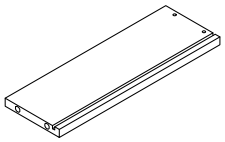 1 pc	9 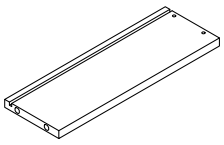 1 pc	10 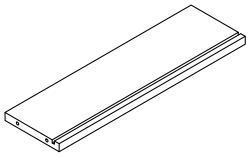 1 pc
11 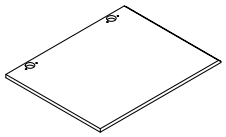 1 pc	12 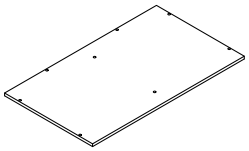 1 pc	13 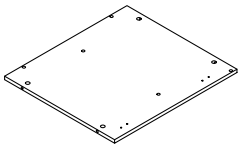 1 pc	14 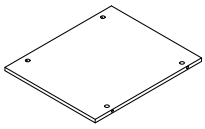 1 pc	15 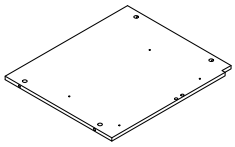 1 pc
16 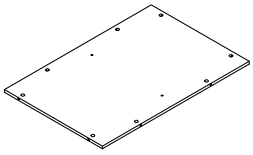 1 pc	17 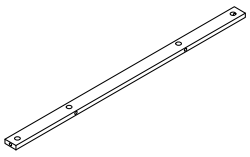 1 pc	18 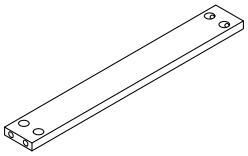 1 pc	19 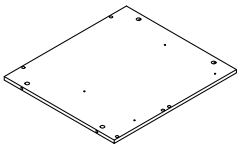 1 pc	20 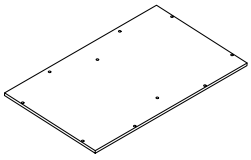 1 pc
21 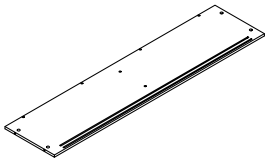 1 pc	22 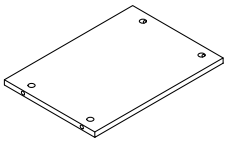 1 pc	23 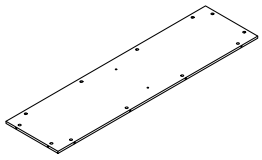 1 pc	24 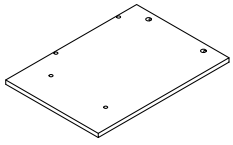 1 pc	25 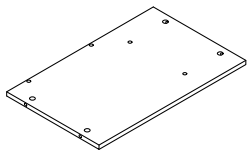 1 pc
26 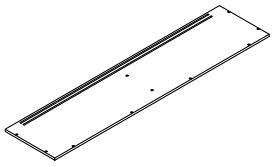 1 pc	27 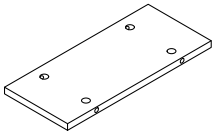 1 pc	28 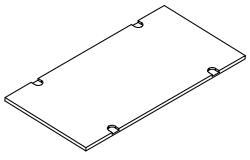 1 pc	29 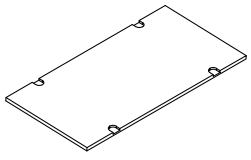 1 pc	

Hardware List

A	B	C	D	E	F
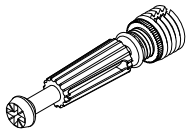 M6x40mm	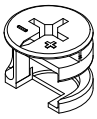 Ø15x12mm	 350 mm	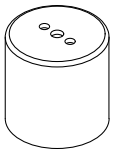	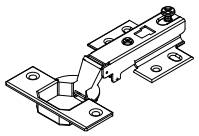	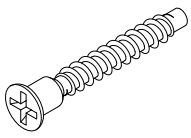 Ø7x38mm
74+2pcs	74+2 pcs	2 sets	5 pcs	2 pcs	4 pcs

G	H	I		J	
		I 1	I 2		
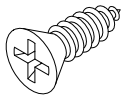 Ø3.5x14mm	 Ø3.5x35 mm	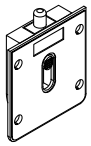	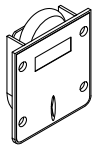	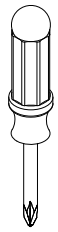	
70+2 pcs	4+1 pcs	4 pcs	4 pcs	1 pc	

Please split component "C" into "C-1" and "C-2" before assembling the slide rail component, and then proceed to the next step of assembly

Step 1

Pull apart component "C" to each side, and then gently push up the lever of component "C-2"

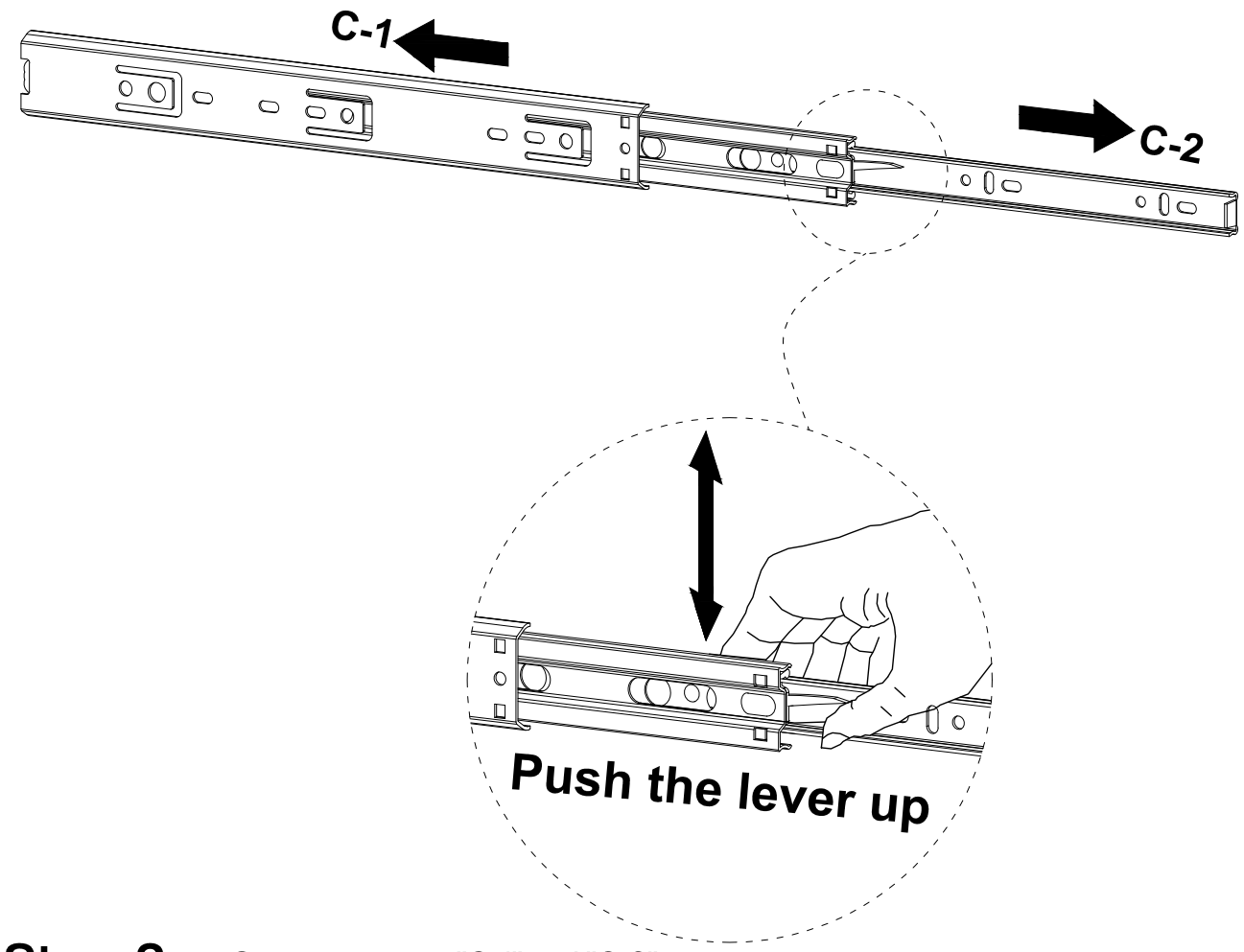

Step 2

Split component "C-1" and "C-2"

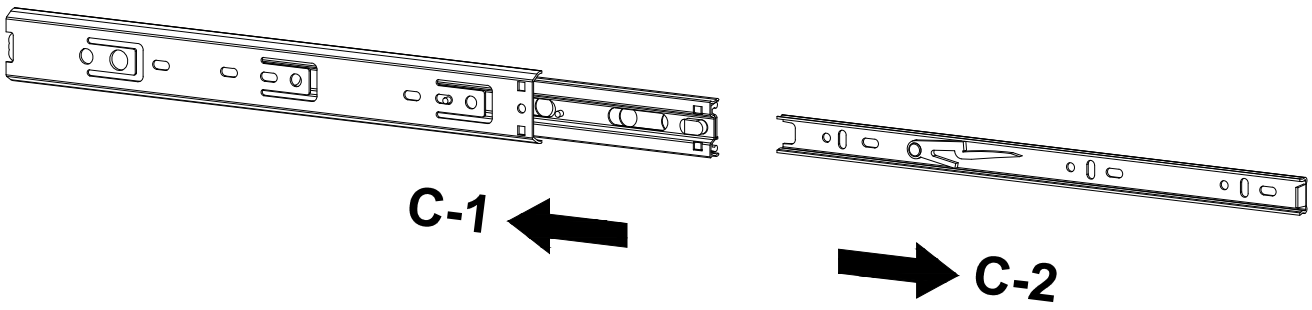

1

A

M6x40mm
8 pcs

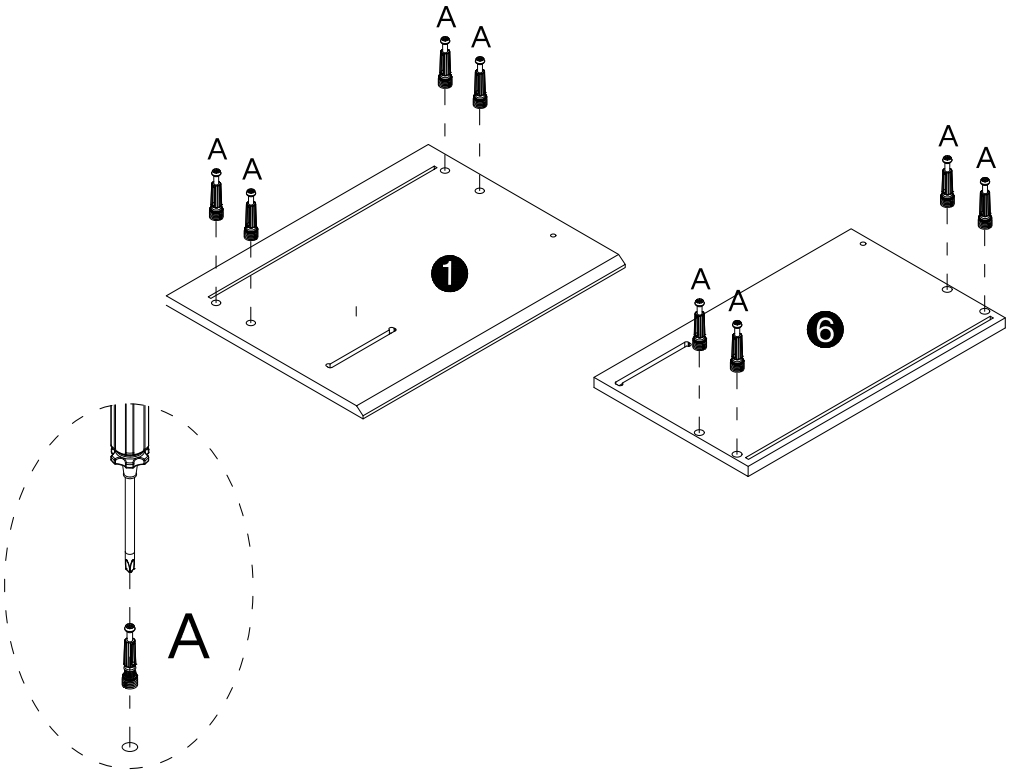

2

B

Ø15X12 mm
4 pcs

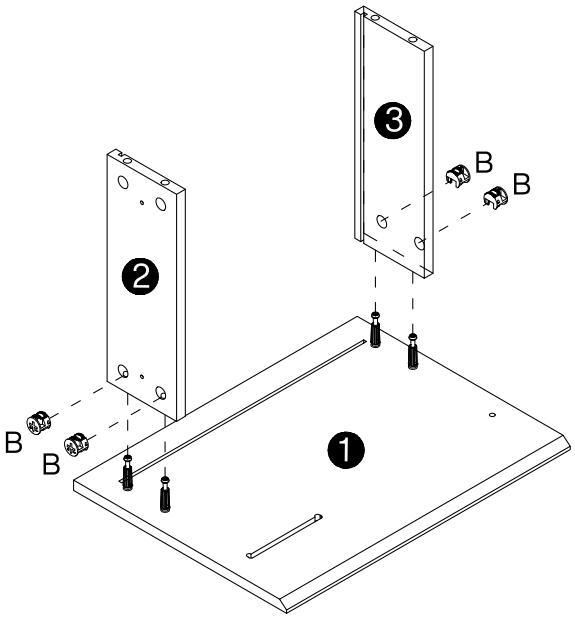

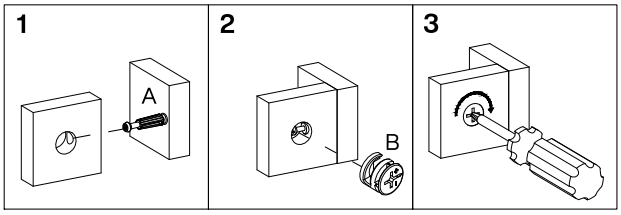

3

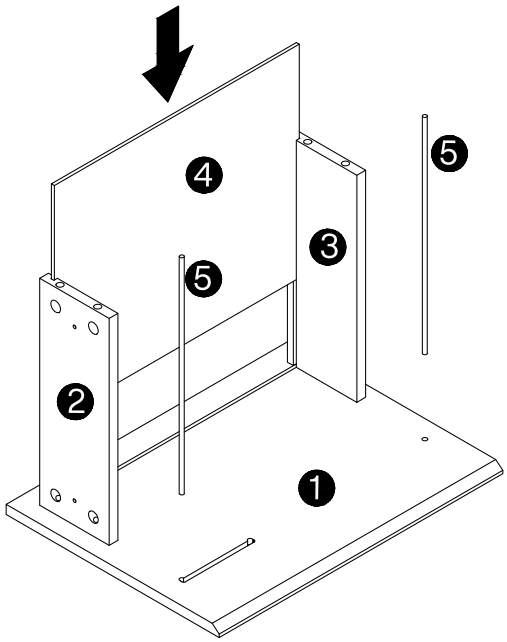

4

B

Ø15X12 mm
4 pcs

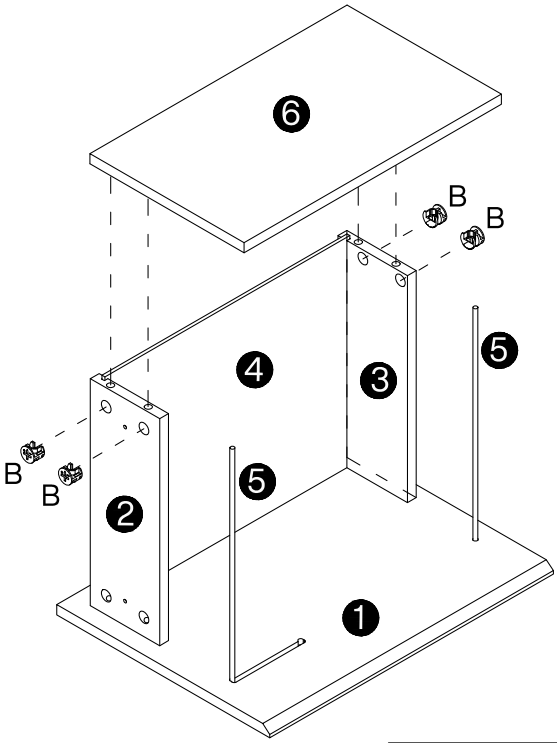

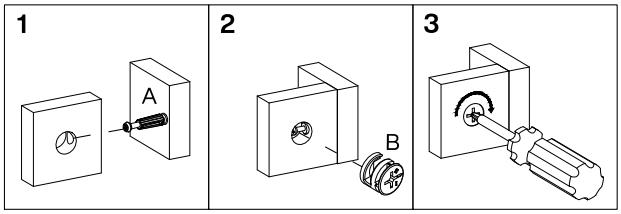

5

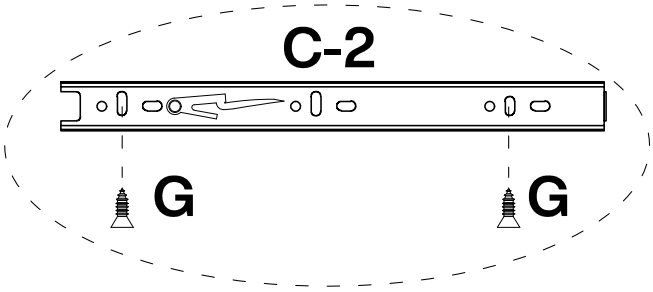

C-2	G
	 Ø3.5x14mm
2 pcs	4 pcs

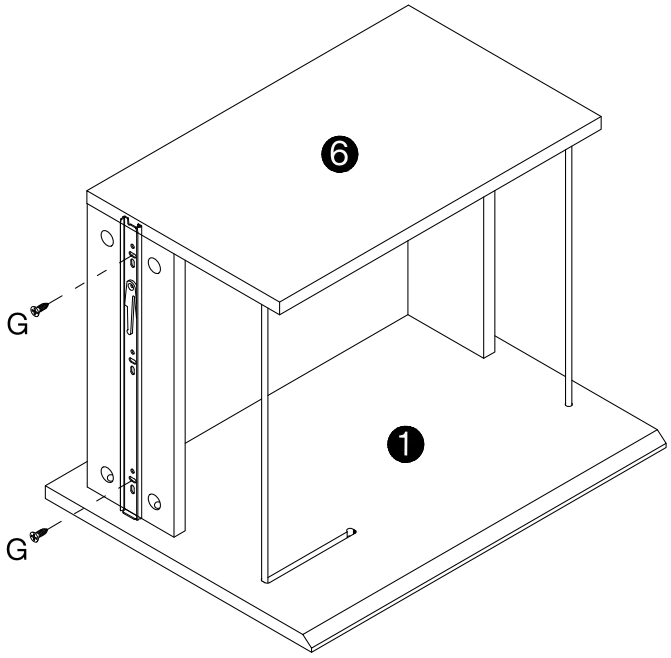

6

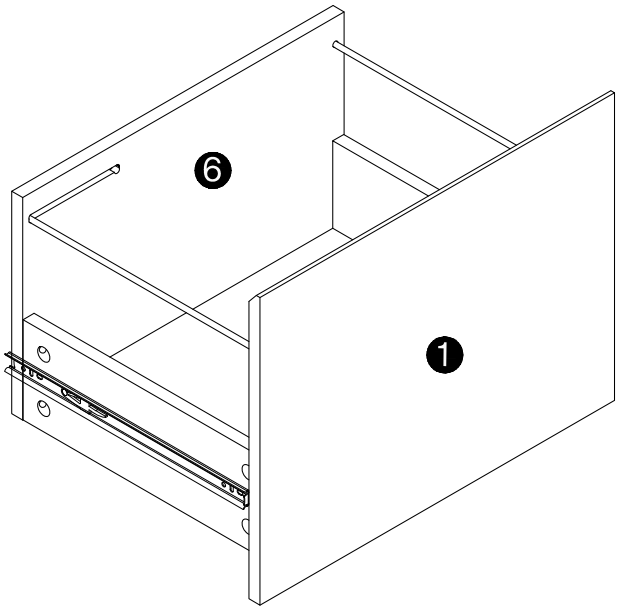

7

A

M6x40mm
4 pcs

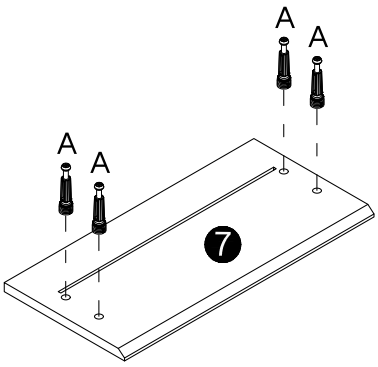

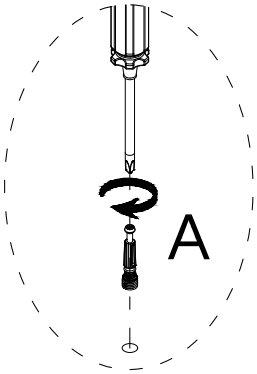

8

B

Ø15X12 mm
4 pcs

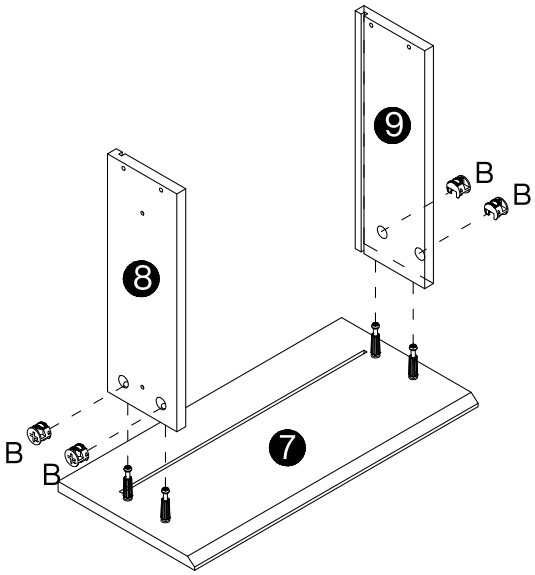

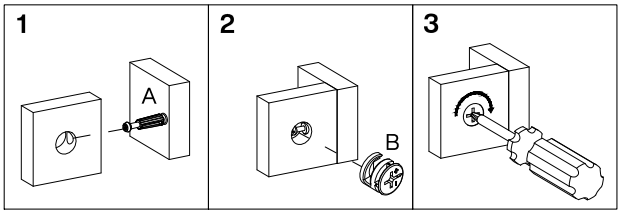

9

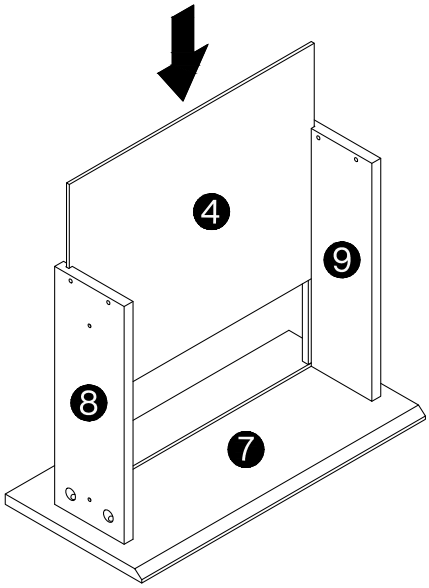

10

H

Ø3.5x35mm
4 pcs

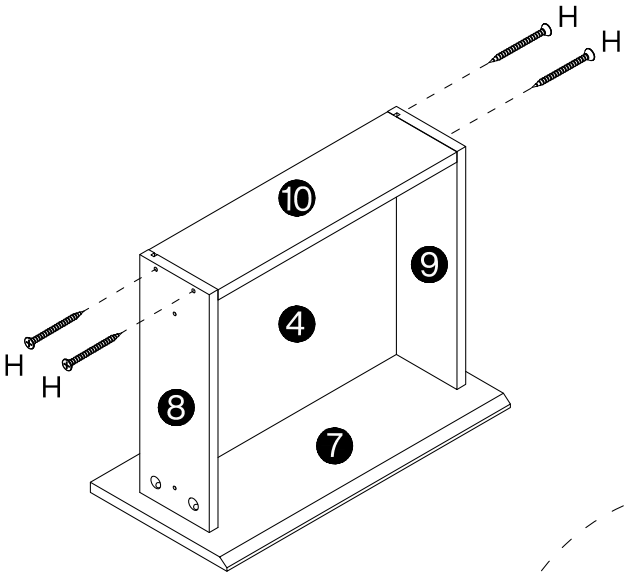

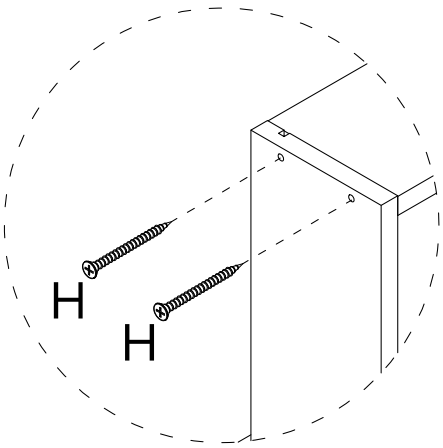

11

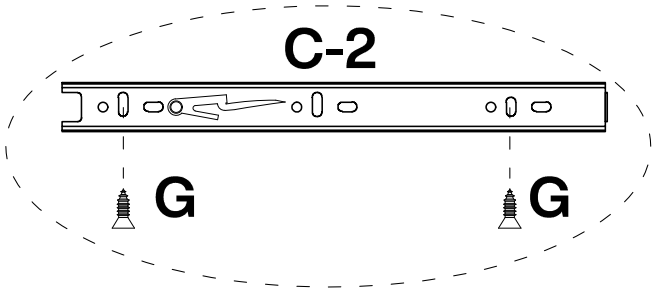

C-2	G
	 Ø3.5x14mm
2 pcs	4 pcs

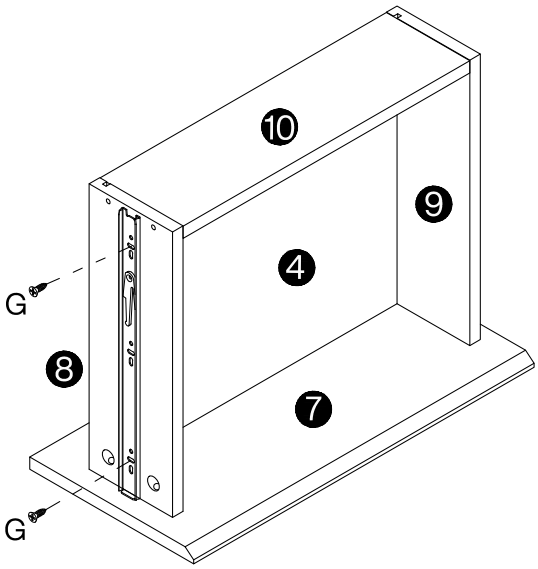

12

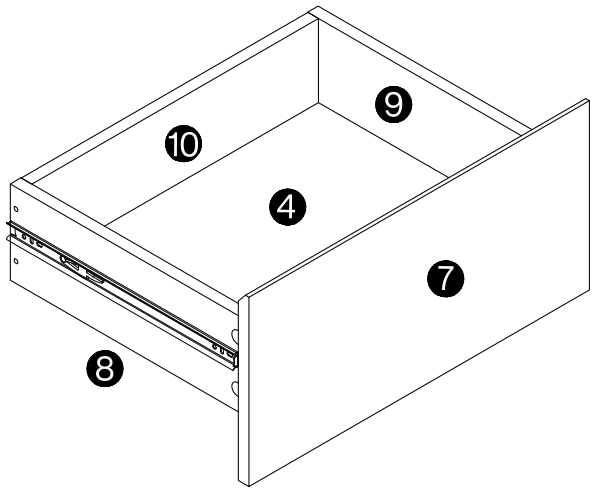

13

D	G
	 M3.5x14mm
5 pcs	10 pcs

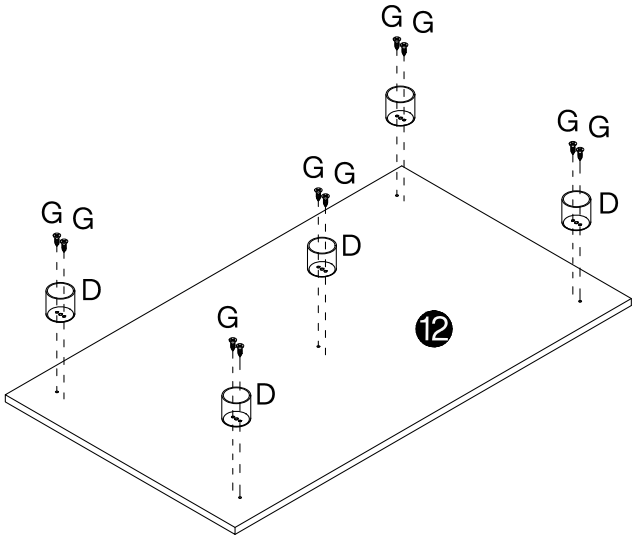

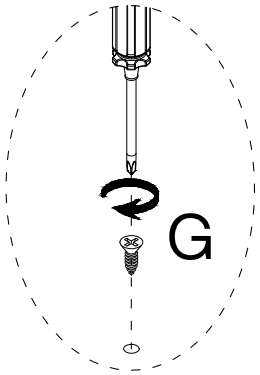

14

A
 M6x40mm
8 pcs

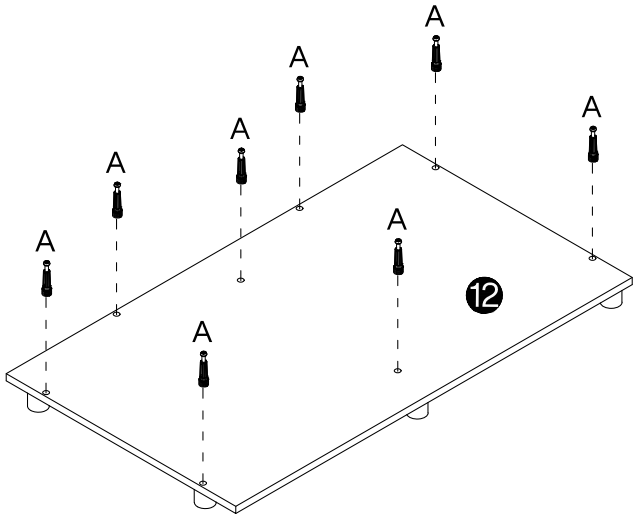

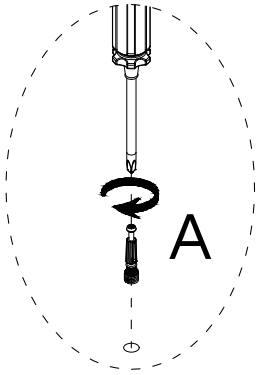

15

A
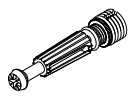
M6x40mm
5 pcs

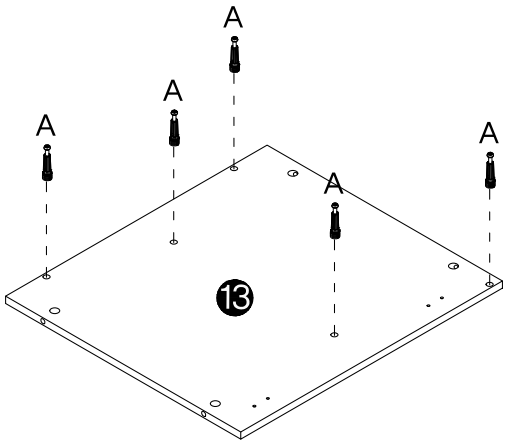

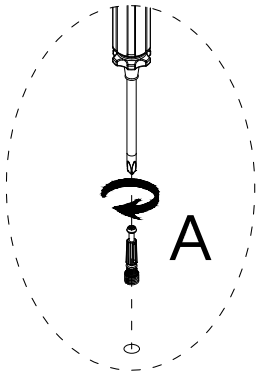

16

A
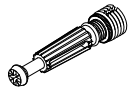
M6x40mm
2 pcs

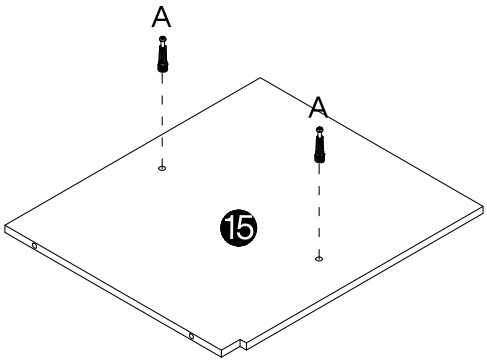

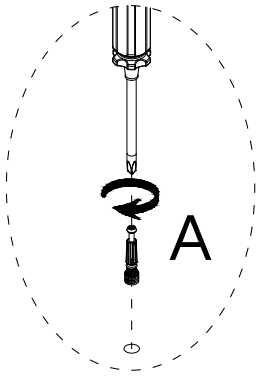

17

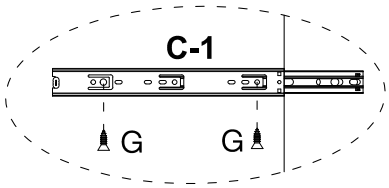

C-1	G	A
	 M3.5x14mm	 M6x40mm
2 pcs	4 pcs	2 pcs

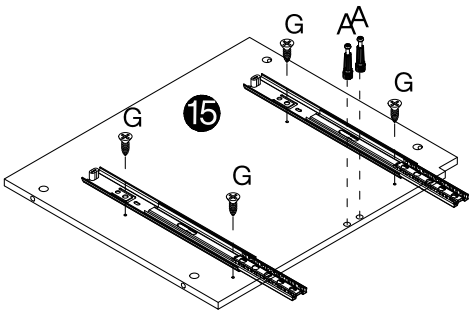

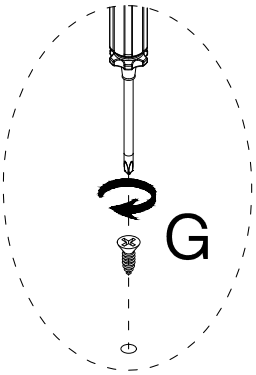

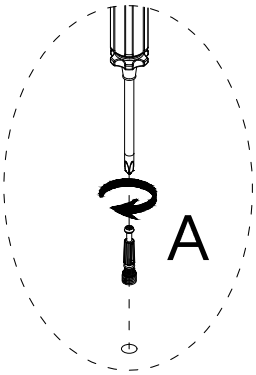

18

B
 Ø15X12 mm
4 pcs

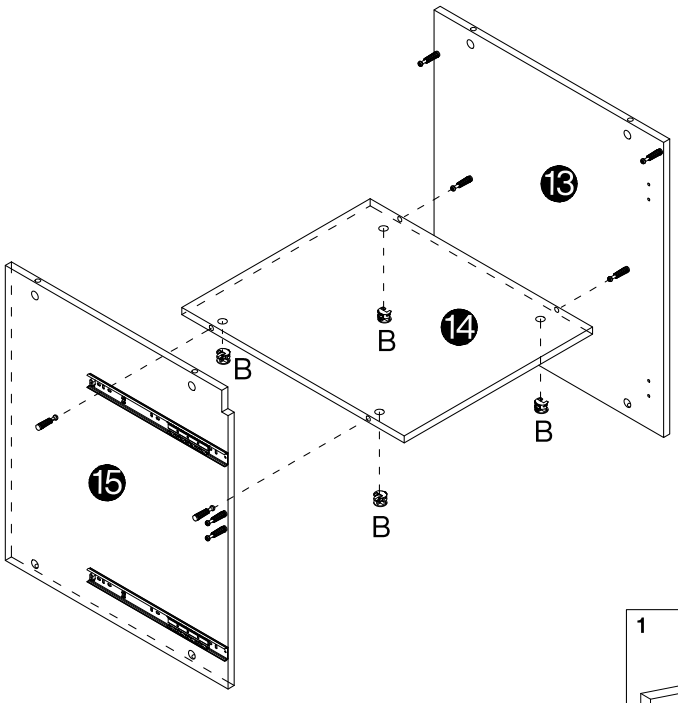

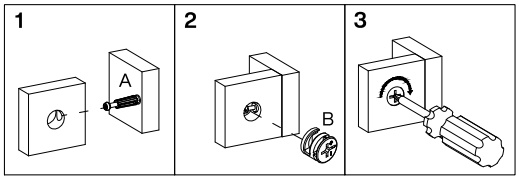

19

B

Ø15X12 mm
2 pcs

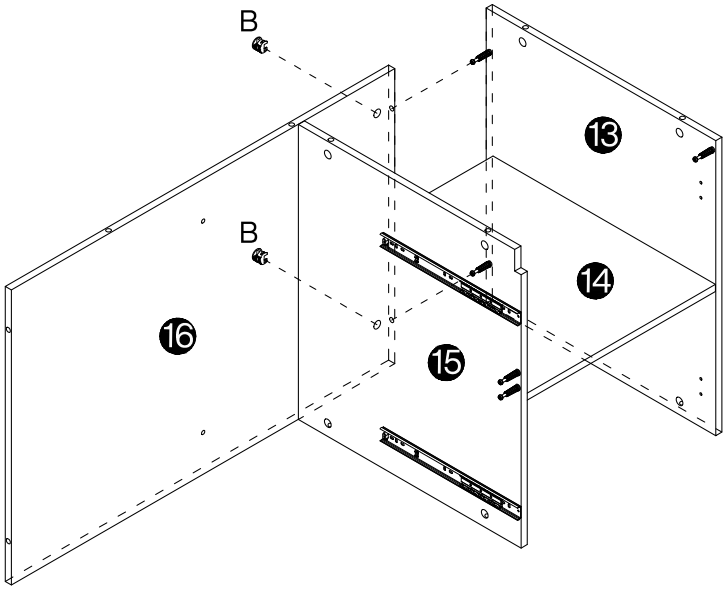

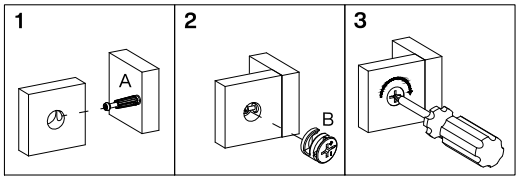

20

F

Ø7X38 mm
2 pcs

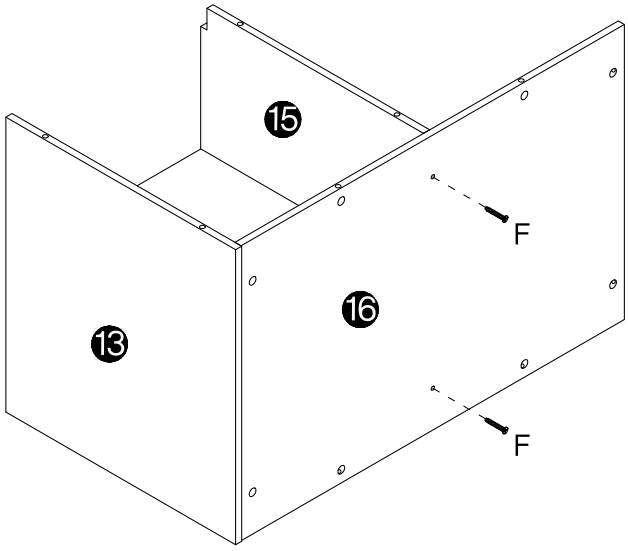

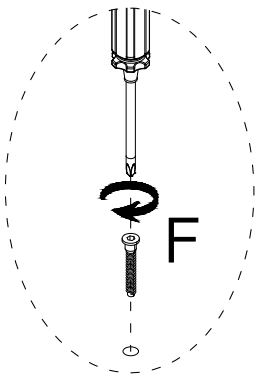

21

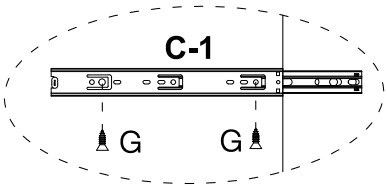

C-1	G	A
	 M3.5x14mm	 M6x40mm
2 pcs	4 pcs	5 pcs

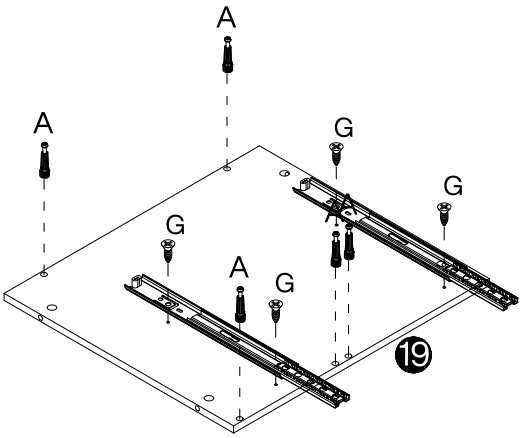

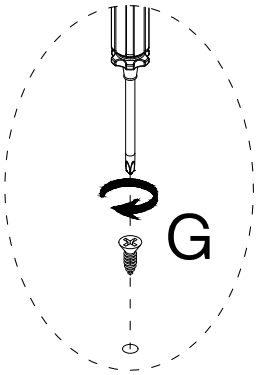

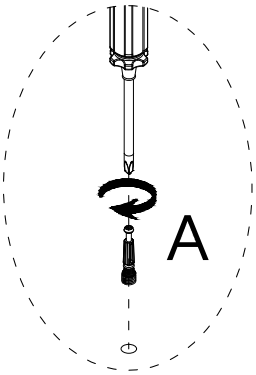

22

B
 Ø15X12 mm
8 pcs

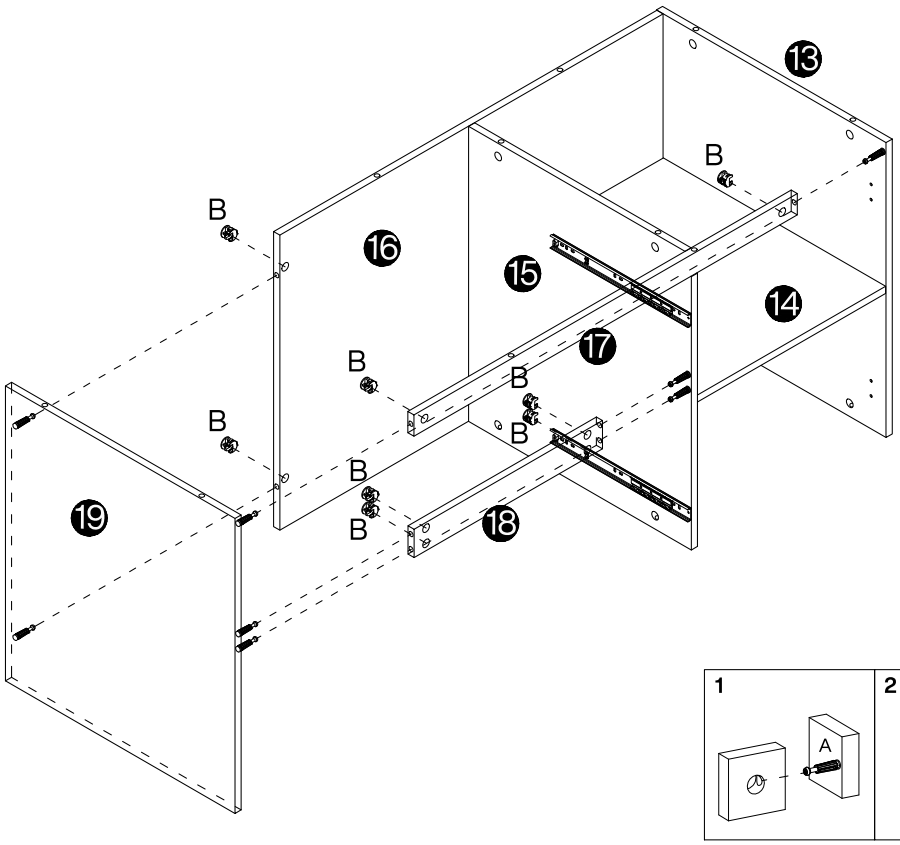

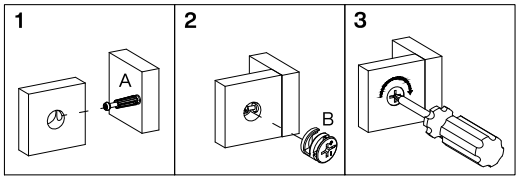

23

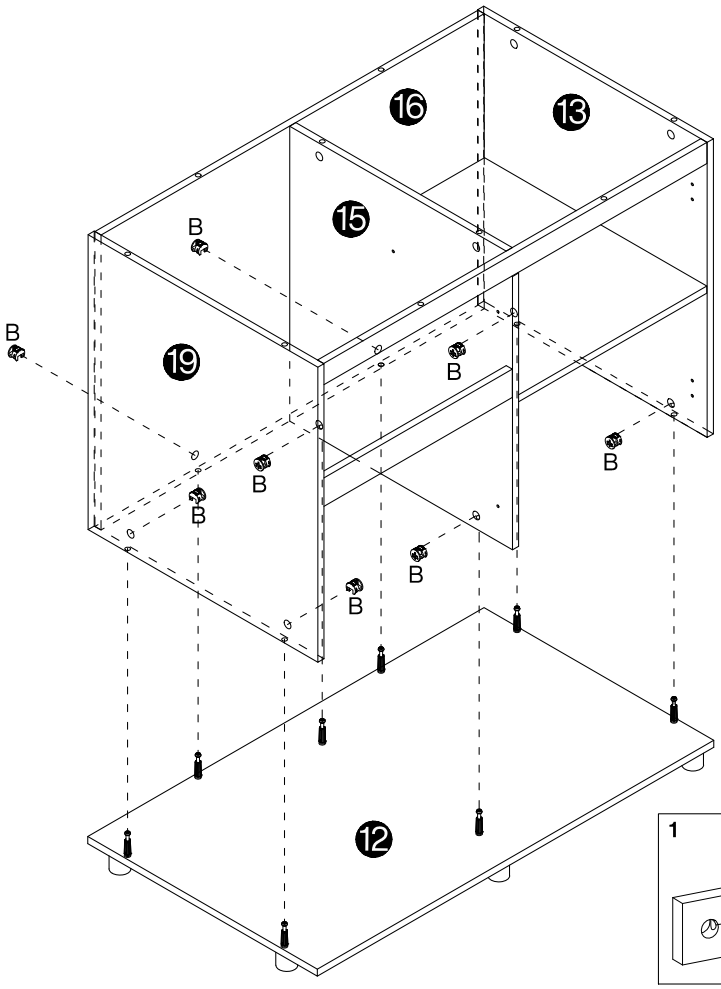

B

Ø15X12 mm
8 pcs

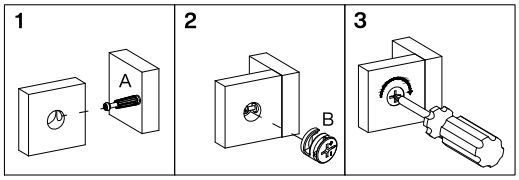

24

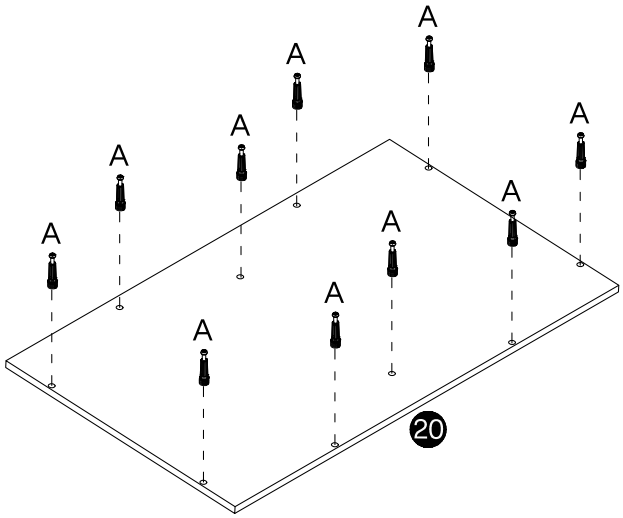

A

M6x40mm
10 pcs

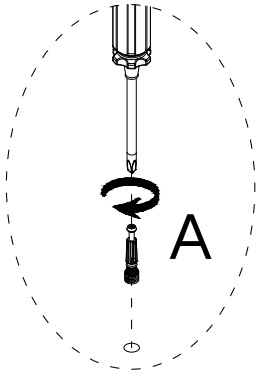

25

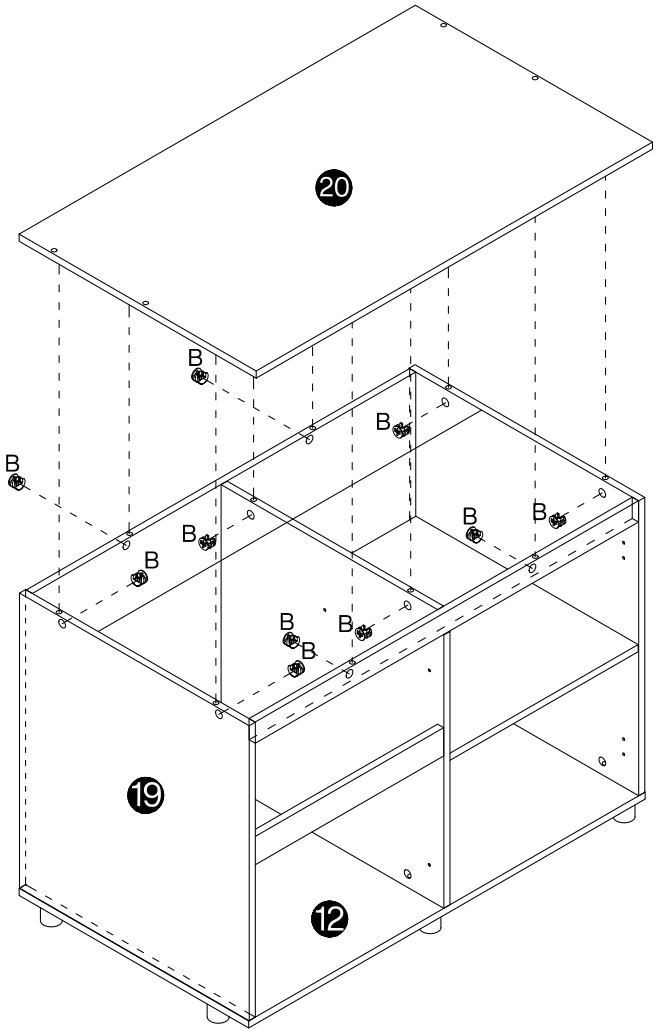

B

Ø15X12 mm
10 pcs

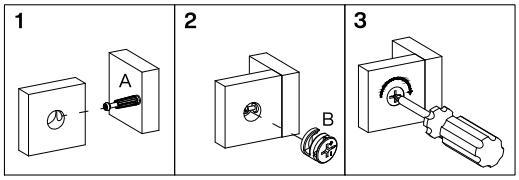

26

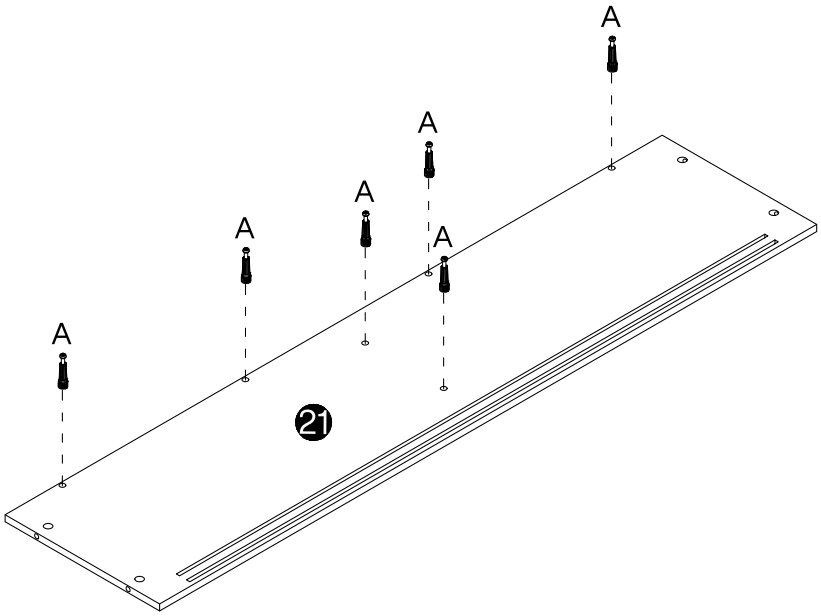

A

M6x40mm
6 pcs

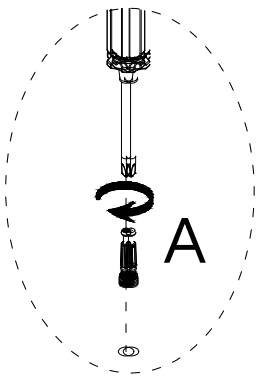

27

B

Ø15X12 mm
2 pcs

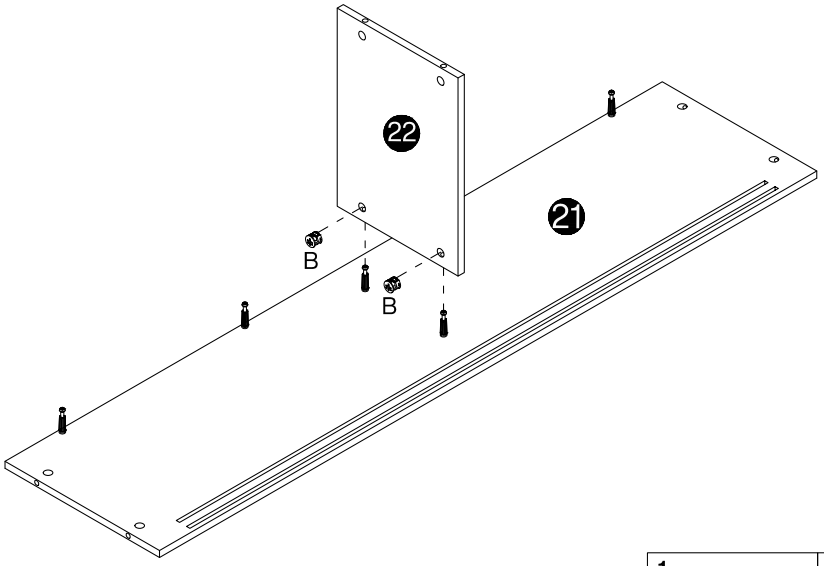

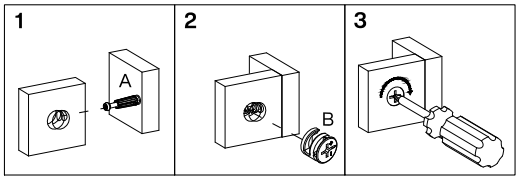

28

B

Ø15X12 mm
4 pcs

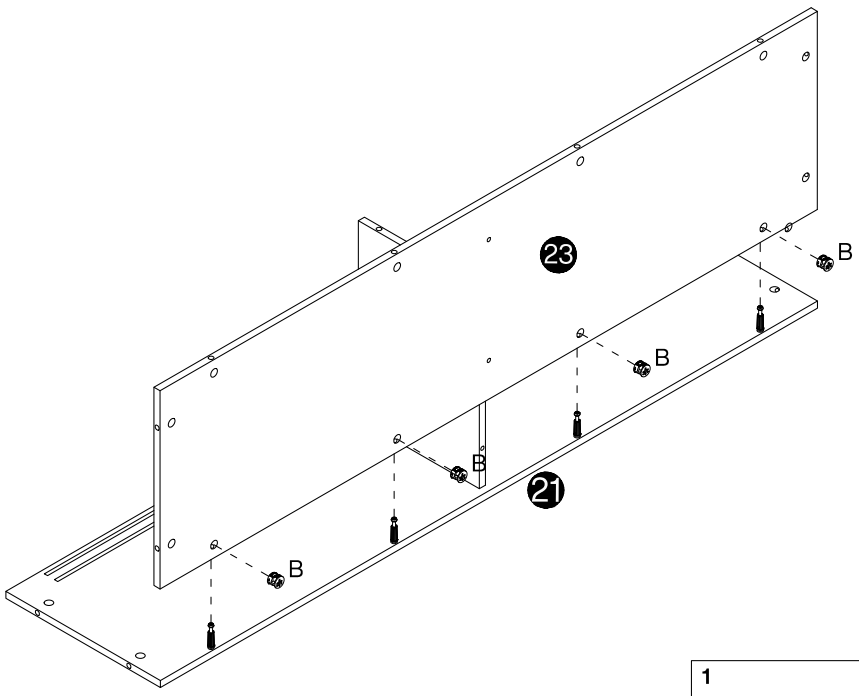

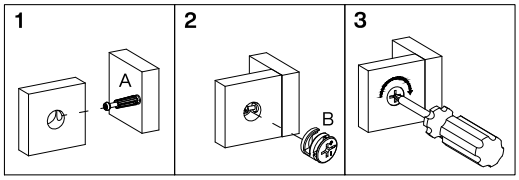

29

F

Ø7X38 mm
2 pcs

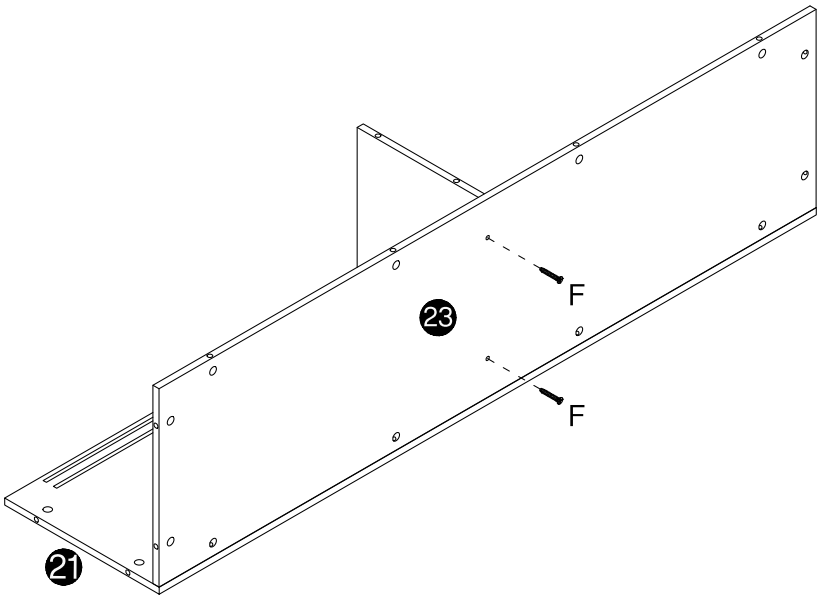

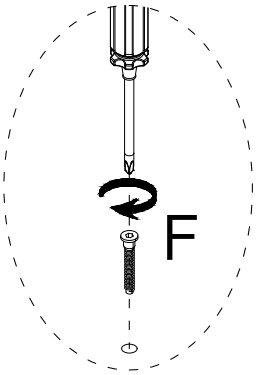

30

A

M6x40mm
8 pcs

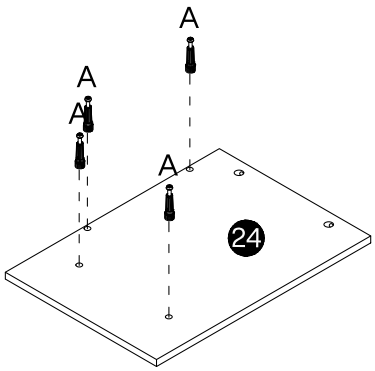

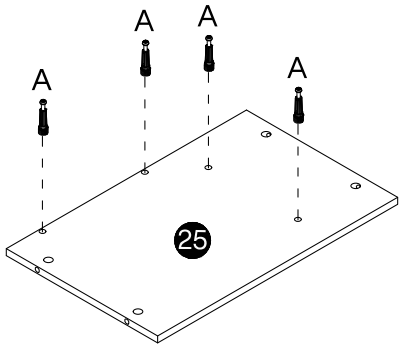

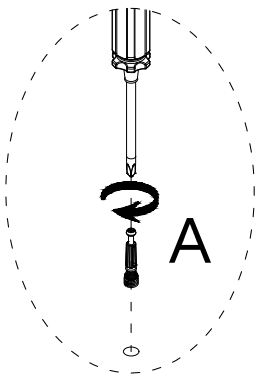

31

B

Ø15X12 mm
4 pcs

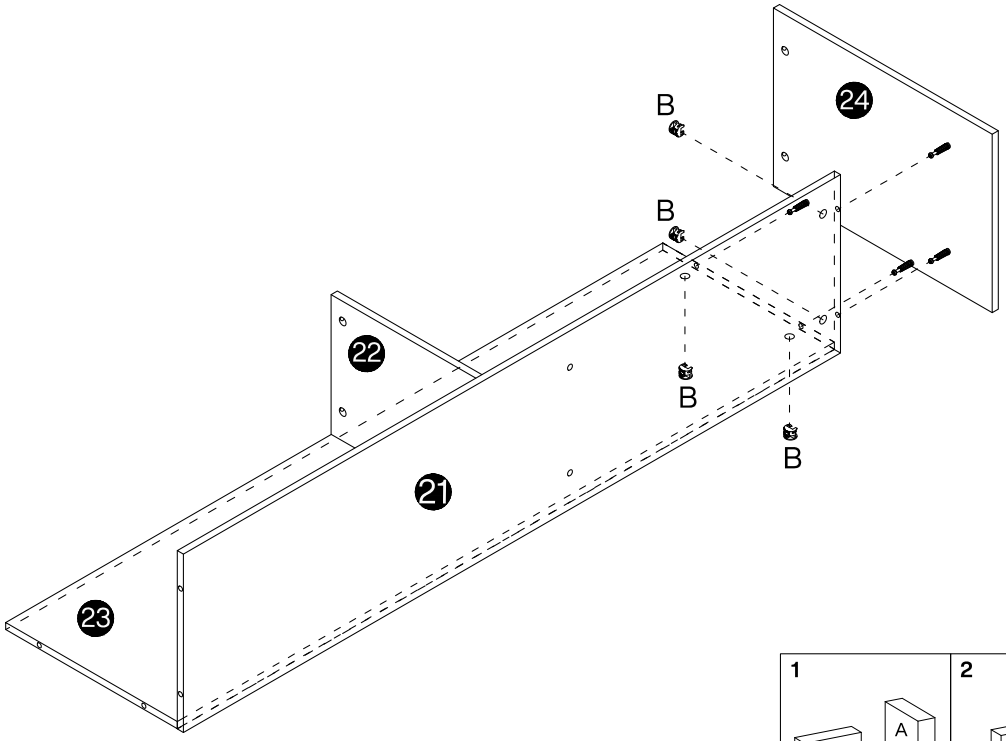

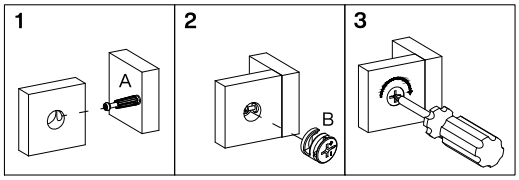

32

B

Ø15X12 mm
4 pcs

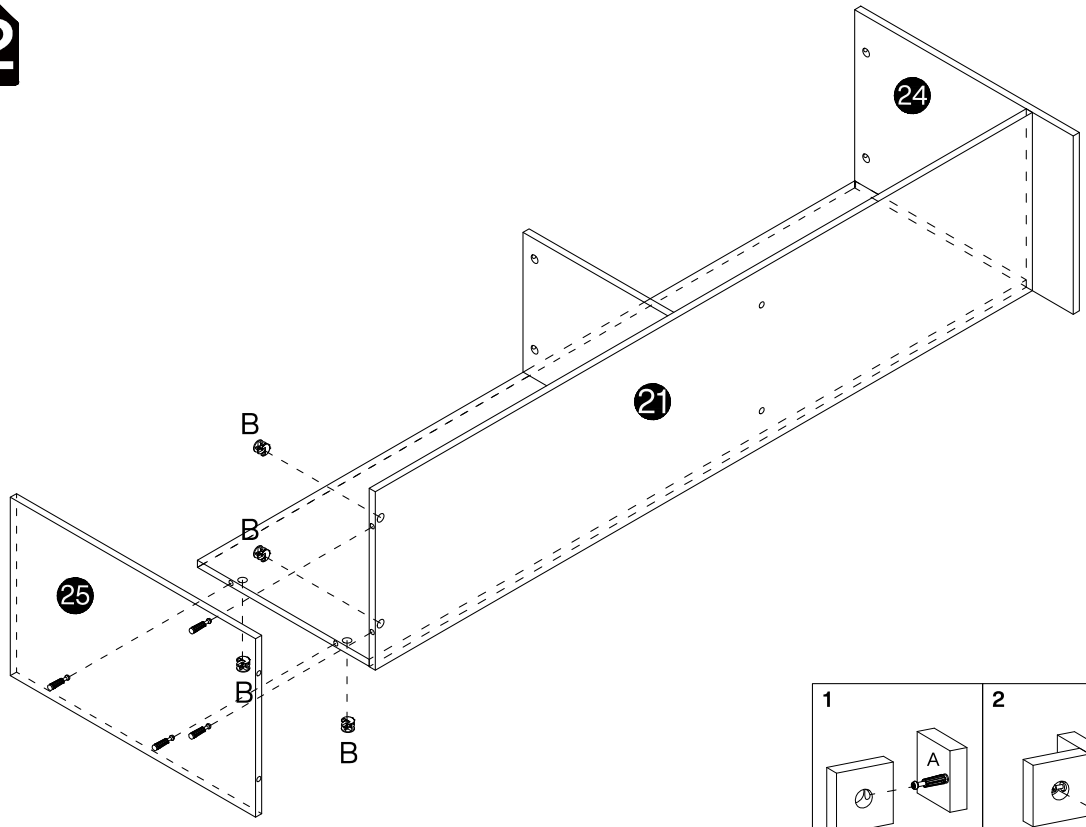

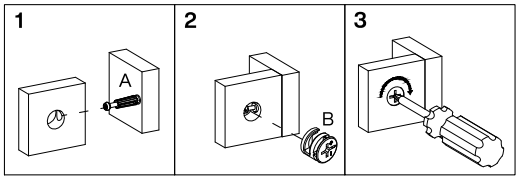

33

A
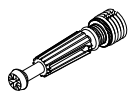
M6x40mm
2 pcs

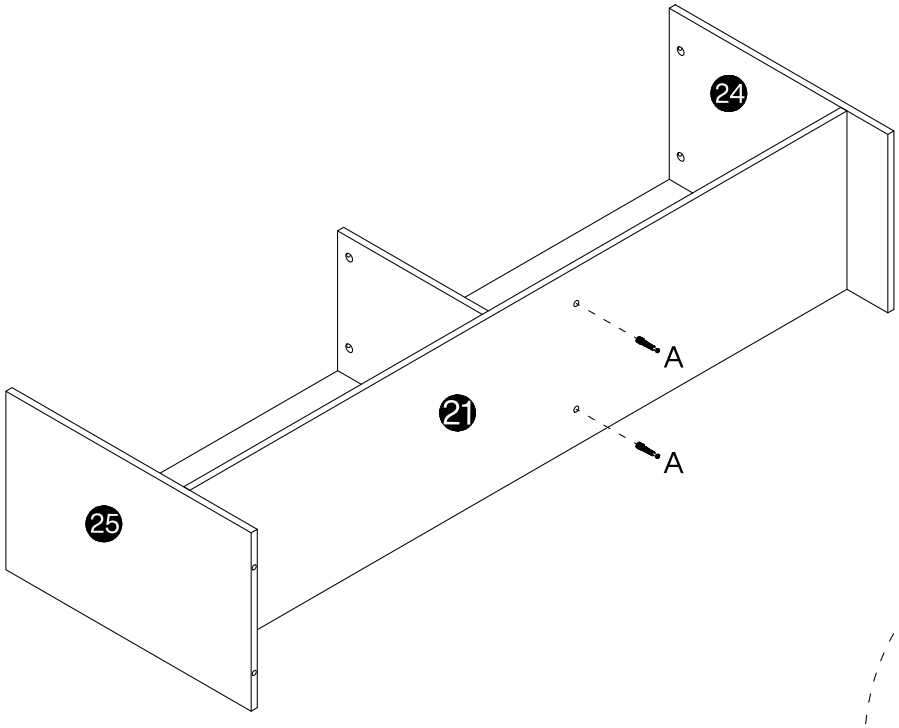

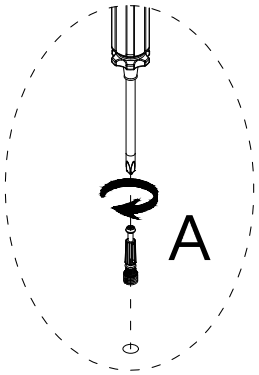

34

B

Ø15X12 mm
2 pcs

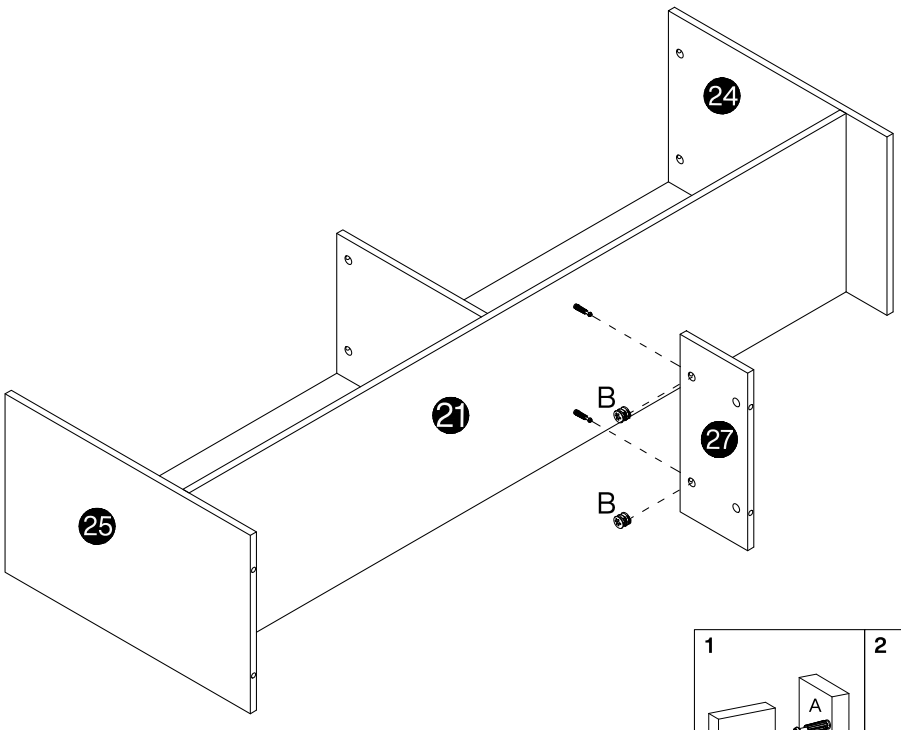

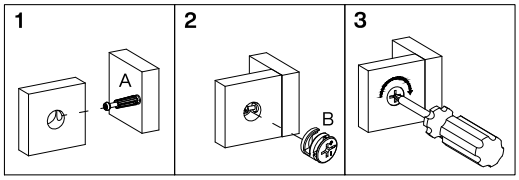

35

A
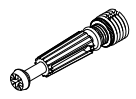
M6x40mm
10 pcs

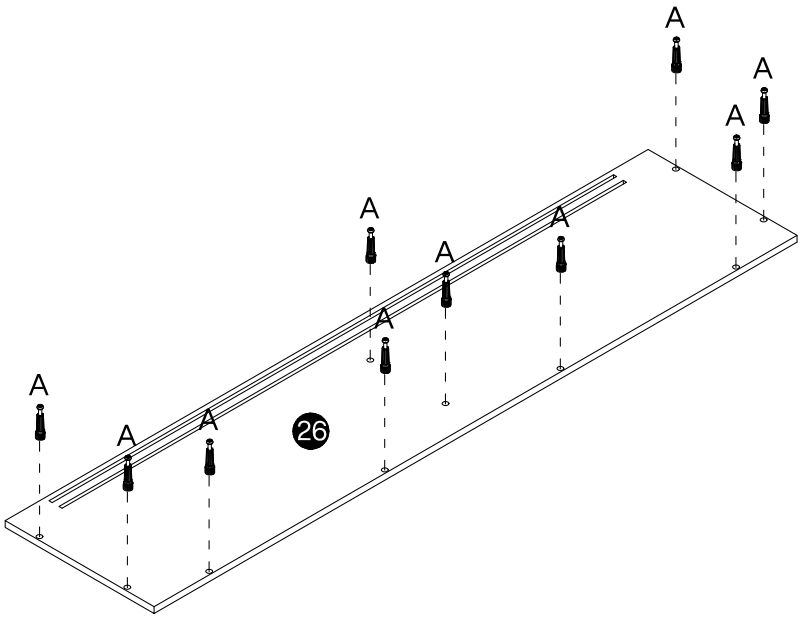

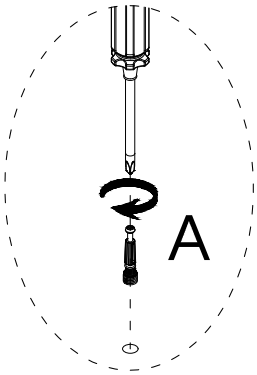

36

B

Ø15X12 mm
10 pcs

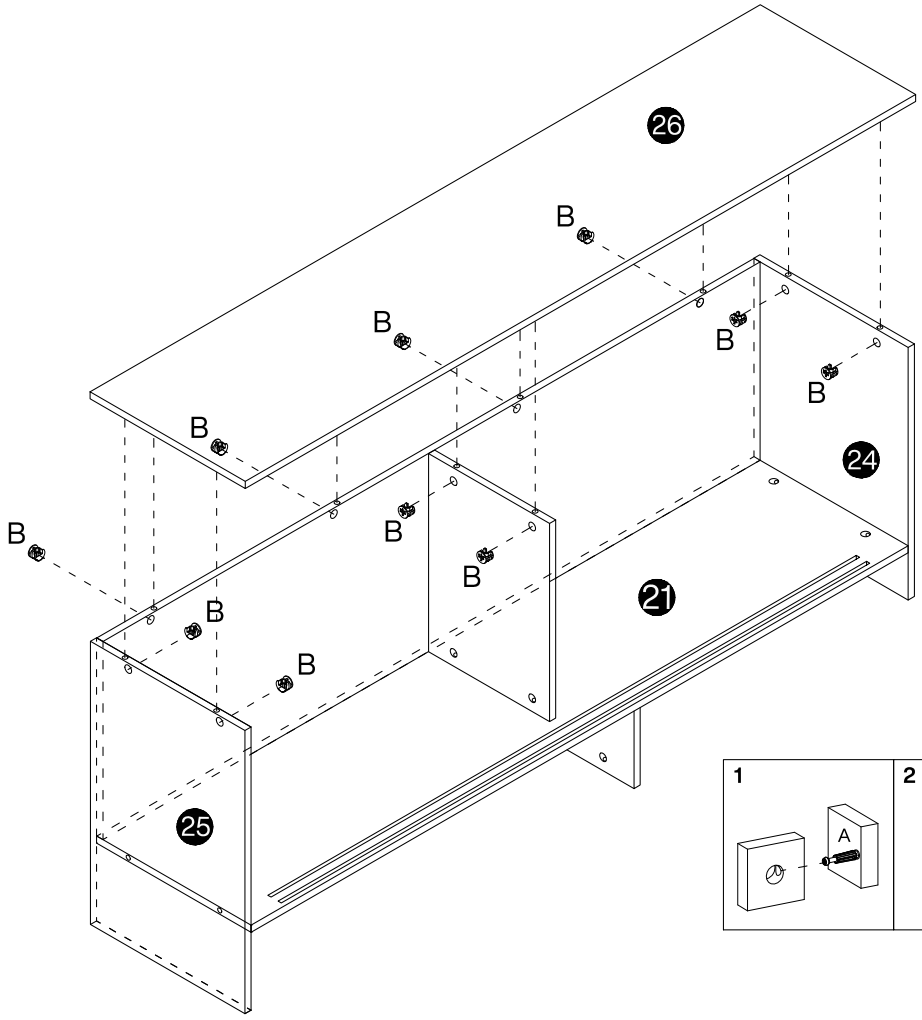

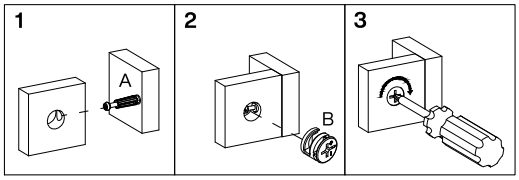

I1	I2	G
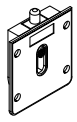	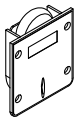	 M3.5x14mm
4 pcs	4 pcs	32 pcs

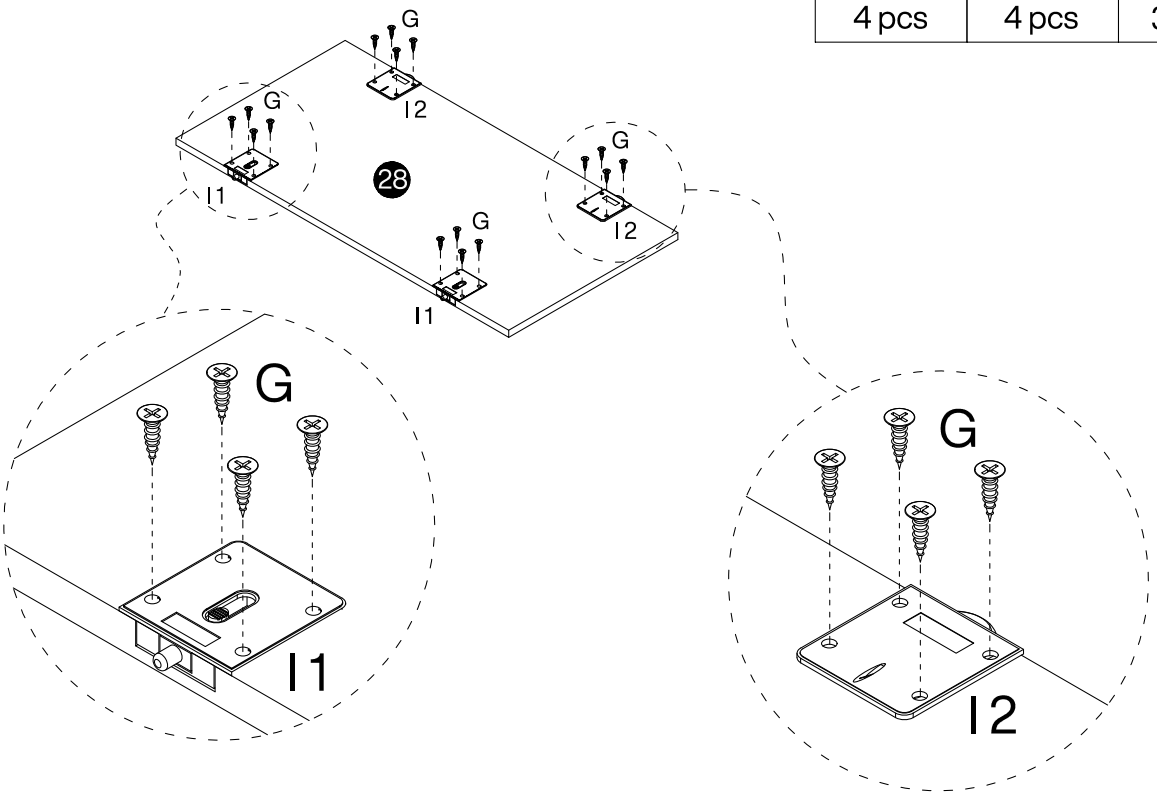

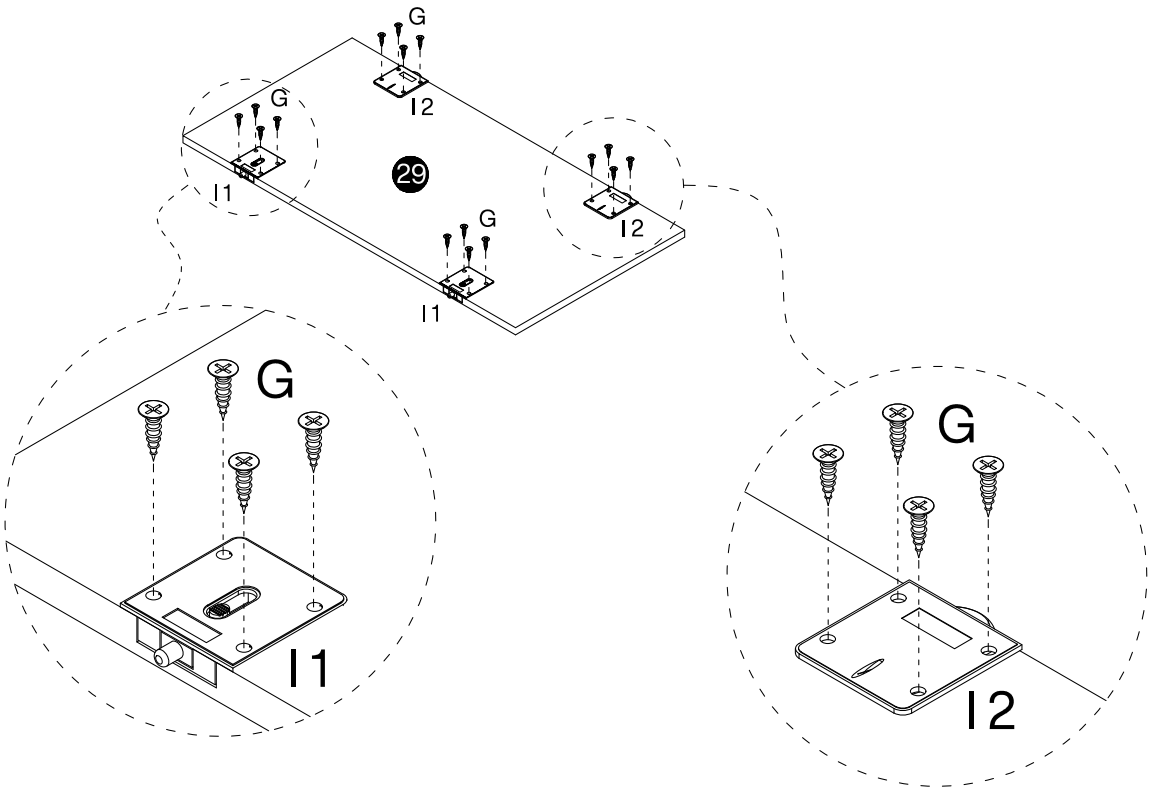

38

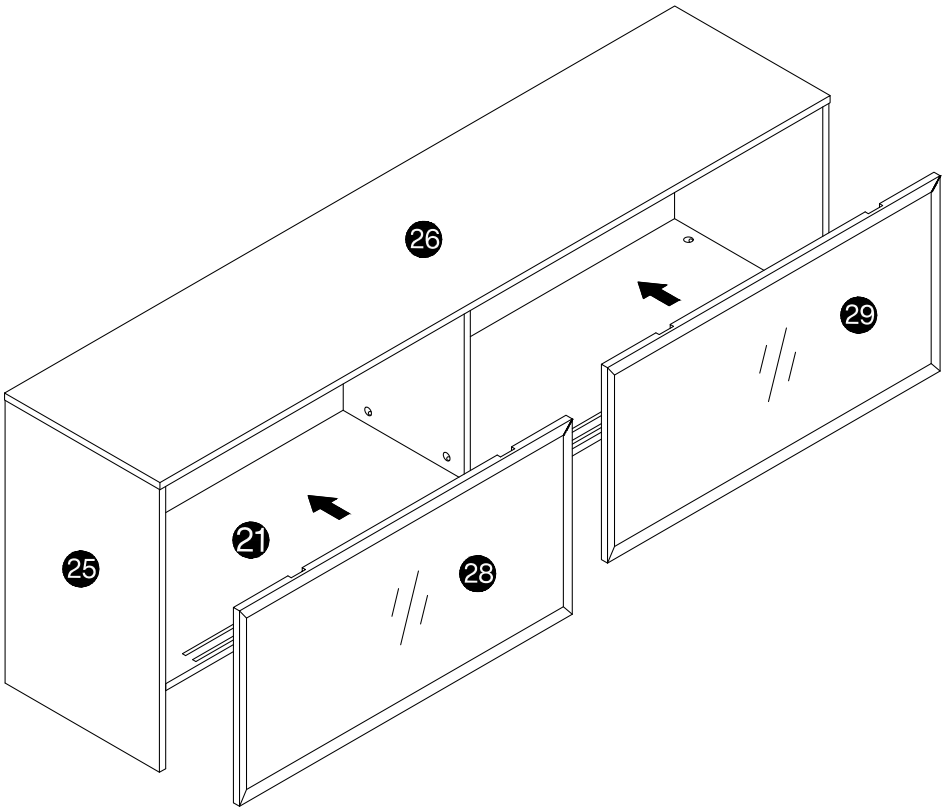

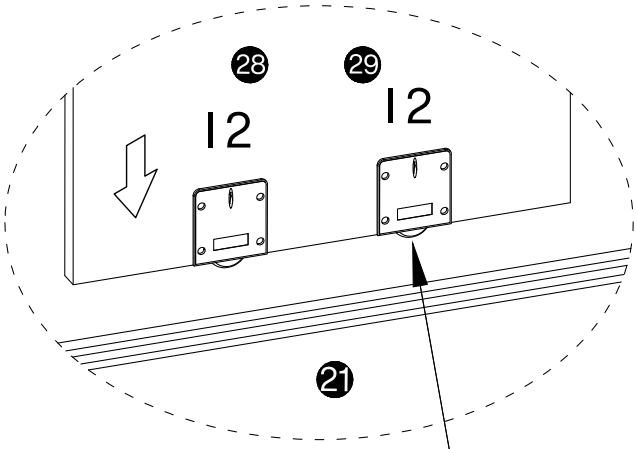

Step 1

Align the wheels of the I2 door wheel with the slot on the board and place it down

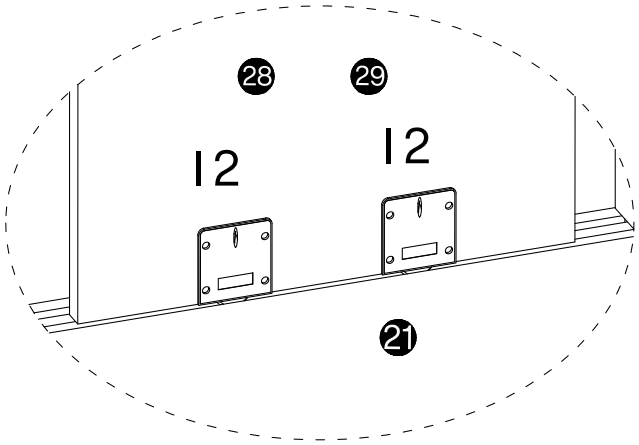

Step 2

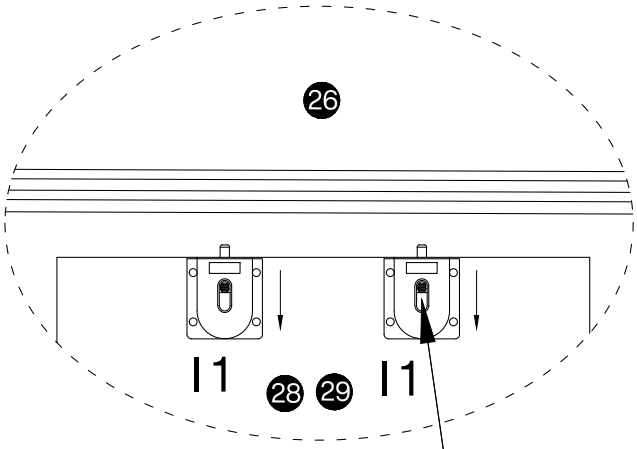

Step 3

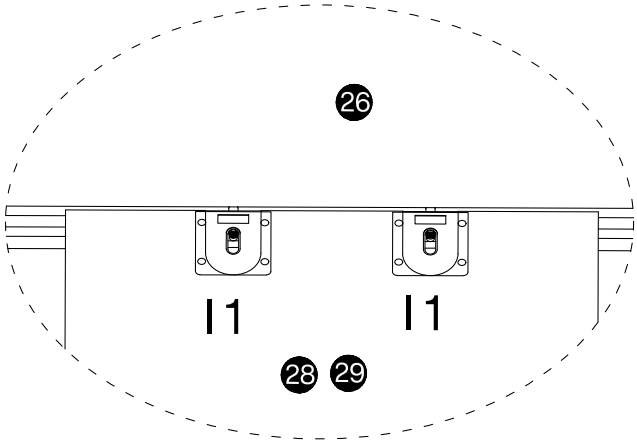

Step 4

Press down on the I1 door wheel switch, and release the hand after the card head on top enters the slot on the board

39

1

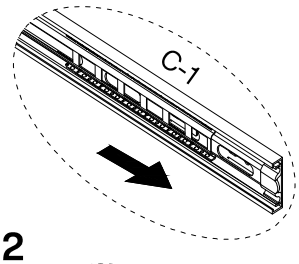

2

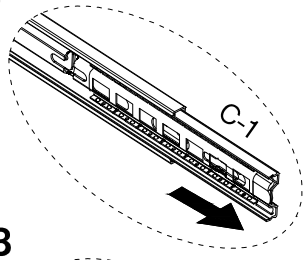

3

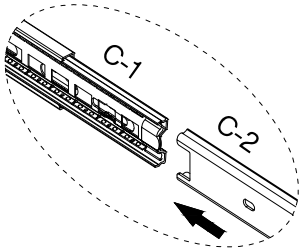

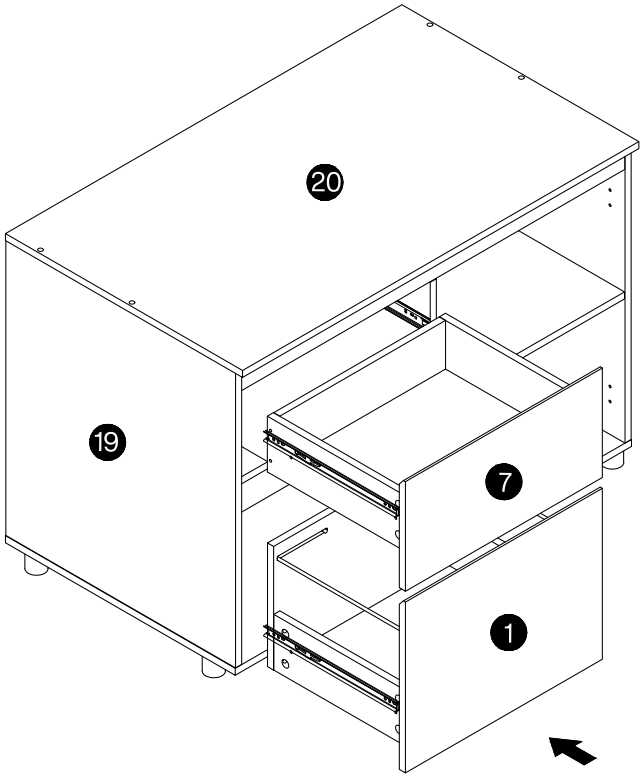

Align the "C-2" with the "C-1" guideway and gently push it in to complete the assembly

40

E	G
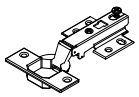	 M3.5x14mm
2 pcs	4 pcs

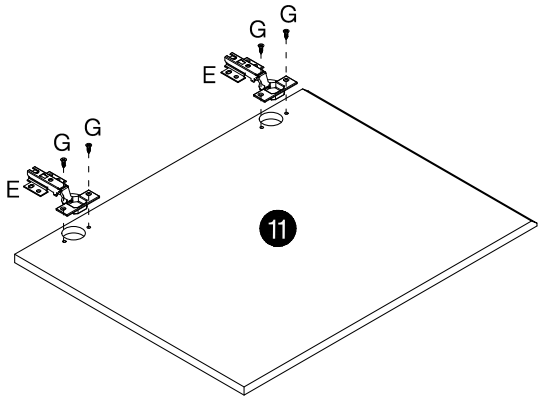

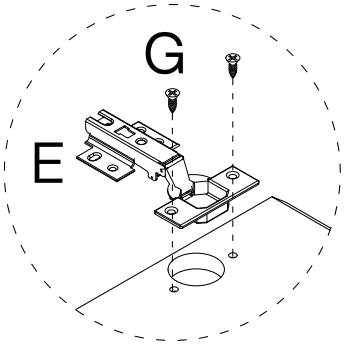

41

A
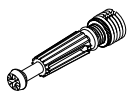
M6x40mm
4 pcs

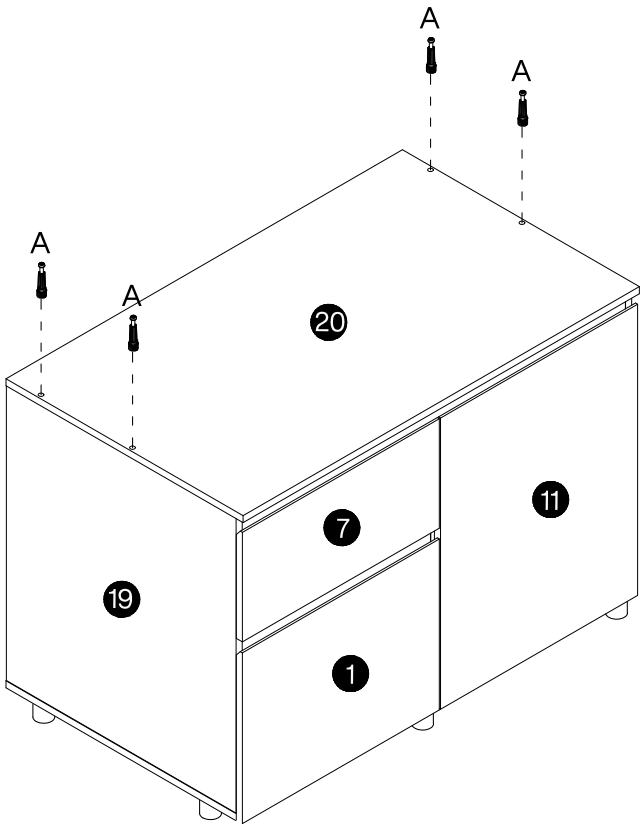

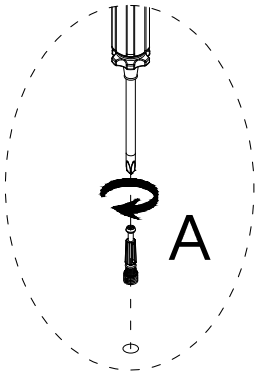

42

G

M3.5x14mm
8 pcs

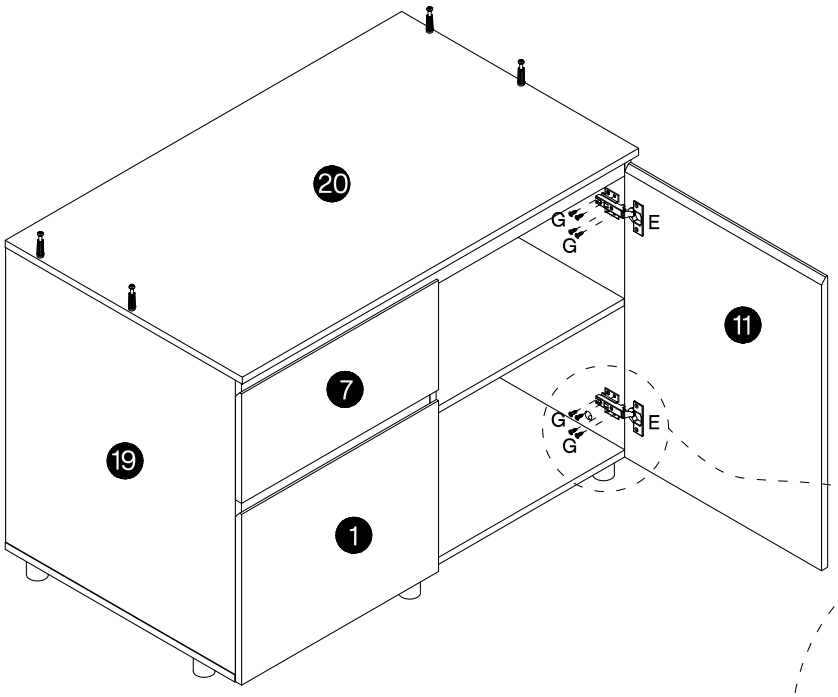

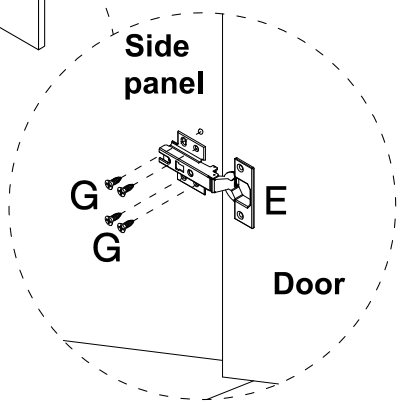

To prevent the door hinge from falling off,please install 4 screws

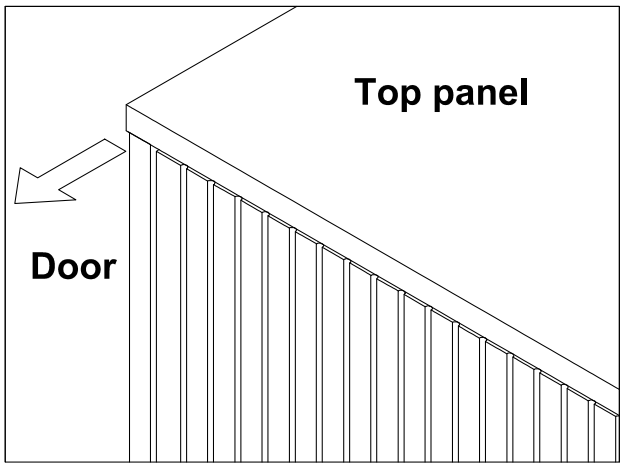

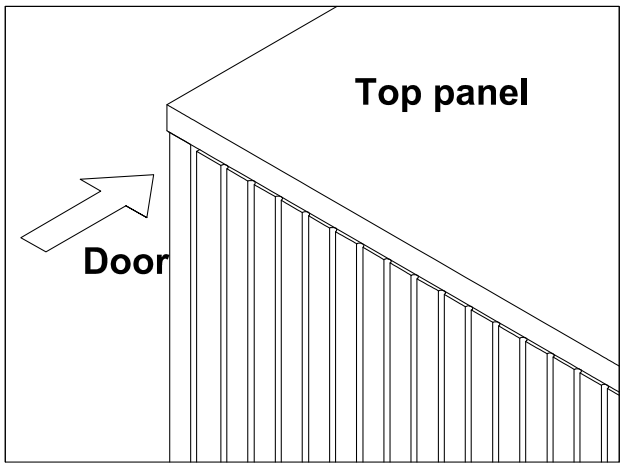

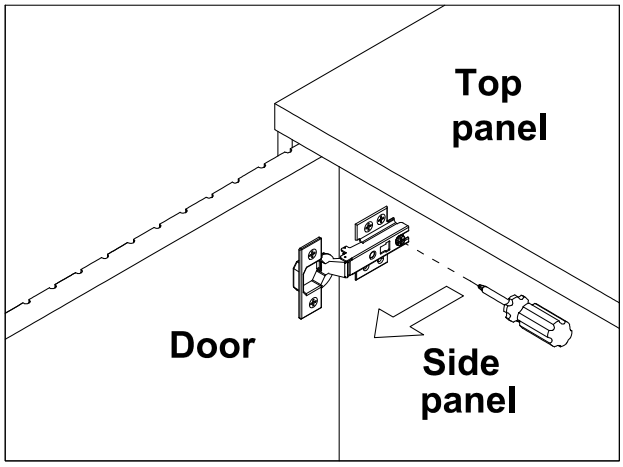

Pull the hinge forward a little.

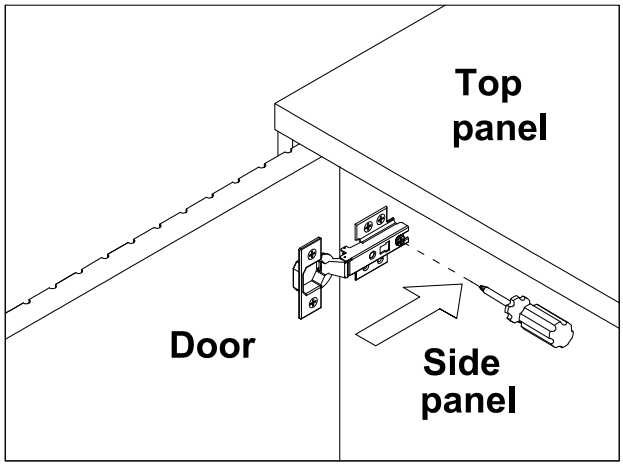

Push the hinge back a little.

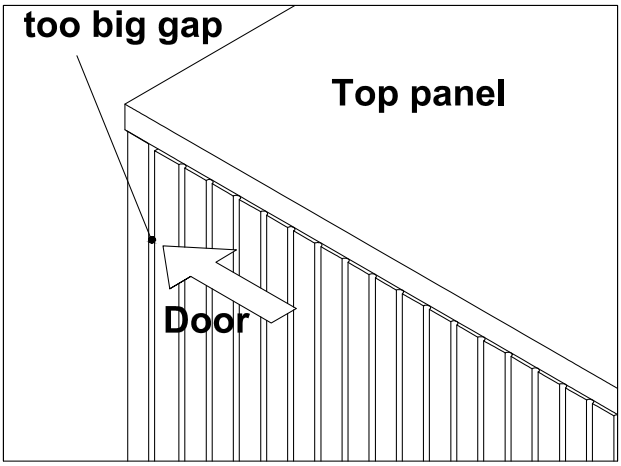

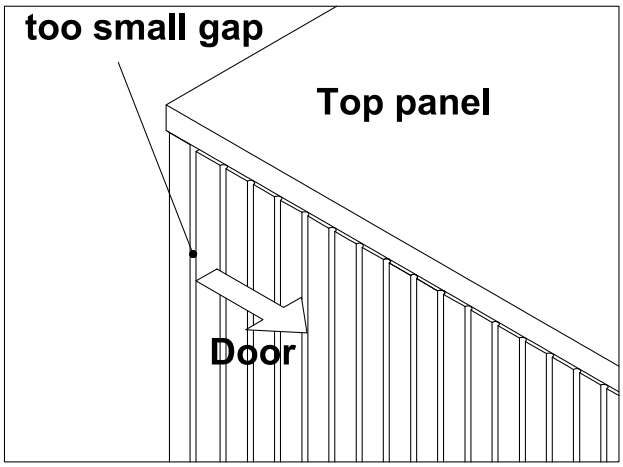

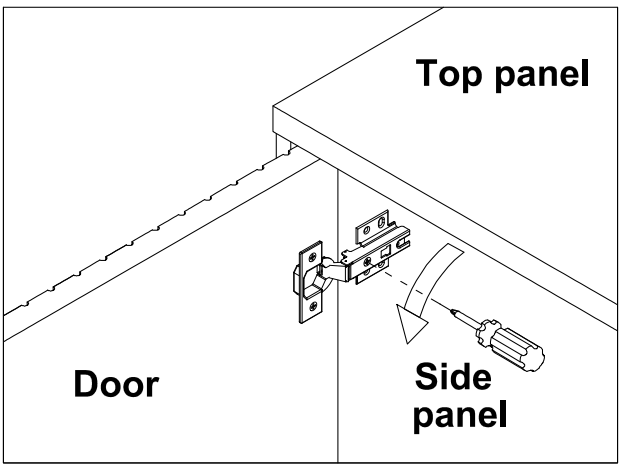

Turn the screw clockwise a little as shown to make the gap smaller

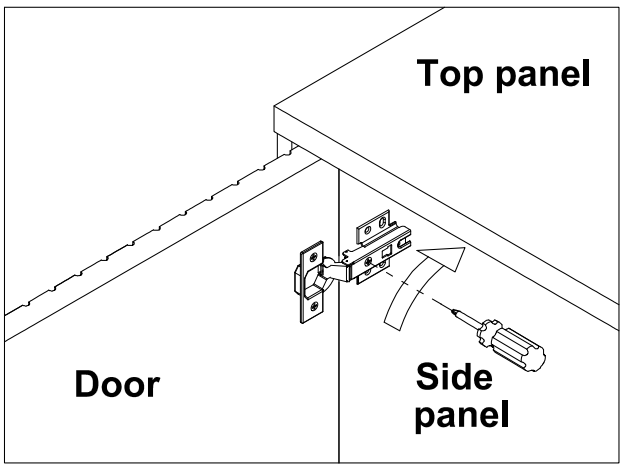

Turn the screw counterclockwise a little as shown to make the gap bigger

43

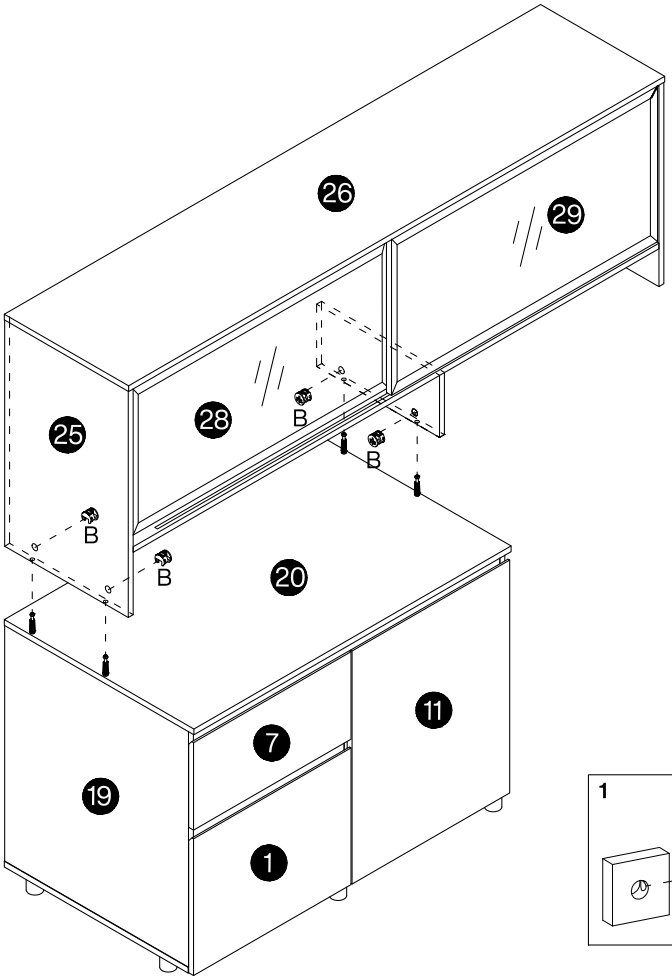

B

Ø15X12 mm
4 pcs

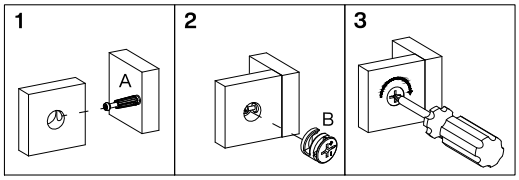

44

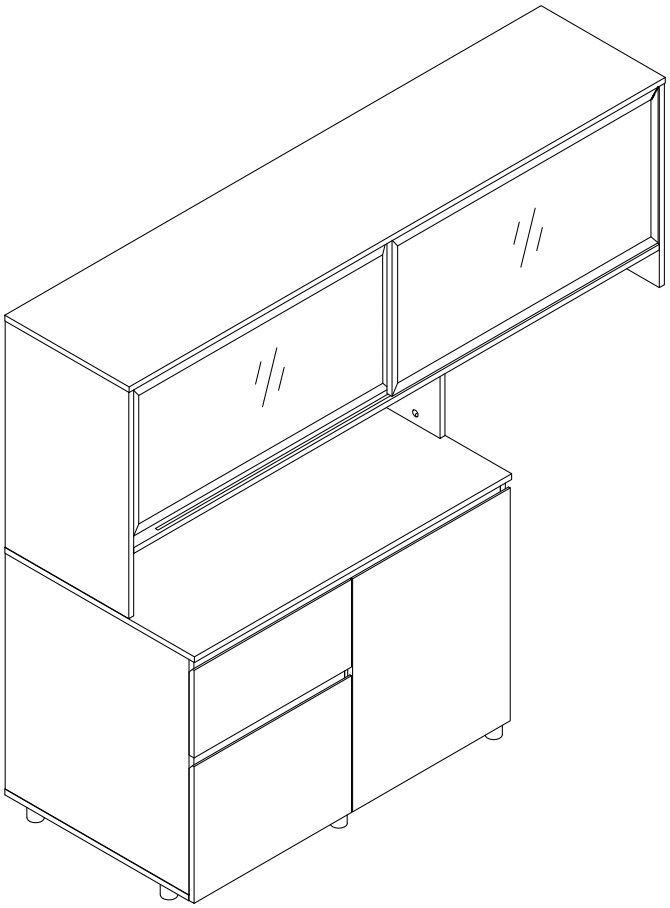

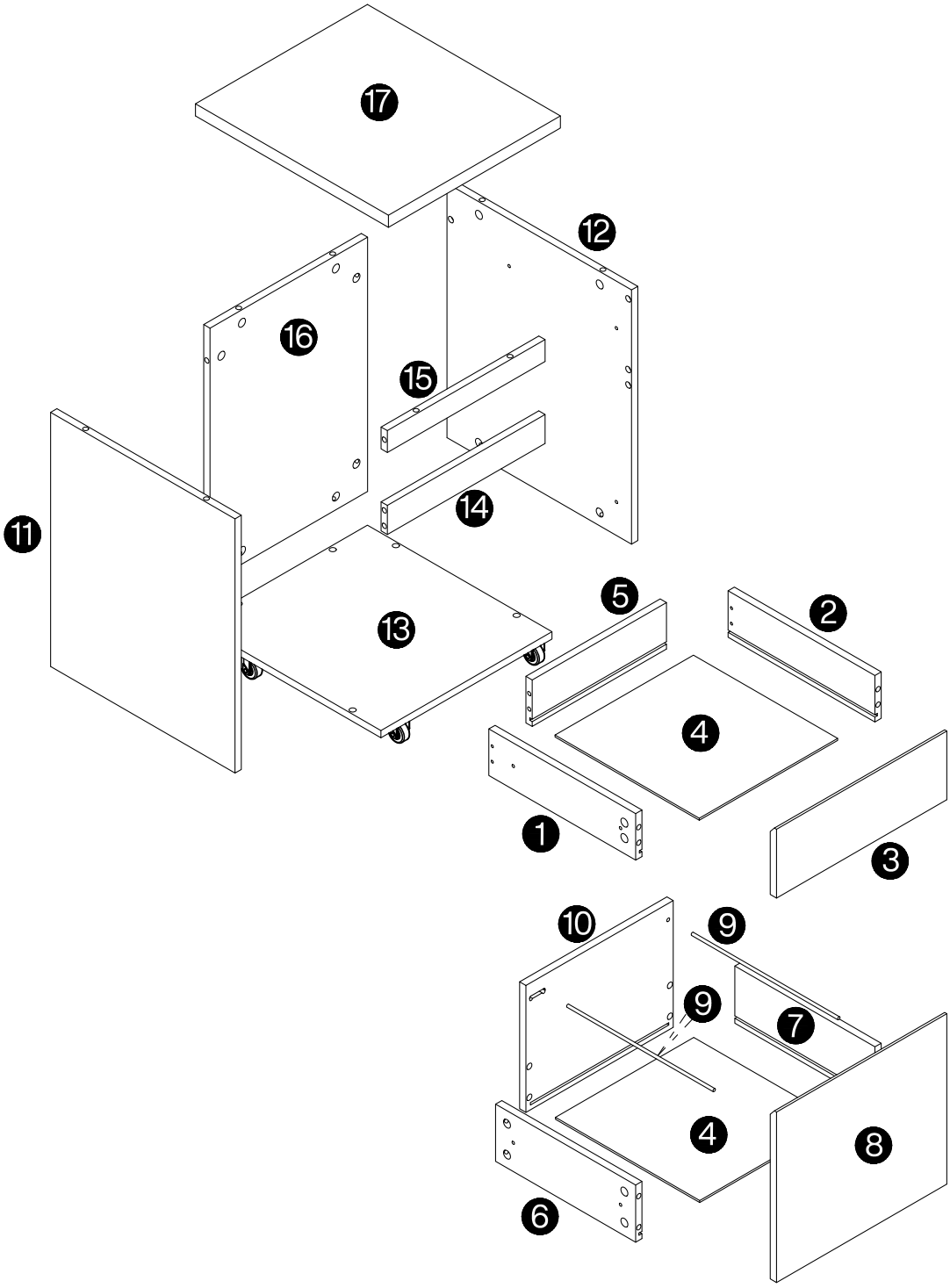

Caution

Make sure all parts are included. Most board parts are labeled or stamped on the raw edge.
Contact us for a free replacement if you encounter any damaged or missing parts.

Parts List

1 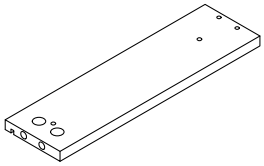 1 pc	2 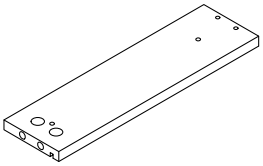 1 pc	3 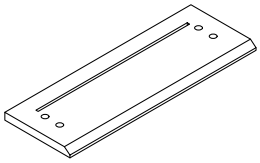 1 pc	4 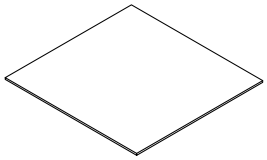 2 pcs	5 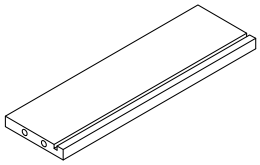 1 pc
6 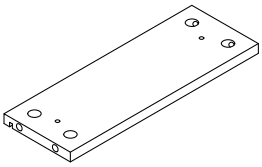 1 pc	7 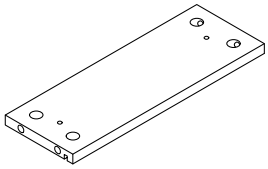 1 pc	8 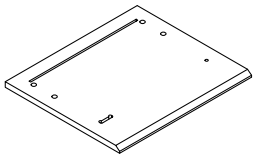 1 pc	9 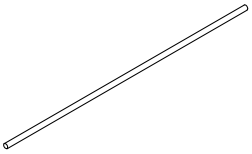 2 pcs	10 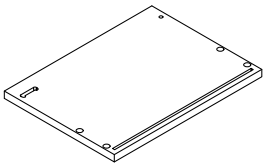 1 pc
11 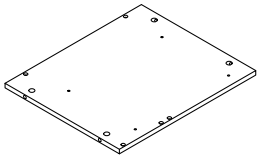 1 pc	12 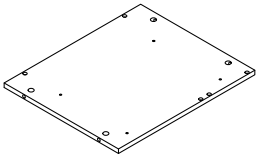 1 pc	13 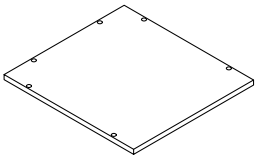 1 pc	14 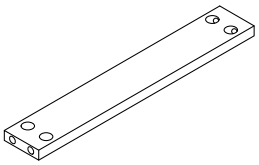 1 pc	15 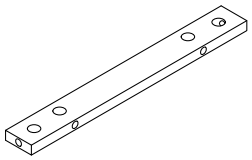 1 pc
16 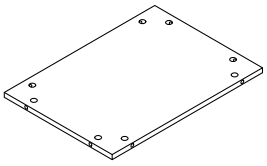 1 pc	17 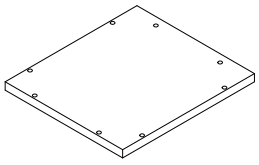 1 pc			

Hardware List

A	B	C	D	E	F
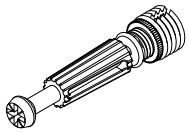	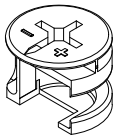	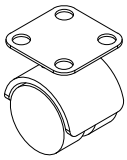		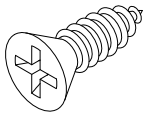	
M6x40mm	Ø15x12mm		300mm	Ø3.5x14mm	Ø3.5x35 mm
36+2 pcs	36+2 pcs	4 pcs	2 sets	32+4 pcs	4+2 pcs

G					
					
1 pc					

Please split component "D" into "D-1" and "D-2" before assembling the slide rail component, and then proceed to the next step of assembly

Step 1

Pull apart component "D" to each side, and then gently push up the lever of component "D-2"

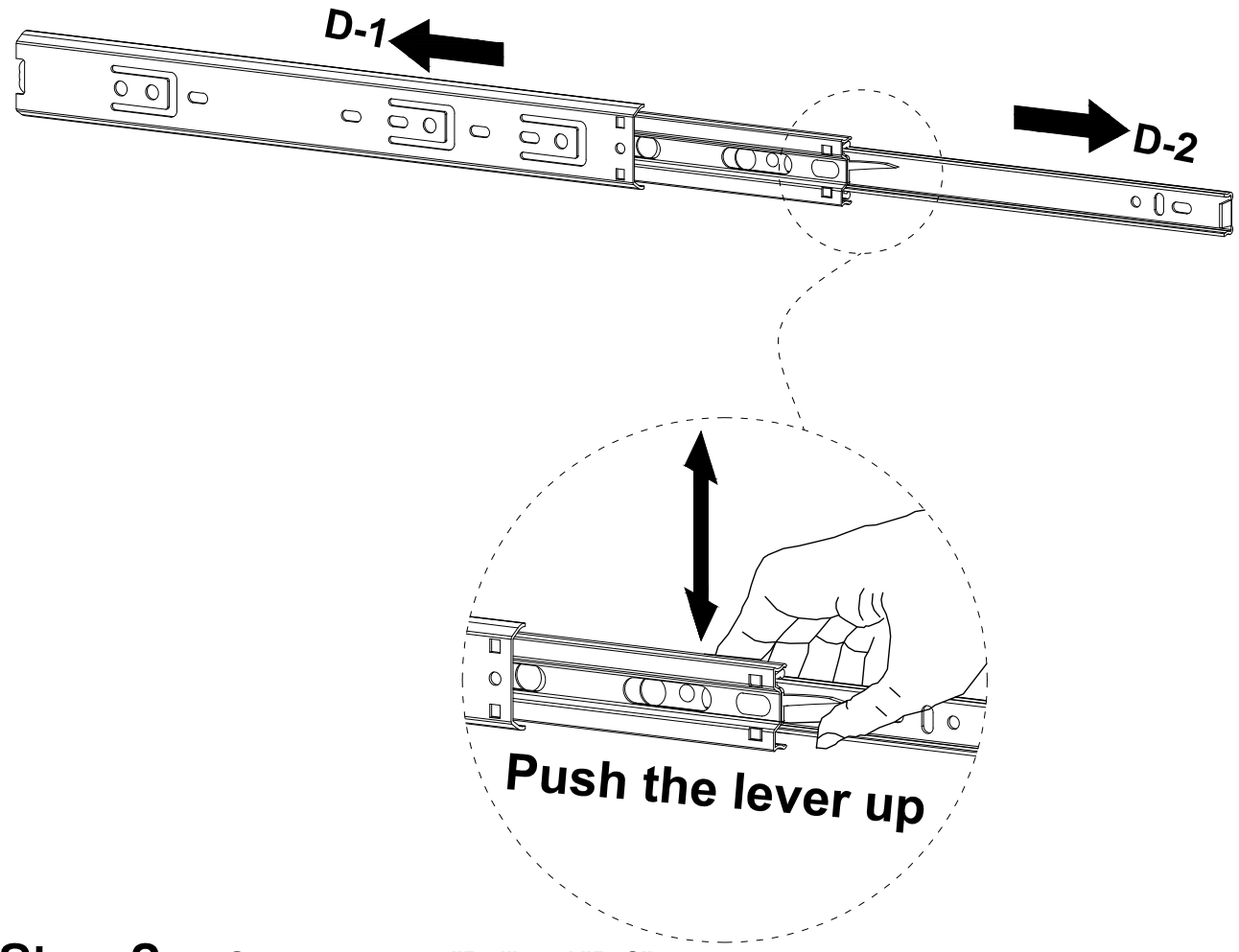

Step 2

Split component "D-1" and "D-2"

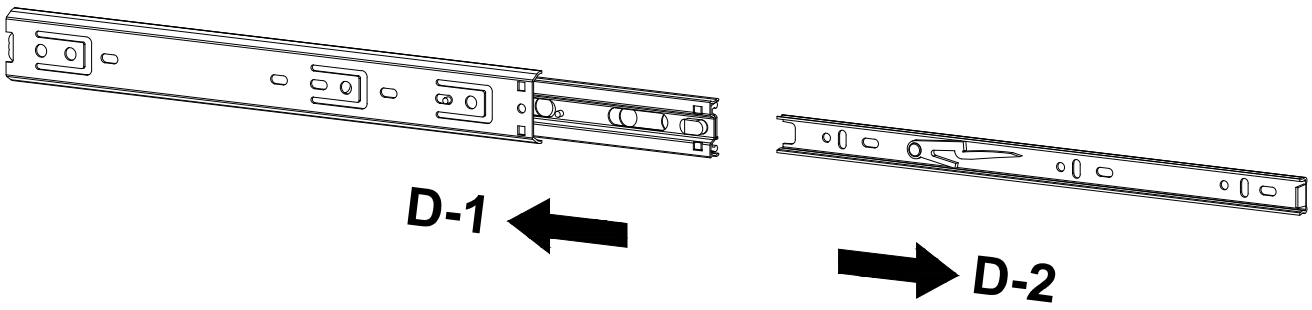

1

B	A
	
Ø15x12mm	M6x40mm
4 pcs	4 pcs

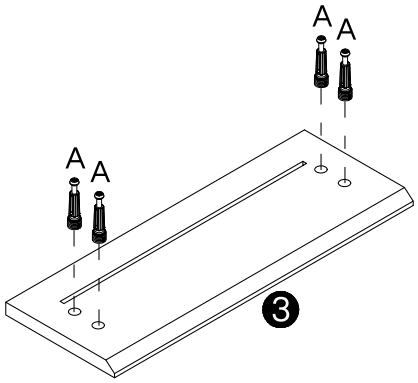

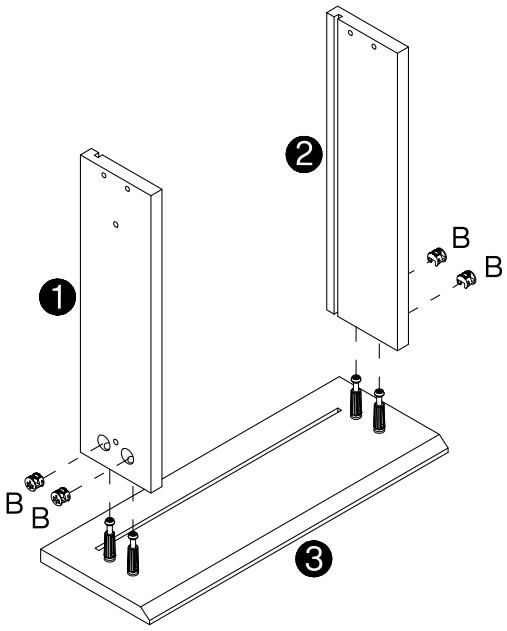

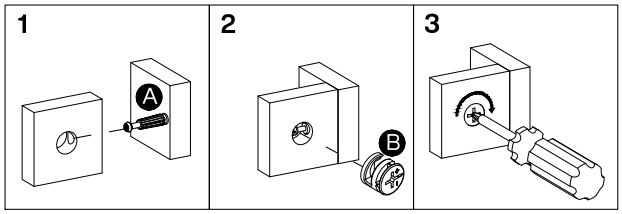

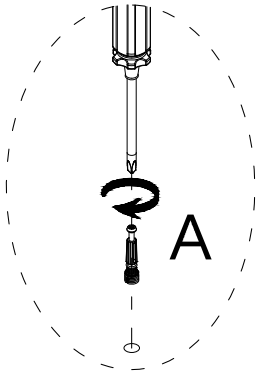

2

F

Ø3.5x35mm
4 pcs

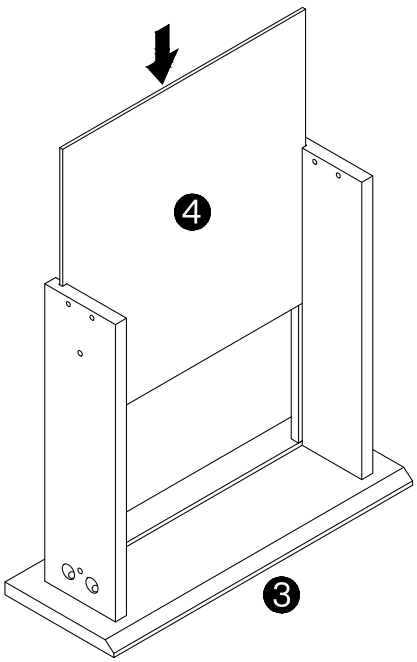

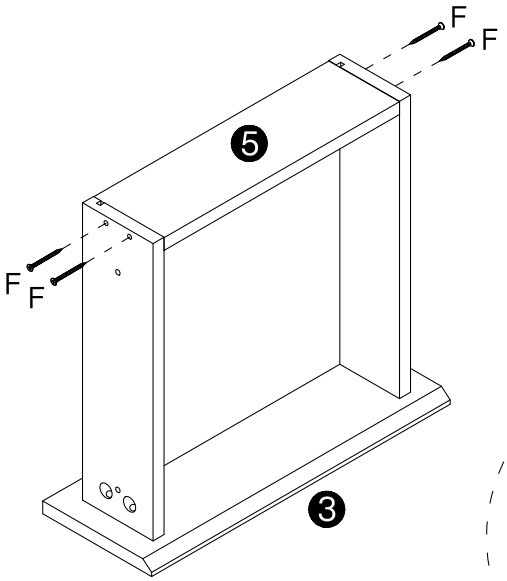

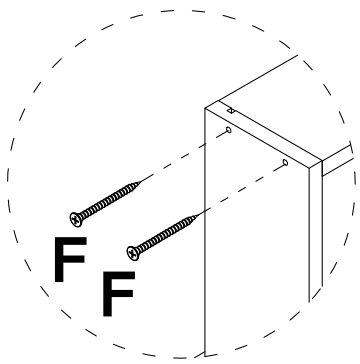

3

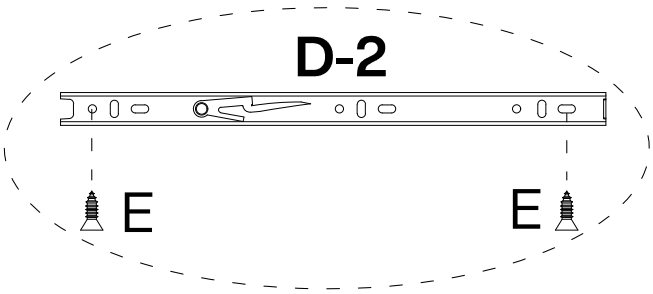

D-2	E
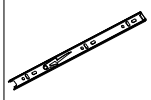	 Ø3.5x14mm
2 pcs	4 pcs

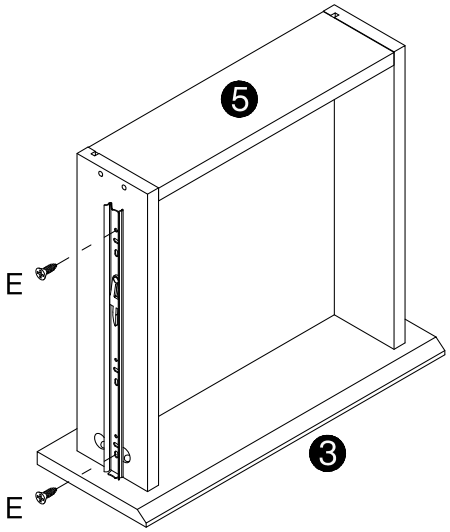

4

A
 M6x40mm
8 pcs

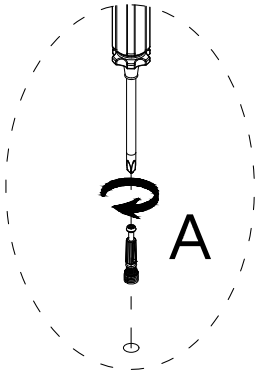

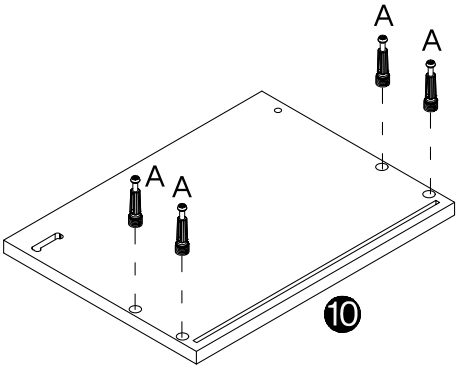

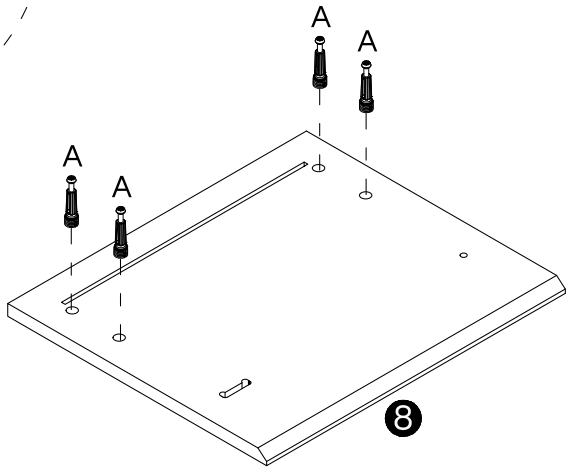

5

B

Ø15x12mm
4 pcs

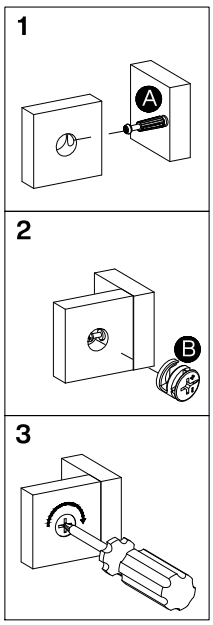

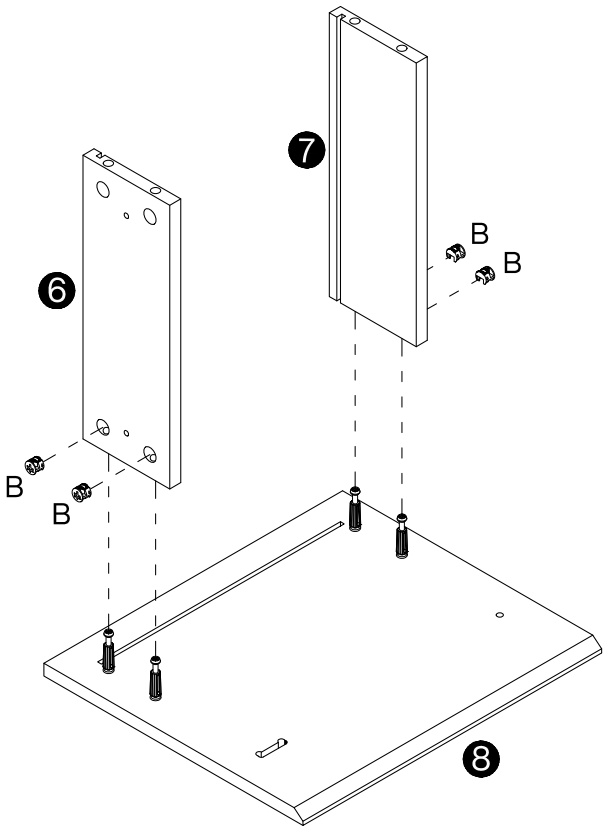

6

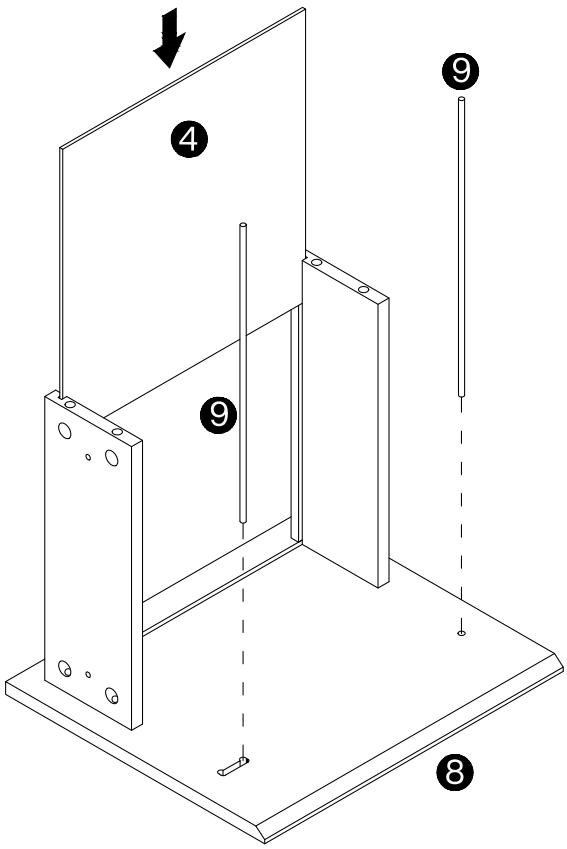

7

B

Ø15x12mm
4 pcs

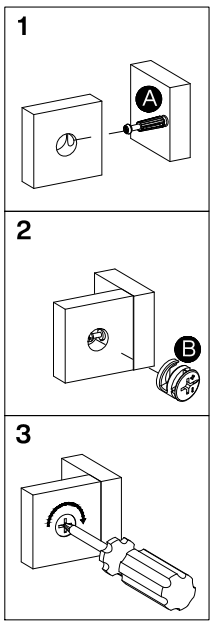

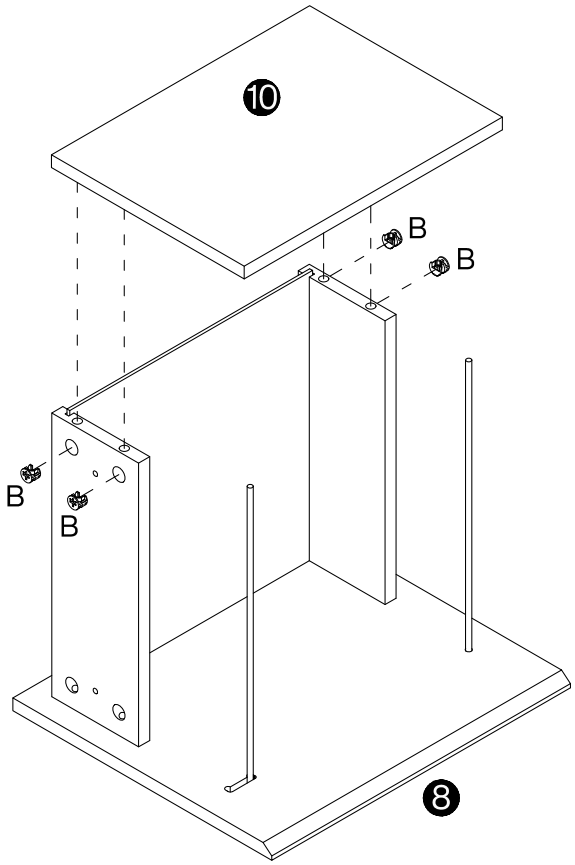

8

D-2	E
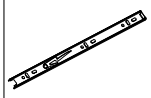	
2 pcs	Ø3.5x14mm 4 pcs

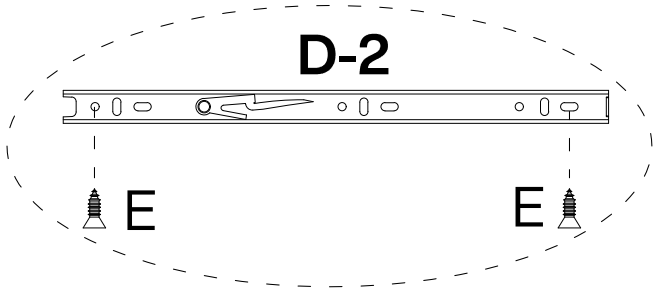

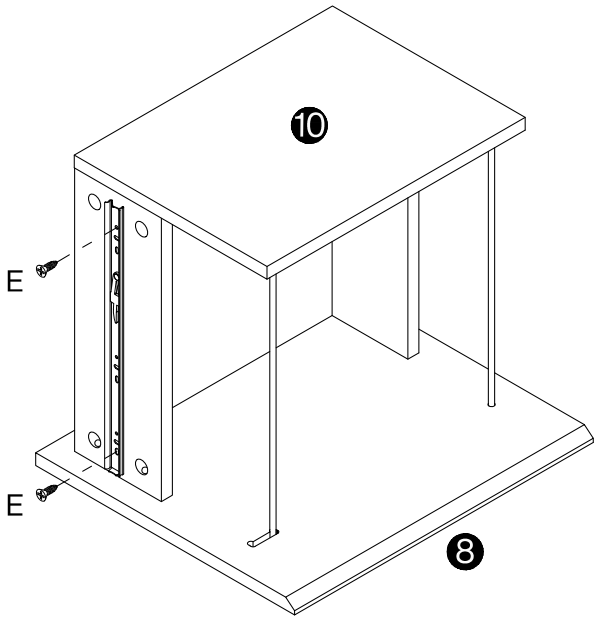

9

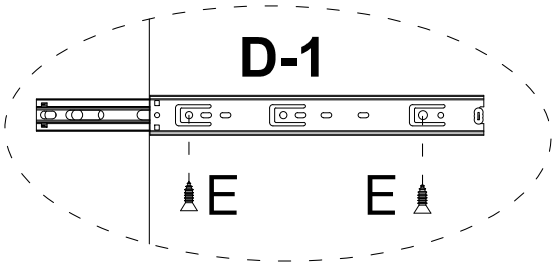

E	D-1	A
Ø3.5x14mm		M6x40mm
4 pcs	2 pcs	5 pcs

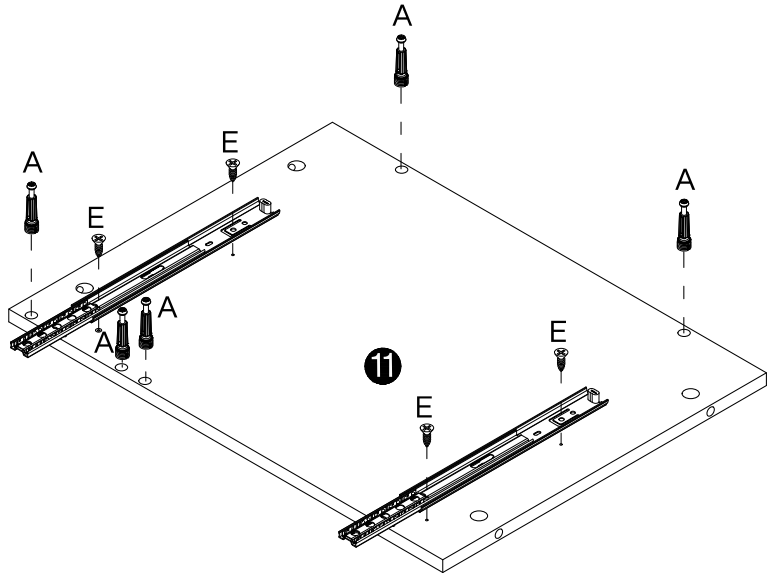

10

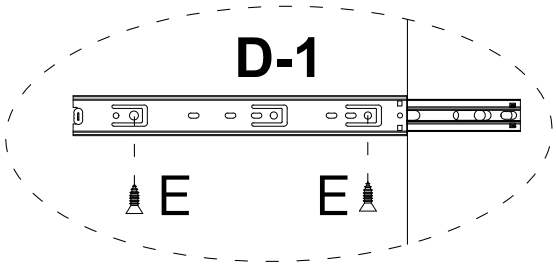

E	D-1	A
Ø3.5x14mm		M6x40mm
4 pcs	2 pcs	5 pcs

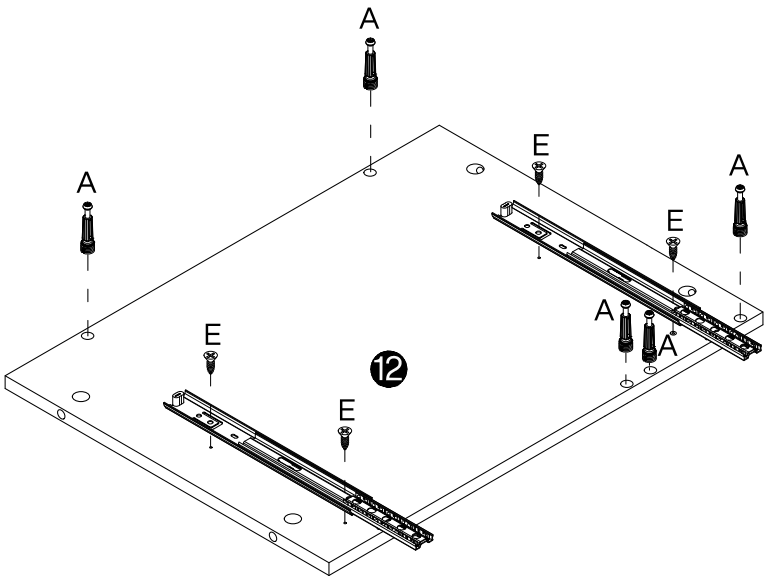

11

A

M6x40mm
14 pcs

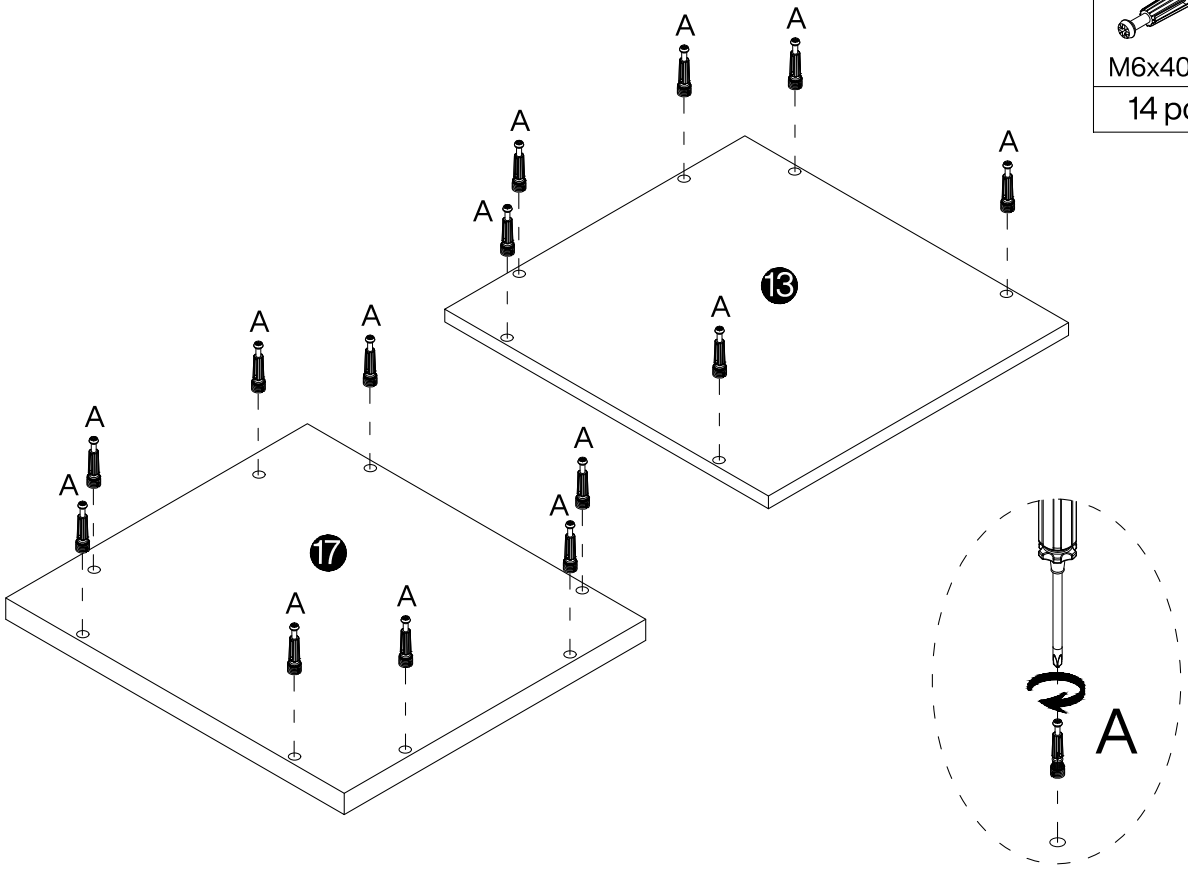

12

B

Ø15x12mm
10 pcs

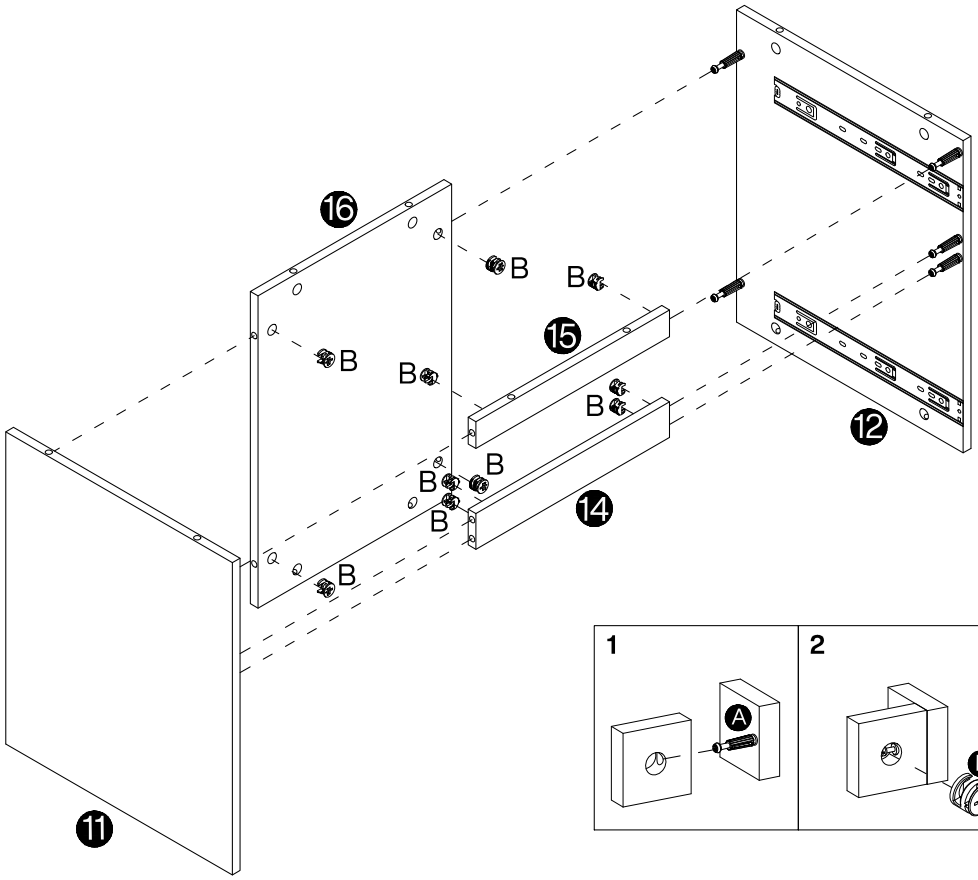

13

B

Ø15x12mm
6 pcs

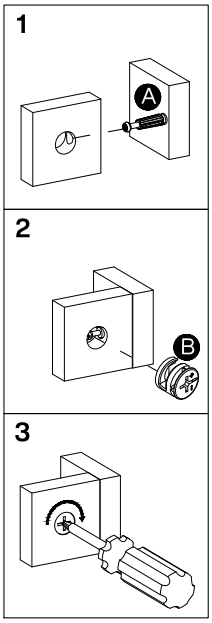

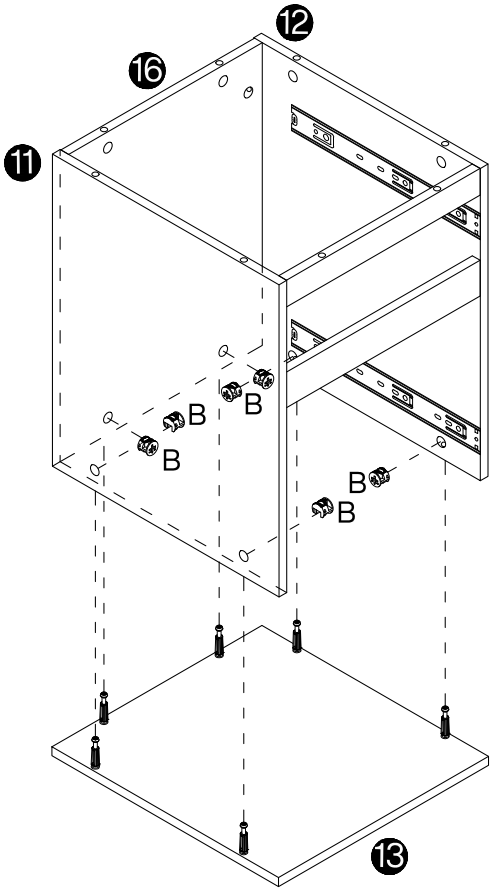

14

B

Ø15x12mm
8 pcs

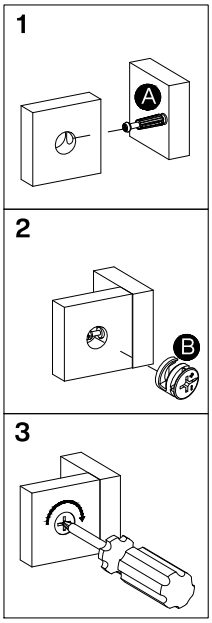

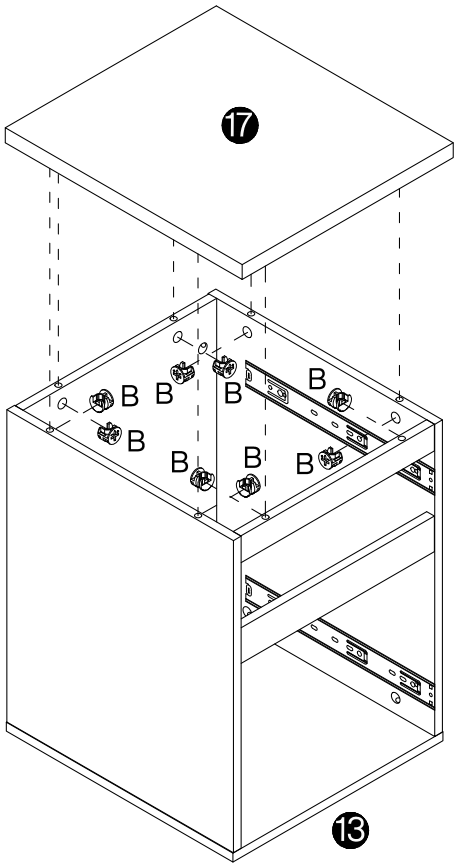

15

E	C
 Ø3.5x14mm	
16 pcs	4 pcs

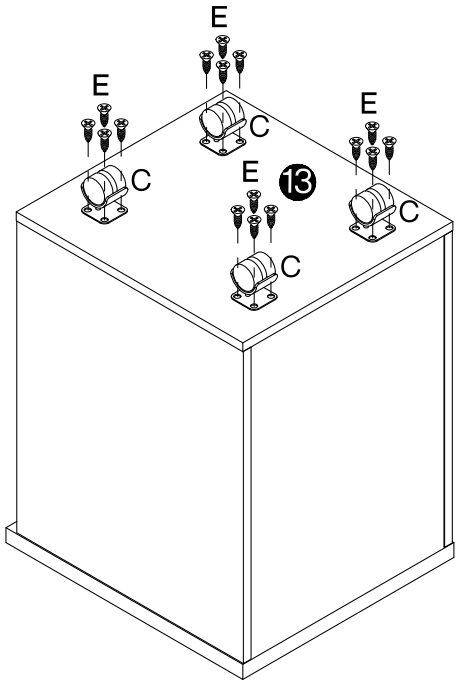

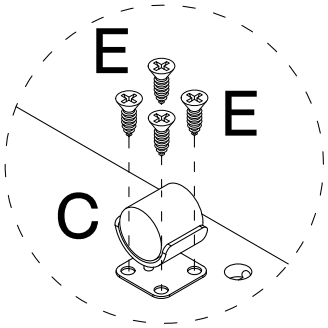

To prevent the wheels from falling off, please install 4 screws.

16

1

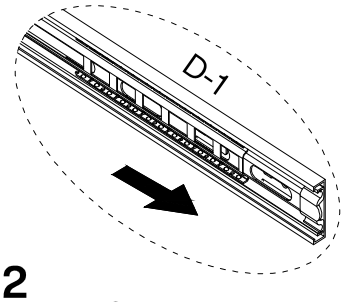

2

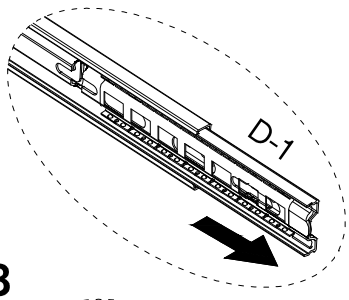

3

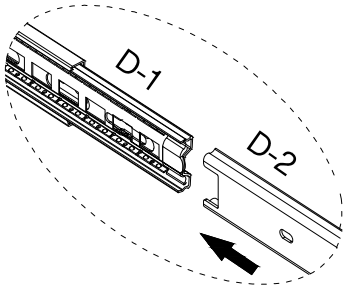

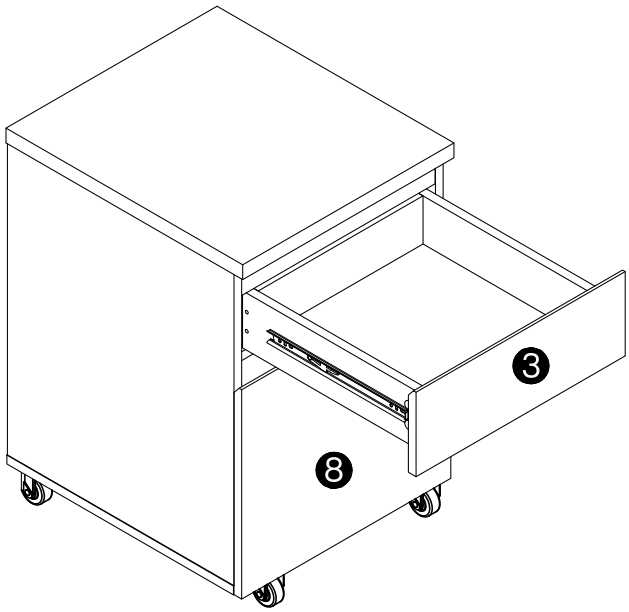

Align the "D-2" with the "D-1" guideway and gently push it in to complete the assembly

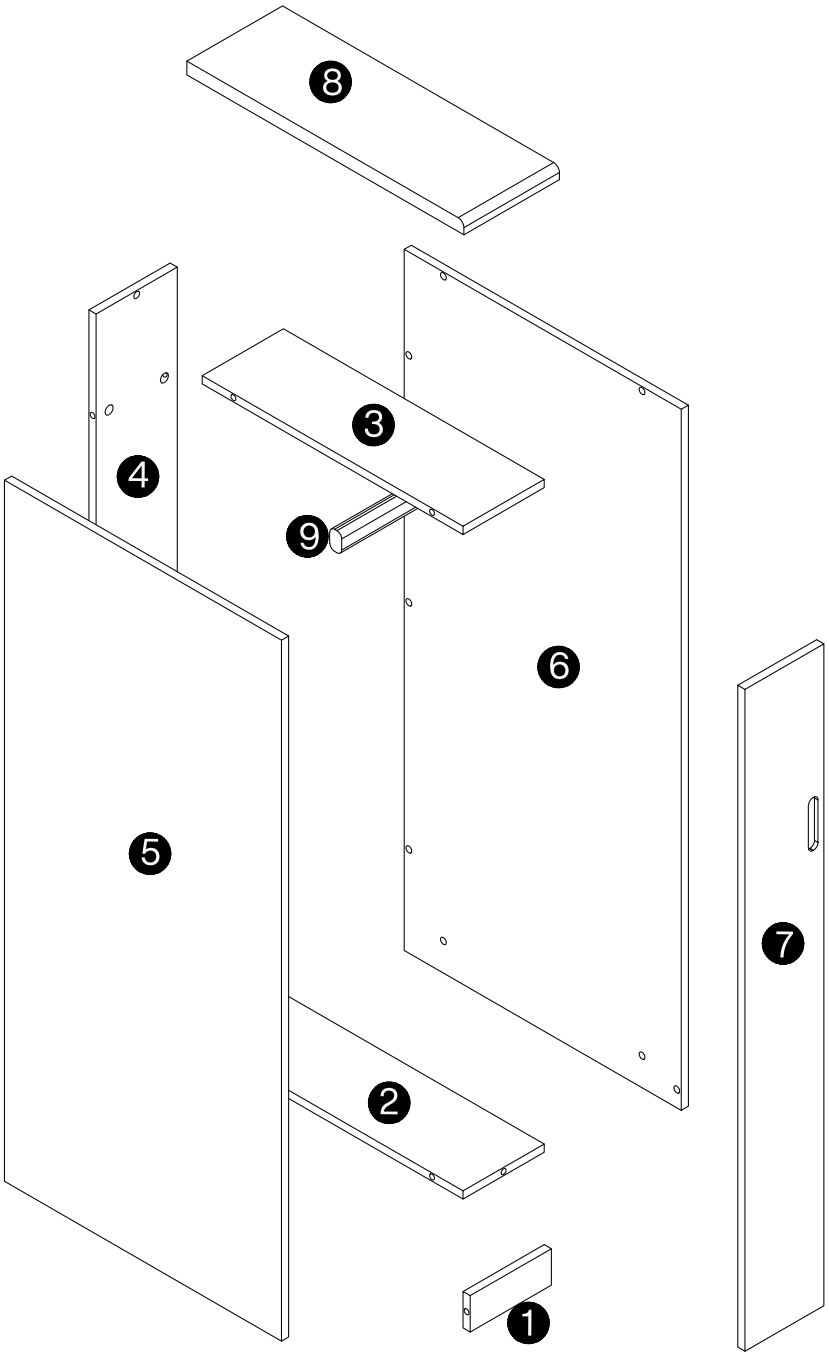

⚠ Caution

Make sure all parts are included. Most board parts are labeled or stamped on the raw edge.
Contact us for a free replacement if you encounter any damaged or missing parts.

Parts List

❶ 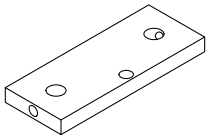 1 pc	❷ 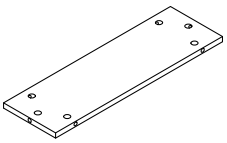 1 pc	❸ 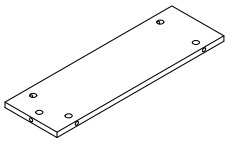 1 pc	❹ 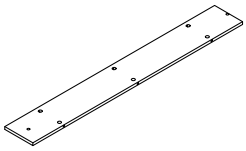 1 pc	❺ 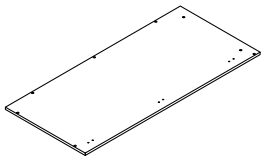 1 pc
❻ 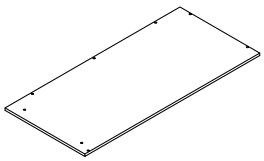 1 pc	❼ 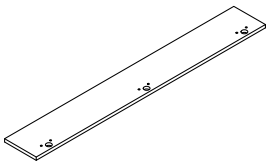 1 pc	❽ 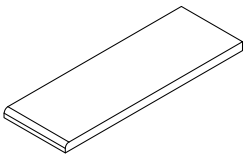 1 pc	❾  1 pc	

Hardware List

A	B	C	D	E	F
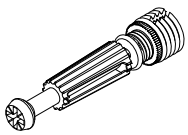 M6x40mm	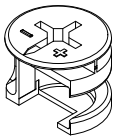 Ø15x12mm	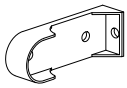	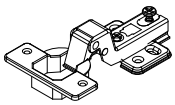	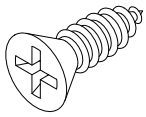 Ø3.5x14mm	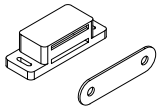
23+2 pcs	23+2 pcs	2 pcs	3 pcs	24+2 pcs	1 pc

G	H				
	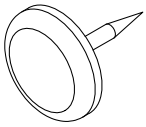				
1pc	4 pcs				

1

E	A
	
Ø3.5x14mm	M6x40mm
1 pc	8 pcs

C
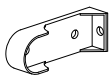
1pc

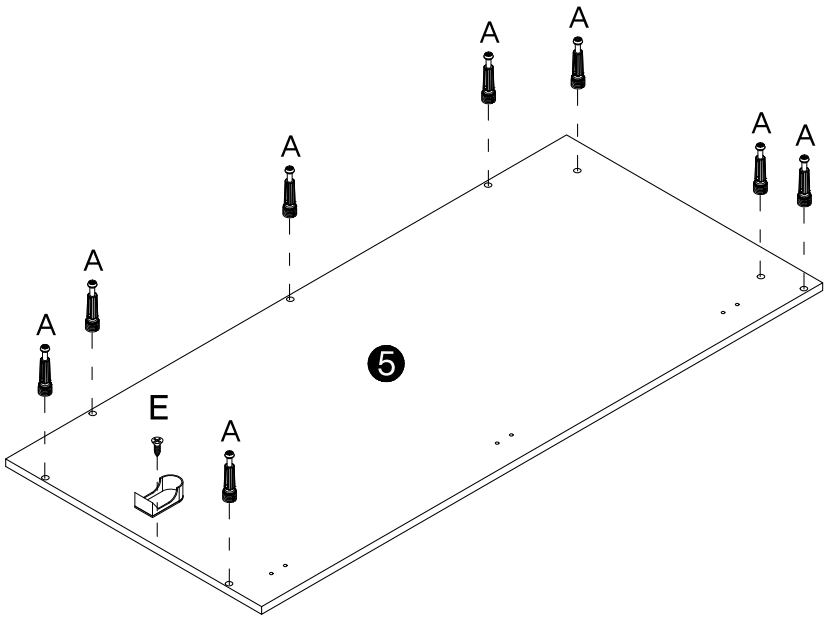

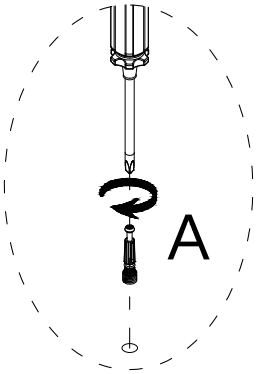

2

E	A
	
Ø3.5x14mm	M6x40mm
1 pc	8 pcs

C
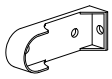
1pc

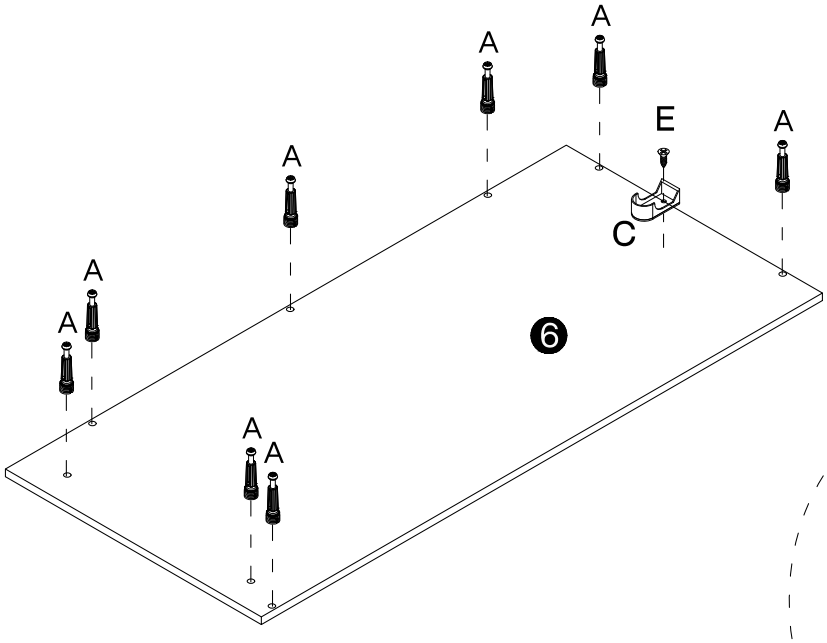

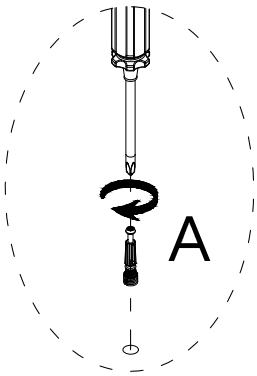

3

A

M6x40mm
3 pcs

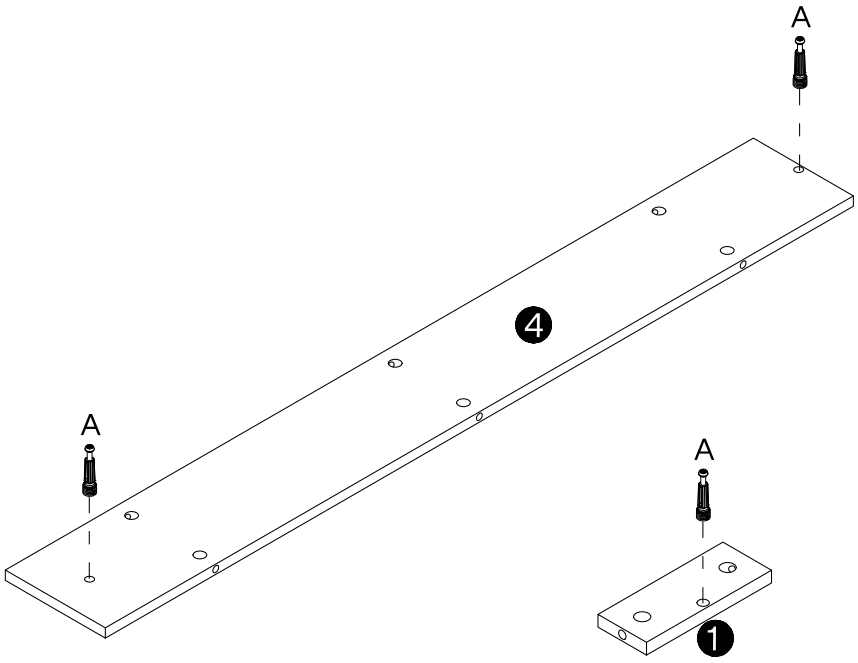

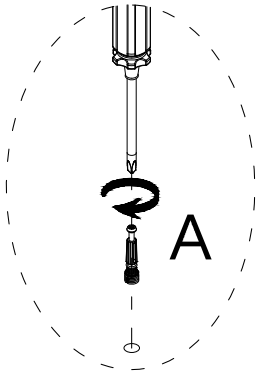

4

E	B
	
Ø3.5x14mm	Ø15x12mm
2 pcs	1 pc

F

1 pc

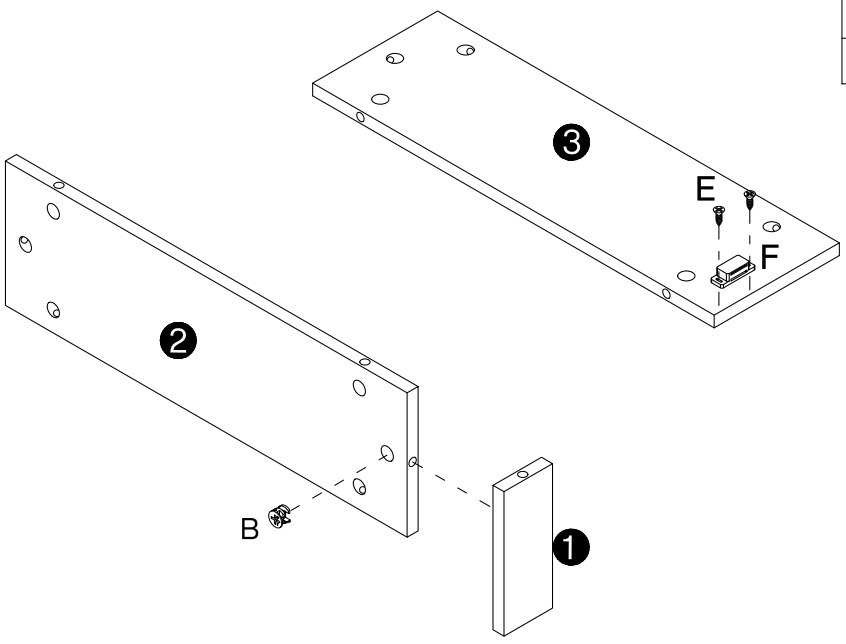

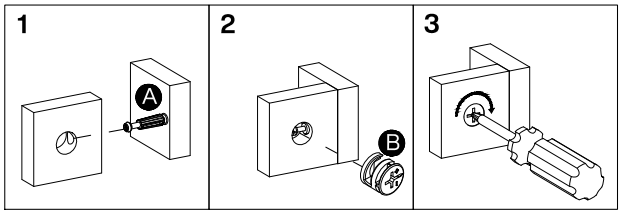

5

B

Ø15x12mm
2 pcs

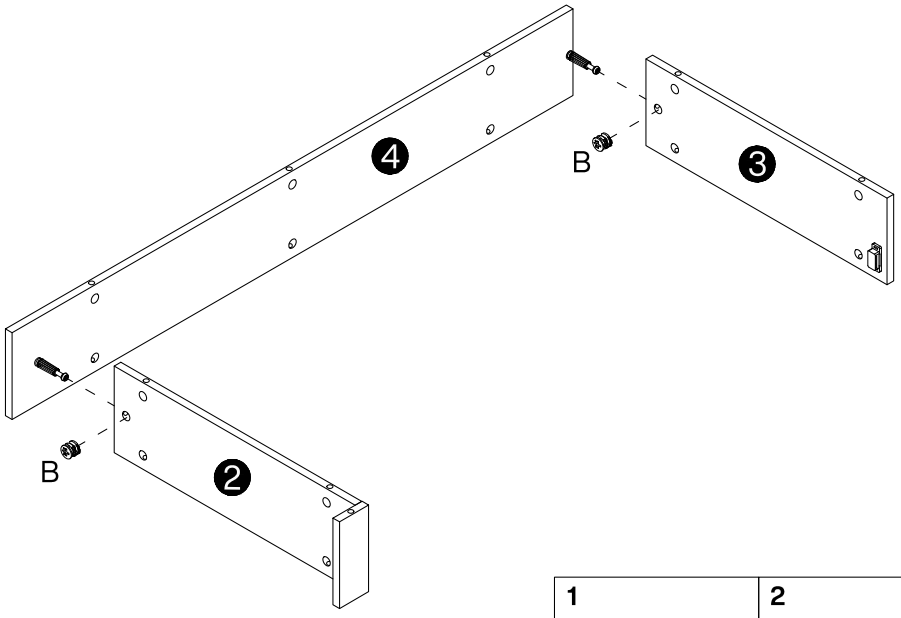

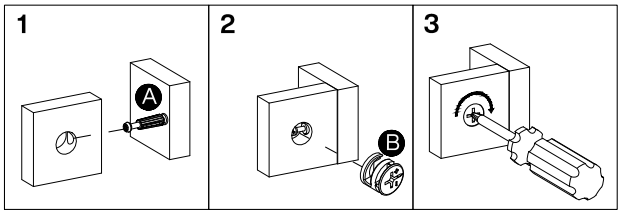

6

B

Ø15x12mm
7 pcs

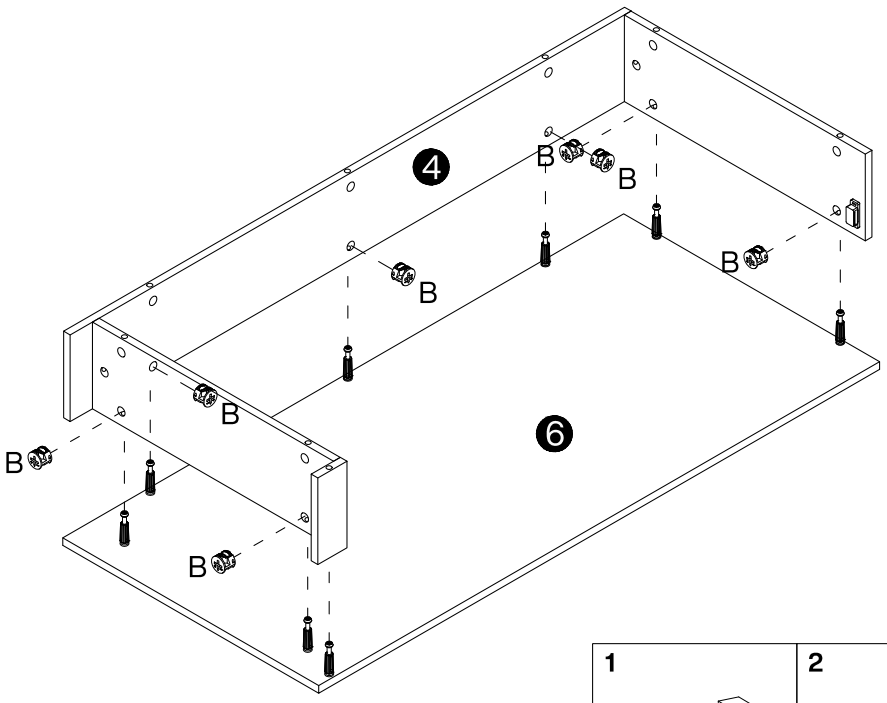

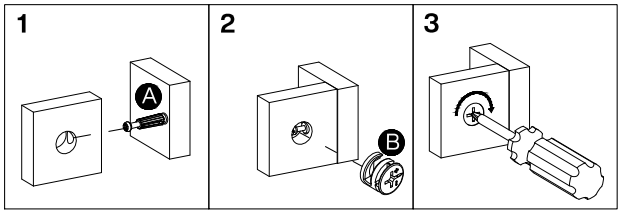

7

H	B
	 Ø15x12mm
4 pcs	8 pcs

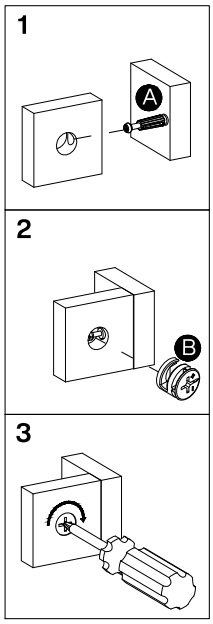

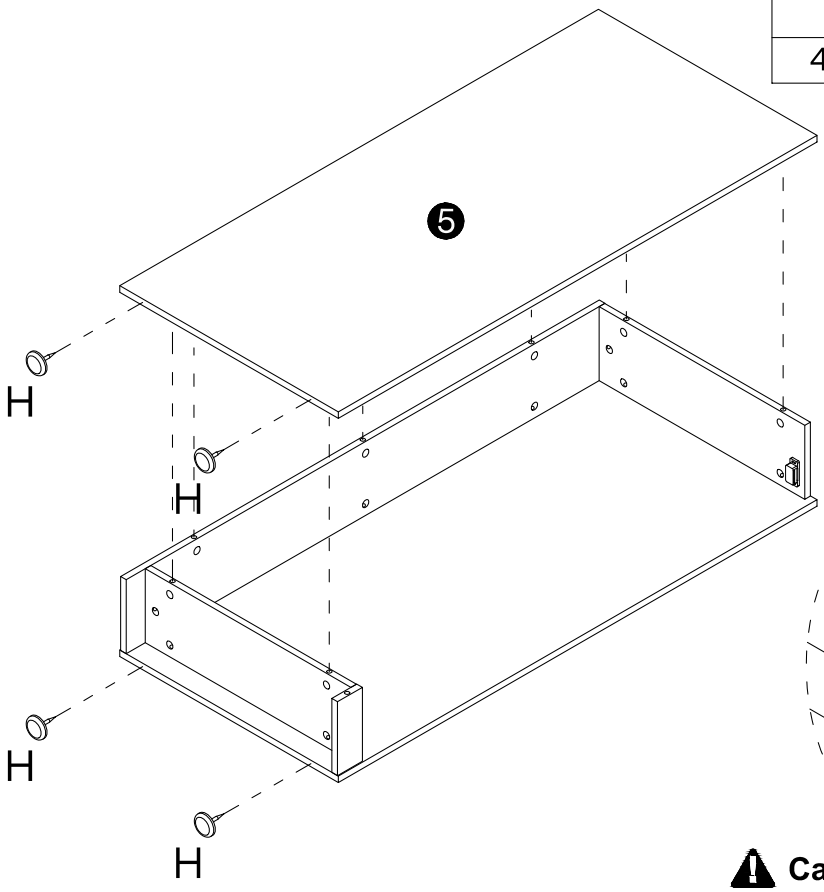

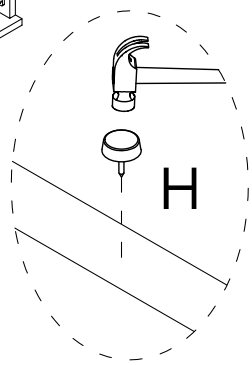

Caution! Tap lightly

8

D	E
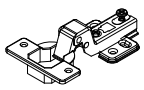	 Ø3.5x14mm
3 pcs	8 pcs

F

1 pc

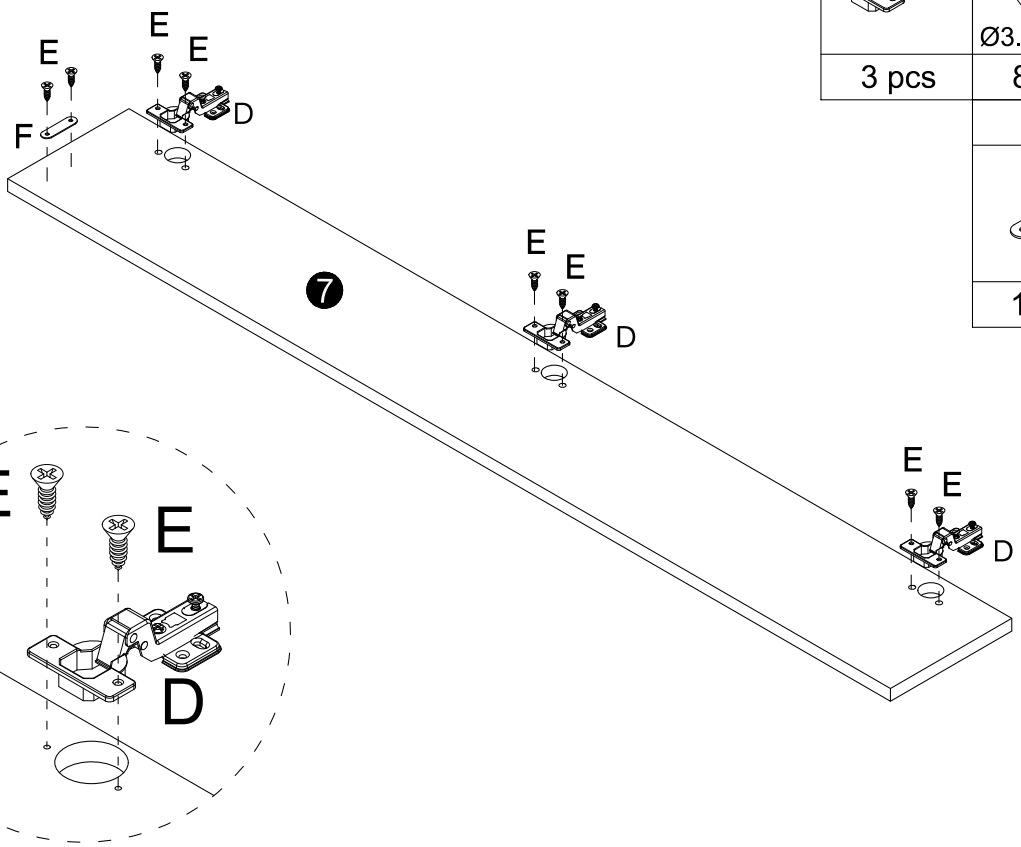

9

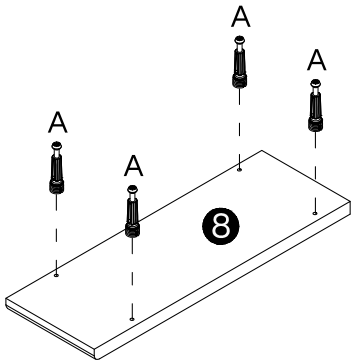

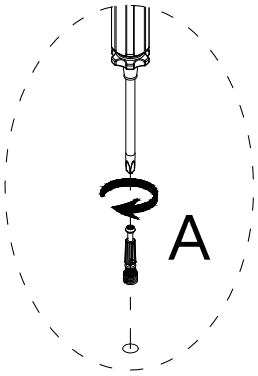

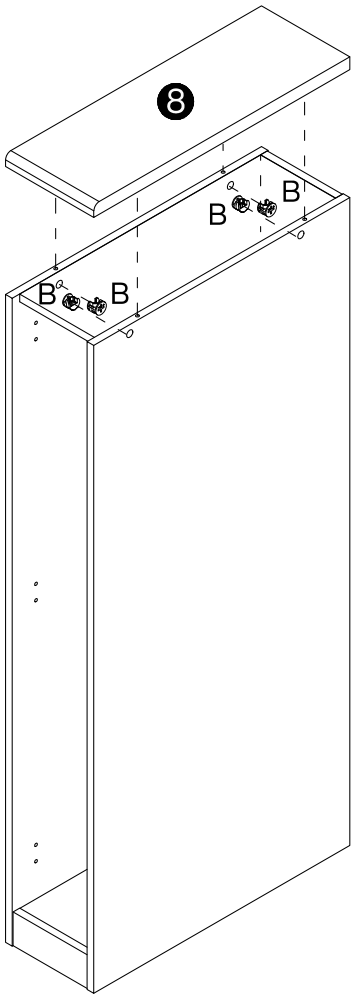

A	B
	
M6x40mm	Ø15x12mm
4 pcs	4 pcs

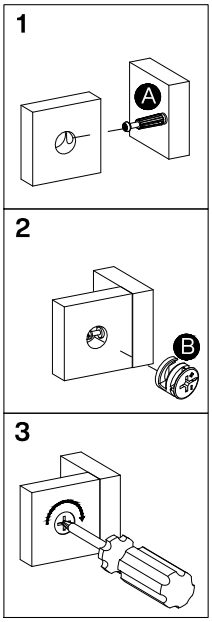

10

E

Ø3.5x14mm
12 pcs

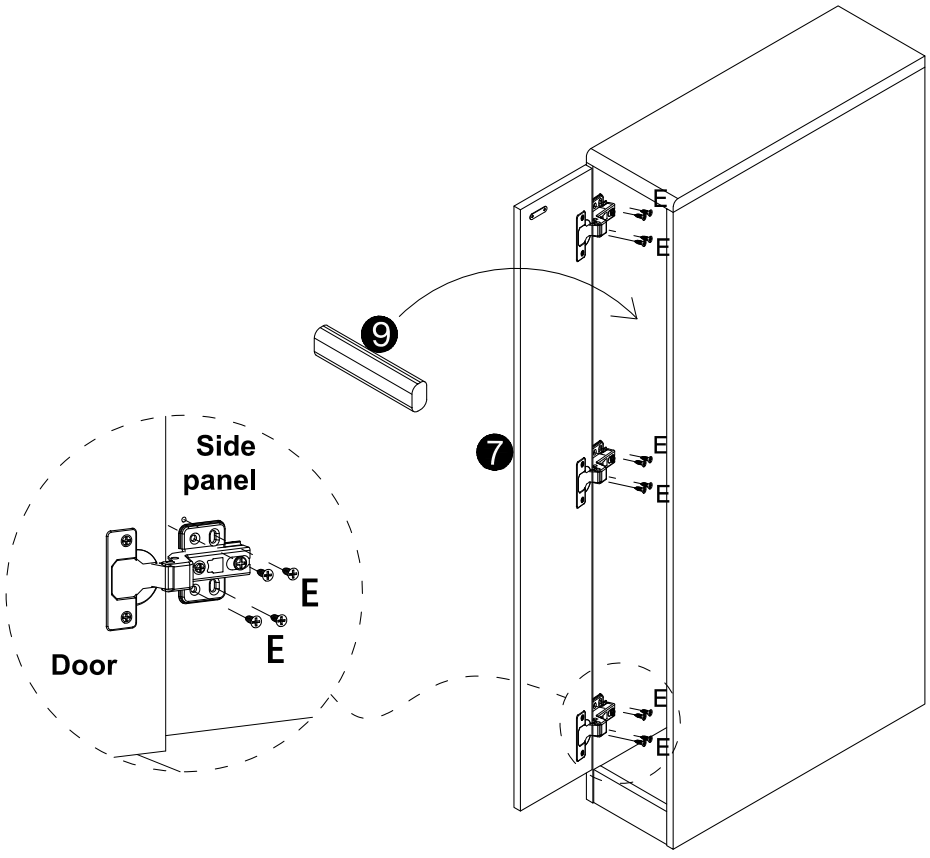

To prevent the door hinge from falling off,please install 4 screws