INSTRUCTION MANUAL

Model: WFK-VIF15OL

15" Built-In Undercounter Kegerator



BEFORE USE, PLEASE READ AND FOLLOW ALL SAFETY RULES AND OPERATING INSTRUCTIONS.

Kegco has a policy of continuous improvement on its products and
reserves the right to change materials and specifications without notice

KEGCO

8520 Miralani Dr., San Diego, CA 92126

Table of Contents

Diagram and Description	.....	3
Safety Tips	.....	4
Installation Instructions	.....	5
Caster Installation	.....	5
Rail Installation	.....	5
Door Handle Installation	.....	6
Undercounter Installation	.....	6
Care and Maintenance	.....	7
Operation Instructions	.....	8
Setting Temperature	.....	9
Light Settings	.....	9
Troubleshooting Guide	.....	10
Technical Specifications	.....	11
Warranty Information	.....	12

Diagram and Description

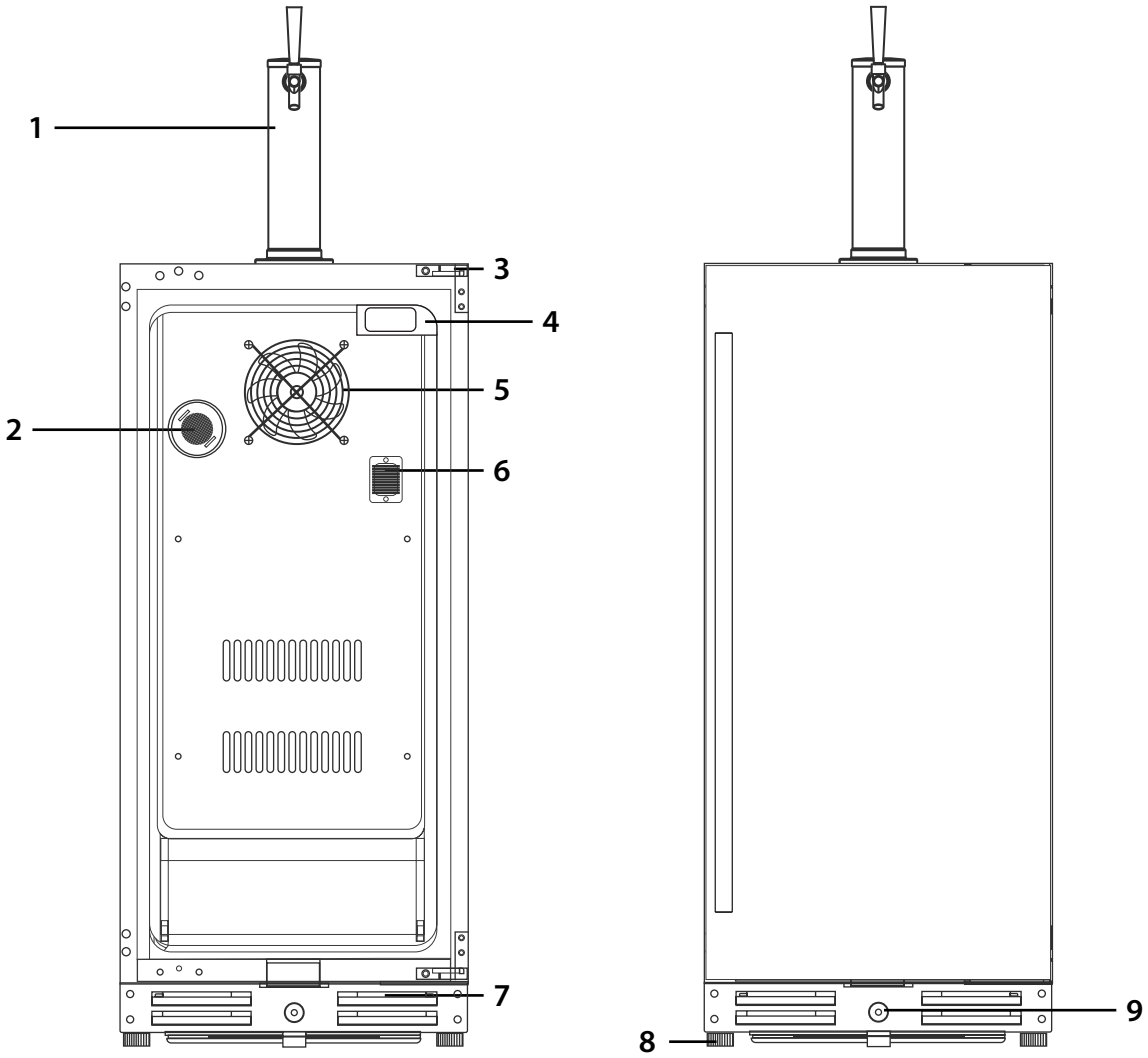

1. **Draft Tower**
2. **Charcoal Filter**
3. **Door Hinge**
4. **Control Panel**
5. **Fan**
6. **Temperature Sensor**
7. **Front Ventilation Base**
8. **Adjustable Feet**
9. **Door Lock**

Safety Tips

Before using this appliance, it must be properly positioned and installed as described in this manual, so please read carefully. To reduce the risk of fire, electrical shock or injury when using this appliance, follow these basic precautions. Failure to heed these safety requirements may result in severe personal injury or death.

⚠ DANGER ⚠

- Plug into a grounded 3-prong outlet. Do not under any circumstances cut or remove the third ground prong from the power cord supplied, do not use an adapter, and do not use an extension cord.
- It is recommended that a separate circuit, serving only your appliance be used. Do not use outlets that can be turned off by a switch or pull chain.
- Never clean appliance parts with flammable fluids and do not store or use gasoline or other flammable vapors and liquids in the vicinity of this or any other appliance. The fumes can create a fire hazard or explosion.
- Unplug the appliance or disconnect power before cleaning or servicing. Failure to do so can result in electrical shock or death.
- Do not attempt to repair or replace any part of your appliance unless it is specifically recommended in this manual. All other servicing should be referred to a qualified technician.

⚠ WARNING ⚠

- Use two or more people to move and install appliance. Failure to do so can result in back or other injury.
- To ensure proper ventilation for your appliance, the front of the unit must be completely unobstructed. Choose a well-ventilated area that is protected from the elements, such as wind, rain, water spray or drips.
- The appliance should not be located next to ovens, grills or other high heat sources or in areas of extreme cold.
- The appliance must be installed in accordance with state and local codes. A standard electrical supply (115 V AC only, 60 Hz), properly grounded in accordance with the National Electrical Code and local ordinances is required.
- Do not kink or pinch the power supply cord of appliance.
- The fuse (or circuit breaker) size should be 15 amperes.
- It is important for the appliance to be leveled in order to work properly.
- Never allow children to operate, play with or crawl inside the appliance. Child entrapment and suffocation are not just problems of the past, junked or abandoned appliances are still dangerous. When no longer using your old appliance, take off the door and leave the shelves in place so that children may not climb inside easily.
- Do not use solvent-based cleansers or abrasives on the interior as they may damage or discolor the interior.
- Because of potential safety hazards under certain conditions, it is strongly recommended that you do not use an extension cord with this appliance. However, if you must use an extension cord, it is absolutely necessary that it be a UL/CUL-Listed, 3-wire grounding type appliance extension cord having a grounding type plug and outlet and that the electrical rating of the cord be 115 volts and at least 10 amperes.
- If the appliance is going to be used in an area that is prone to power surges/outages, it is suggested that you use a power surge protector. The surge protector that you select must have a surge block high enough to protect the appliance it is connected to. Damages due to power surges are not considered a manufacturer covered defect and will void your product warranty.
- The cord should be secured behind the appliance and not left exposed or dangling to prevent accidental injury. Never unplug the appliance by pulling the power cord. Always grip the plug firmly and pull straight out from the receptacle. Repair or replace immediately all power cords that have become frayed or otherwise damaged. Do not use a cord with cracks or abrasion damage along its length or at either end. When moving the appliance, be careful not to damage the power cord.
- Do not use this apparatus for other than its intended purpose.
- **California Proposition 65 Warning:** This product can expose you to hexavalent chromium, also known as chromium 6 (Cr6), which is known in the State of California to cause cancer, birth defects or other reproductive harm. For more information, go to: www.P65Warnings.ca.gov

Failure to heed these safety warnings may result in extensive product damage, serious personal injury, or death.

Installation Instructions

BEFORE USE:

- Remove the exterior and interior packaging, but do not remove any foam insulation surrounding the pipes at the back.
- Before connecting the unit to the power source, let it stand upright for approximately 8 hours. This will reduce the possibility of a malfunction in the cooling system from handling during transportation.
- Clean the interior surface with lukewarm water using a soft cloth.
- Place the unit on a flat, solid floor that is strong enough to support it when it is fully loaded. To level the appliance, adjust the rolling casters at the bottom of the unit.
- When moving your unit, please do not incline it more than 45 degrees.
- Locate the appliance away from direct sunlight and sources of heat (stove, heater, radiator, etc.). Direct sunlight may affect the acrylic coating and heat sources may increase electrical consumption.
- The unit should be placed in an area where the ambient temperature is less than 100 degrees Fahrenheit and higher than the lowest temperature you want to store items. If the ambient temperature is lower than the set temperature, the internal temperature will match the ambient temperature.
- Avoid locating the unit in damp areas.
- Unwind the power cord to its full length and inspect for damage before plugging into the outlet.
- Plug the appliance into an exclusive, properly installed and grounded wall outlet. Do not under any circumstances cut or remove the third (ground) prong from the power cord. Any questions concerning power and/or electrical grounding should be directed to a certified electrician or authorized products service center.
- After plugging the appliance into a wall outlet, allow the unit to cool down for 3 to 4 hours before placing items in the appliance.

Caster Installation (Select Models)

1. Remove everything from the cabinet and lay the unit on a clean, dry, and padded surface
2. Install caster into the holes on the bottom of the unit as shown and tighten with a wrench
3. The two caster equipped with locks should be installed on the front of the unit
4. Once all four caster are attached, return the cabinet to an upright position
5. Allow the unit to sit for 8-10 hours before plugging in to allow the refrigerant to settle

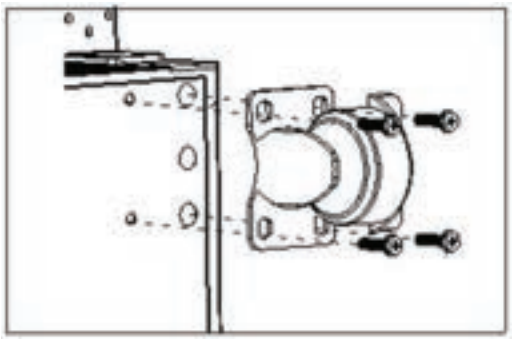

Rail Installation (Select Models)

1. Screw the rail lugs (1) into the top of the refrigerator
2. Install the rail posts (2) on the rail lugs
3. Using the screws provided (3), fasten the rail posts onto the rail lugs

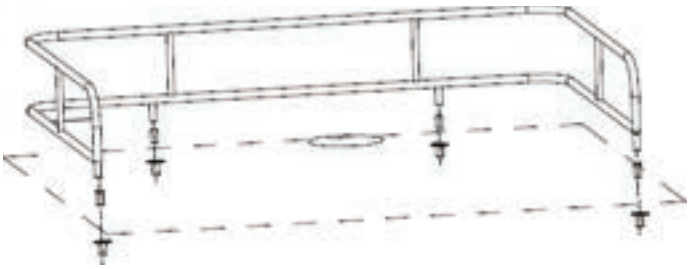

Handle Installation

1. Remove the box containing the handle and screws from the kegerator.
2. Pull out a bit of the rubber gasket from the back side of the holes.
3. Insert the screws through the holes and connect with the handle.

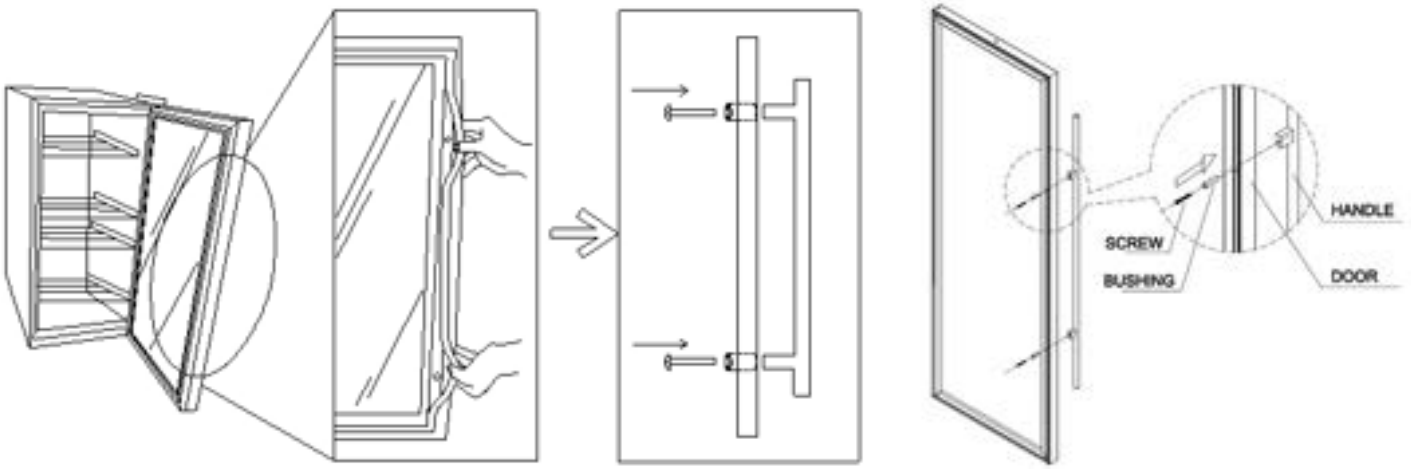

Flange Installation

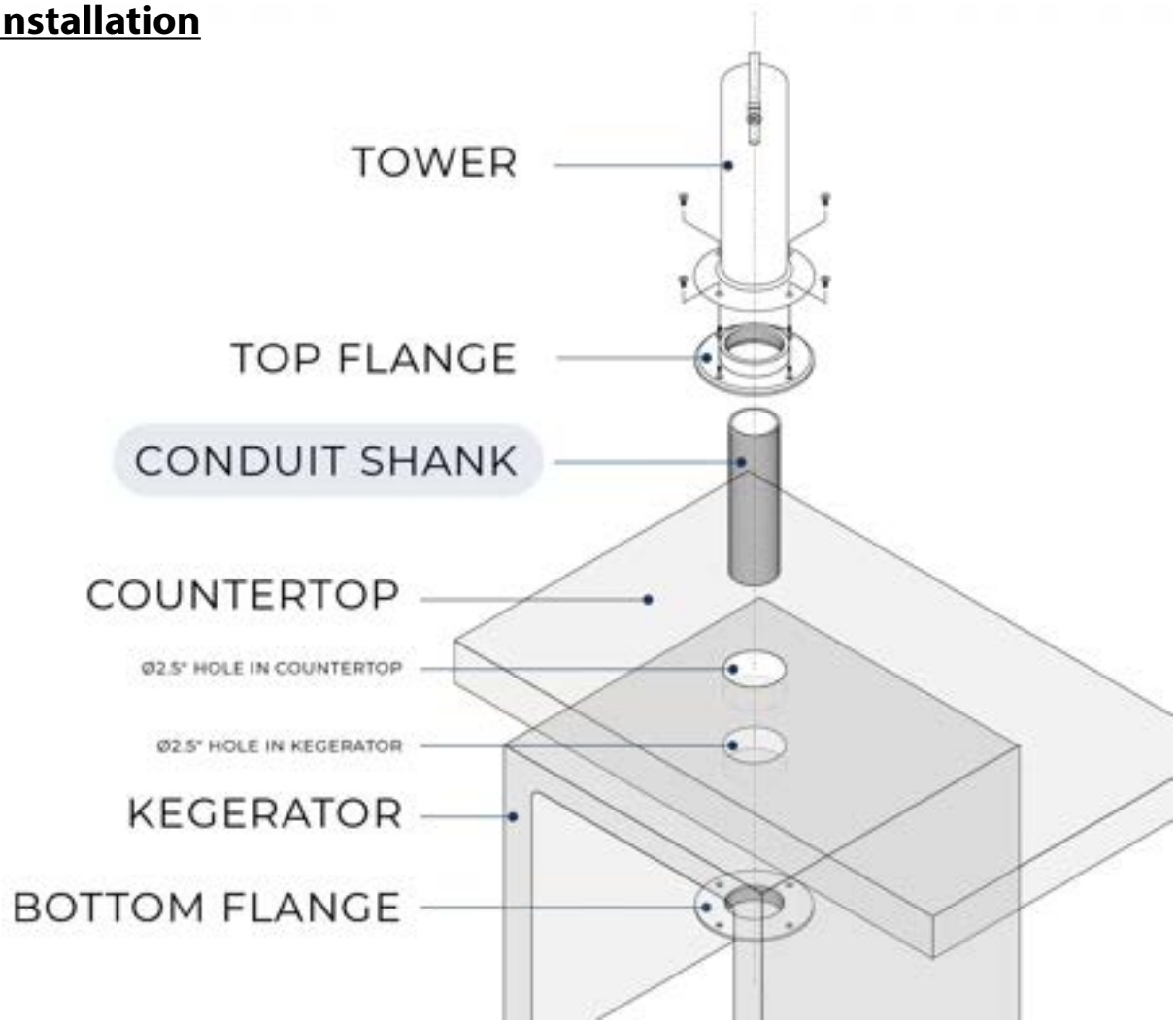

Care and Maintenance

Cleaning your kegerator:

- Turn off the power, unplug the appliance, and remove all items including the dispense kit.
- Wash the inside surfaces with warm water and baking soda solution. The solution should be about 2 tablespoons of baking soda to a quart of water.
- Wring excess water out of the sponge or cloth when cleaning area of the controls, or any electrical parts.
- Wash the outside cabinet with warm water and mild liquid detergent. Rinse and wipe dry with a clean soft cloth.
- Do not use steel wool or a steel brush, caustic soap, abrasive cleaners or bleach on the stainless steel. These will damage the stainless steel or contaminate the stainless steel with steel particles and rusting may occur.
- Dust the front grill and back of the unit twice yearly. Make sure the power is off before cleaning.
- It is recommended to clean the unit completely inside and out yearly to maximize the longevity of the product.

Moving your refrigerator:

- The provided casters (may vary by model) will allow you to roll the appliance from one location to another in your home easily.
- For transportation, remove any items you may have inside the unit.
- Securely tape down all loose items inside your appliance and tape the door shut.
- Be sure the appliance stays secure in the upright position during transportation.
- Protect the outside of the appliance with a blanket or similar item.

Operation Instructions



ADJUST TEMPERATURE

1. Press the “SET / MUTE” button for more than 3 seconds until the display shows the code ST (st)
2. Use the “UP” and “DOWN” buttons to adjust the temperature
3. Press the SET / MUTE button to save the setting. If no button is pressed for 5 seconds, the changes of setting will be saved automatically and the DISPLAY will show the actual temperature



KEYBOARD:



UP/POWER

1. Increase the value;
2. Holding the button for at least 3 seconds, powers the unit ON or OFF



DOWN/LIGHT

1. Decrease the value;
2. Holding the button for half a second turns the interior light ON or OFF



SET/MUTE

1. Use SET after selecting values with the up and down arrows
2. Alarm mute button

DISPLAY:

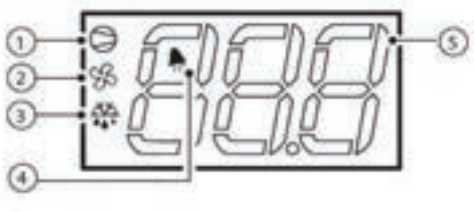

1. COMPRESSOR
2. FAN
3. DEFROST
4. ALARM
5. FIGURE

LEDS AND ASSOCIATED FUNCTIONS:

icon	function	normal operation			start up
		ON	OFF	blink	
	compressor	on	off	request	ON
	fan	on	off	request	ON
	defrost	on	off	request	ON
AUX	aux	output on	output off	-	ON
	alarm	all	no alarm	-	ON

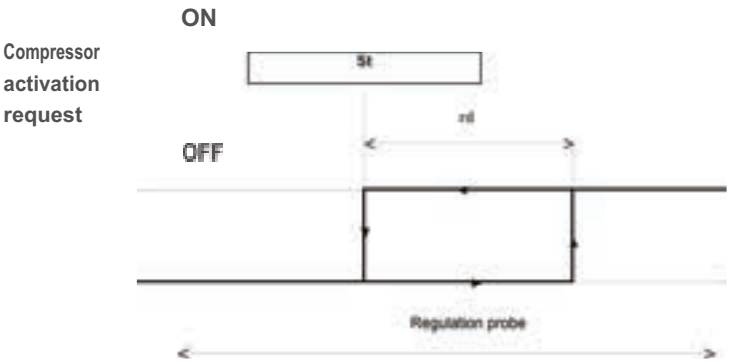

TABLE OF ALARMS

ALARM CODE	DESCRIPTION
LO	low temperature alarm
HI	high temperature alarm
E0	probe 1 error=control
E1	probe 2 error=defrost
E3	enter defrost status d12 twice continuously
dF	defrost running
EE	unit parameter error
EF	operating parameter erro

NOTE: The desired temperatures may fluctuate depending on whether the interior light is ON or OFF, the ambient temperature, the location of unit and the orientation of the bottles. The display is just a guide, be guided by how cold your drinks are at consumption. Remember units go into defrost mode and this will show a higher display, it's only for short periods and doesn't have time to effect drink temperature. In general once unit has settled it will keep products within 5°F (2°C) of the set temp easily in temperatures up to and beyond 100°F (38°C) .

CAUTION

1. In the event of a power interruption, all previous temperature settings will be automatically saved and each compartment will return to the previous temperature setting.
2. If the unit is unplugged, loses power, or is turned off, you must wait over 6 minutes before restarting. Within this 6 minutes, compressor protect itself and will not start even power ON again
3. When you use the refrigerator for the first time or restart the refrigerator after having been shut off for a long time, there will be afew degrees variance between the temperature you select and the one indicated on the LED readout for the first few hours of operation. After a few hours of operation, the temperature will normalize to the displayed temperature.

Troubleshooting Guide

PROBLEM	POSSIBLE CAUSE	SOLUTION
Kegerator does not operate	Not plugged in or the appliance is turned off The appliance is turned OFF at the control panel The circuit breaker tripped or a fuse has blown out	Press ON/OFF Check and make sure the power plug is well connected Ask for help
Kegerator is not cold enough; cannot cool down to preset temp.	Compressor does not start	Ask for help, check the connection of the compressor
	Compressor self-protected and stop operating	Ambient temperature is too high and over 100°F degree Air venting is not smooth, check the air duct and make sure it is not blocked Fan operates slowly or faulty and stops operating Door is not closed completely, or open for a long time Compressor or its components are faulty
	Fans stop working or low speed operating	Ask for help, power on the unit, check the fan whether the voltage is normal or not. If the voltage is normal, the fan may be damaged
	Evaporator ice up	Turn OFF the unit for one hour, in some cases leave the door open, ice on evaporator will melt. Turn ON and check again
	Door is not fully closed	Check the door lock, shelves, or other objects to make sure door if fully closed Check the sealing rubber, make sure the door is fully sealed Check the door hinges, make sure they are not loose
	Condenser is dusty	Wash and clean the condenser
	Cooling system faulty (Gas leakage or blockage)	Ask for help
Compressor start and stop frequently	The door gasket does not seal properly	Use hair dryer to blow hot air and make the door seal smooth
	The sensor connection is wrong	Check the connection according to the wiring diagram and make the correct connection of the sensor
	The sensor is faulty	Replace with a new sensor
	The door is opened too often	Reduce the times / frequency of door opening
The light does not work	Not plugged in, or the light button is “OFF”. The light itself may be faulty	Check and make sure the light button is ON, or ask for help
The kegerator is making too much noise	The feet are not leveled	Adjust the feet and assure they are leveled
	Pipe hits other objects	Adjust the position of the pipe accordingly
	During compressor start or shut down, it is normal for noise from the vibration generated by the internal moving parts due to inertial motion	Nothing is necessary
	The rattling noise may come from the flow of the refrigerator, which is normal. As each cycle ends, you may hear gurgling sounds	Nothing is necessary
The door will not close properly	Door may be blocked by the door lock, shelves, or other objects	Remove the barrier
	Door sealing rubber is deformed	Repair or replace the rubber seal
	Door hinges are not loose	Adjust and fasten the hinges
Ice up	Outlet / suction outlet blockage	Remove the barrier
	Fans stop working or low speed operating	Ask for help, power on the appliance, check the fan whether the voltage is normal or not. If the voltage is normal, the fan may be damaged
	The door gasket does not seal properly; or door is opened too often	Use hair dryer to blow hot air and make the door seal smooth
	Gas leakage or cooling system blockage	Ask for help
External cabinet feels hot	Ambient temperature is too high or direct sunlight	Using conditions need to be improved
	Front grill outlet / suction outlet blockage	Remove the barrier
	Fans stop working or low speed operating	Ask for help, power on the appliance, check the fan whether the voltage is normal or not. If the voltage is normal, the fan may be damaged
Water drops on the door	Ambient humidity is high	Use a soft cloth to clean the water
	Door is opened too often	Reduce the times / frequency of door opening
	The door gasket does not seal properly	Use hair dryer to blow hot air and make the door seal smooth

Technical Specifications

Storage Capacity	One (1) 7.75 Gallon Quarter Slim Keg or One (1) 5 Gallon Commercial or Homebrew Keg
Dimensions	34” H x 15” W x 23 5/8” D (25 1/2” w/ handle)
Weight	70.55 lbs. (empty)
Voltage / Frequency	115v / 60Hz
Running Amps	0.9A
Operating Temperature	32°F - 64°F
Ambient Temperature	32°F - 100°F

Warranty Information

WHAT IS COVERED LIMITED ONE-YEAR WARRANTY:

For one year from the date of purchase by the original owner, Kegco will, at its option, repair or replace any part of the unit, which proves to be defective in material or workmanship under normal use. During this period Kegco will provide all parts and labor necessary to correct such defects free of charge, so long as the unit has been installed and operated in accordance with the written instructions in this manual. Kegco will provide you with a reasonably similar replacement product that is either new or factory refurbished.

LIMITED SECOND THROUGH FIFTH YEAR WARRANTY:

For the second through the fifth year from date of original purchase, Kegco Products will provide a replacement compressor free of charge due to a failure. You are responsible for the service labor and freight charges.

WHAT IS NOT COVERED:

- Content losses of food or other, due to spoilage.
- Incidental or consequential damages.
- Parts and labor costs for the following will not be considered as warranty:
    - Door springs, and/or frames.
    - Inner door panels, door rails and/or door supports.
    - Light bulbs and/or plastic housing.
    - Plastic cabinet liners.
    - Punctured evaporator that voids the warranty on the complete sealed system.
    - Repairs performed by unauthorized servicers.
    - Shipping and handling costs associated with the replacement of the unit.
    - Service calls that do not involve defects in material or workmanship such as customer education, door reversal, or proper installation.
    - Surcharges including, but not limited to, any after hour, weekend, or holiday service calls, tolls, ferry trip charges, or mileage expense for service call to remote areas, including the State of Alaska.
    - Service calls that are related to external problems, such as abuse, misuse, inadequate electrical power, accidents, fire, floods, or acts of God.
    - Replacement of house fuses or resetting circuit breakers.
- Failure of the product if it is used for other than its intended purpose.
- This warranty does not apply outside the Continental USA.

SERVICE FOR YOUR REFRIGERATOR:
With the purchase of your Kegco appliance, you can have the confidence that if you ever need additional information or assistance, the Kegco Customer Service team will be here for you. Whatever your questions are about our products, help is available. Just call us toll-free.

KEGCO PRODUCT CUSTOMER SERVICES:
Product Information, Part Orders and In-Home Repair Service: **888-980-4810**