ASSEMBLY INSTRUCTION



Parts List:

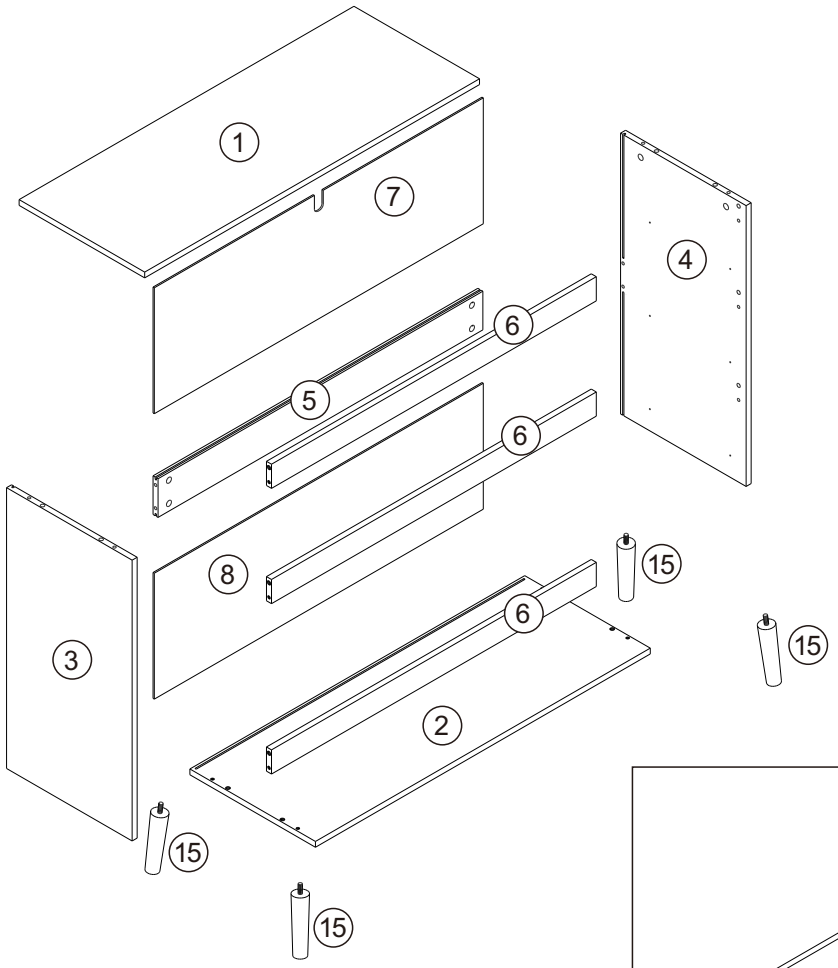

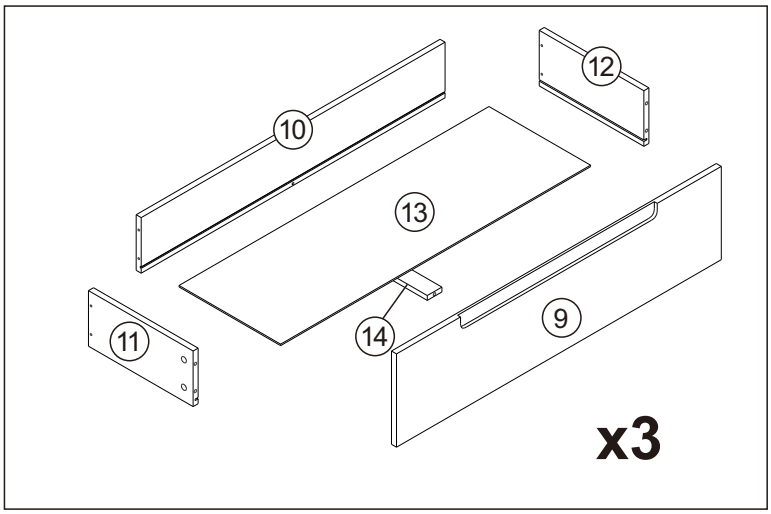

Hardware List:

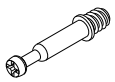 Ax29	 Bx29	 Cx14	 M4x35mm Dx19	 M3x12mm Ex24	 M4x12mm Fx21
 Gx8	 Hx4	 Ix1	 Jx3	 Kx1	 Lx4

1

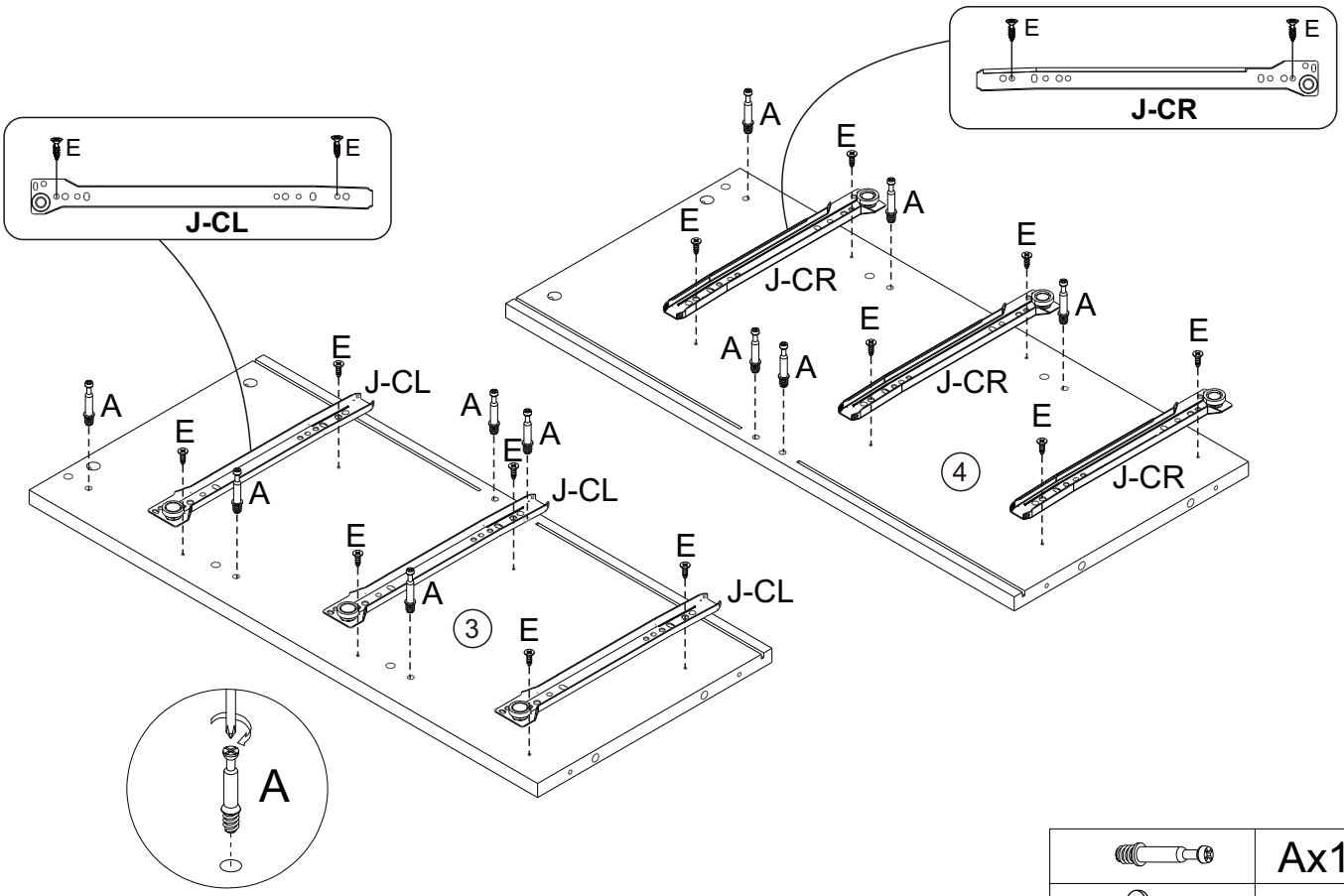

	Ax10
	Ex12
	Jx3

2

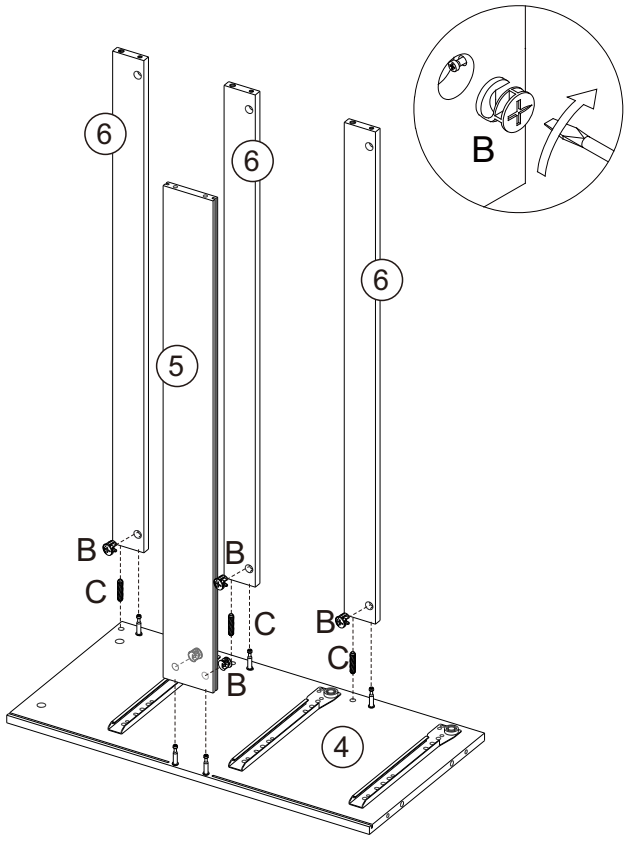

	Bx5
	Cx3

3

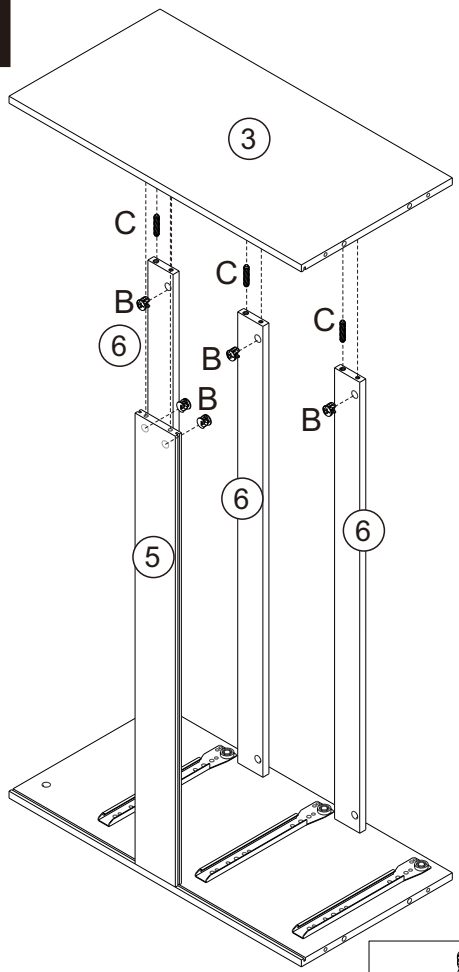

	Bx5
	Cx3

3

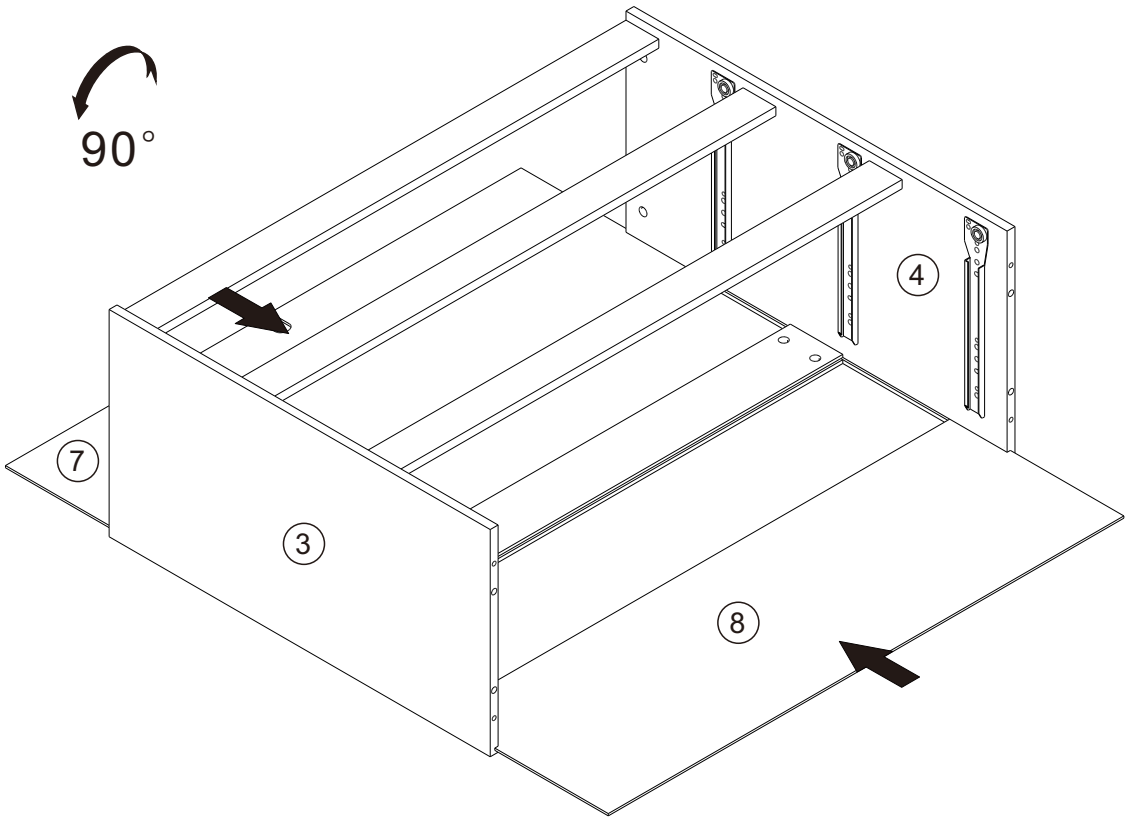

4

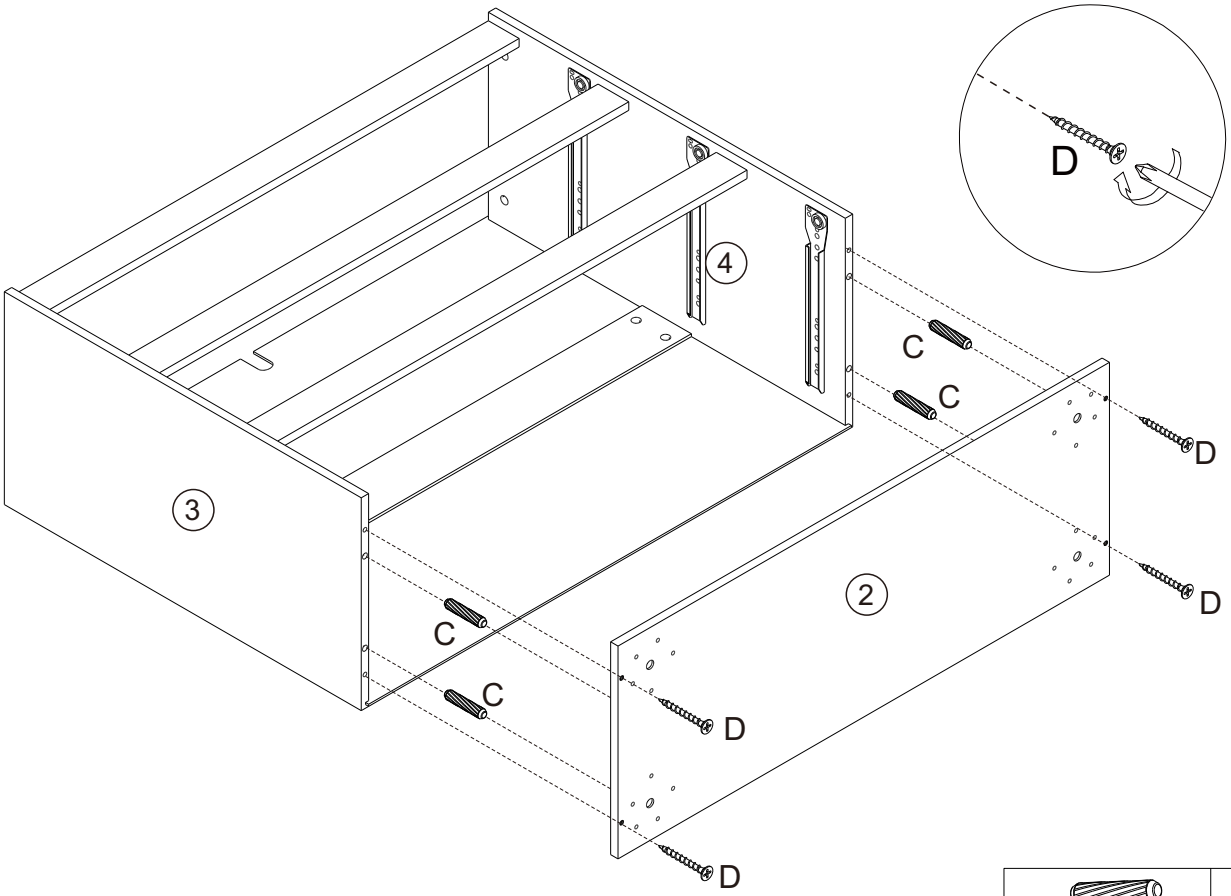

	Cx4
	Dx4

5

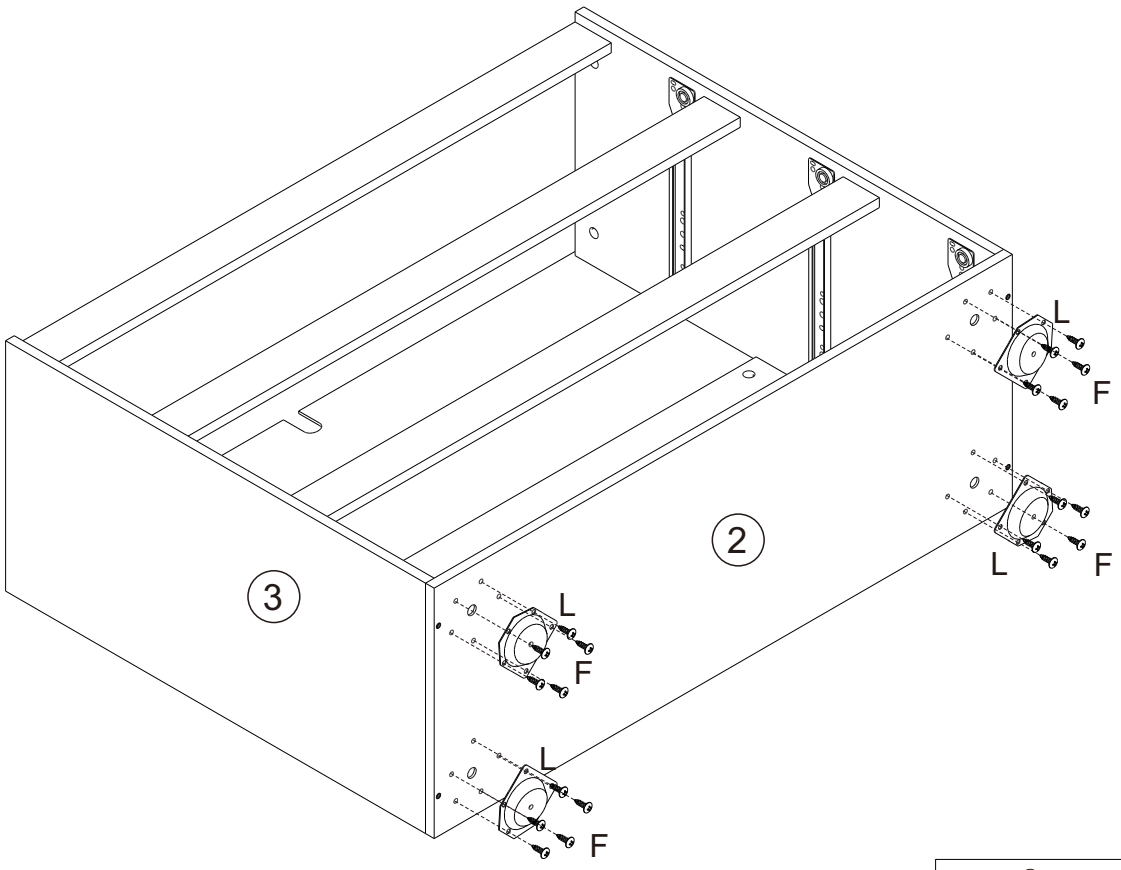

	Fx20
	Lx4

6

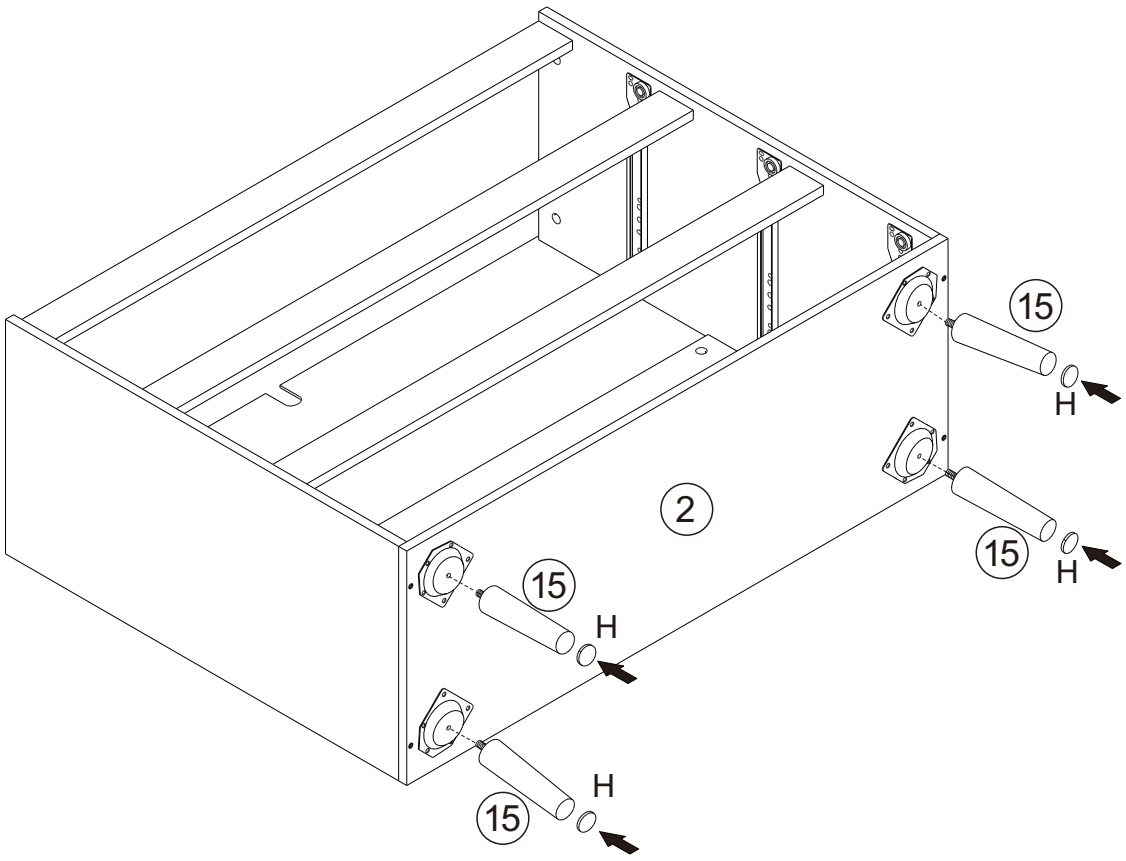

	Hx4

7

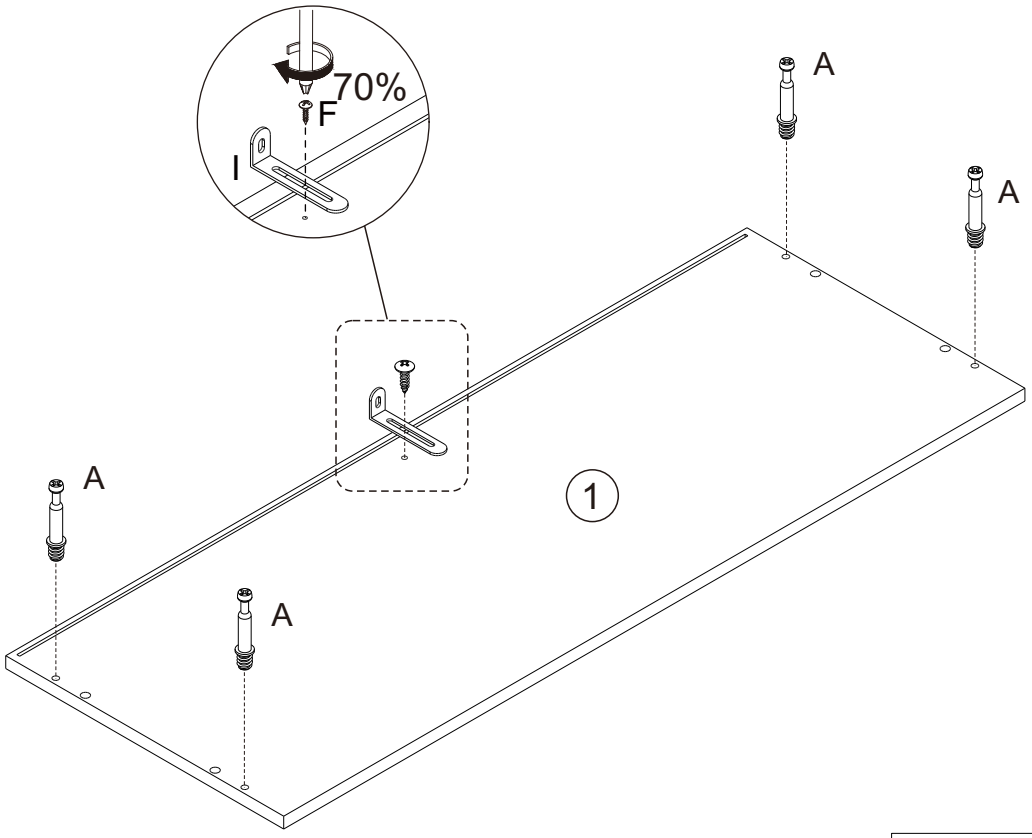

	Ax4
	Ix1
	Fx1

8

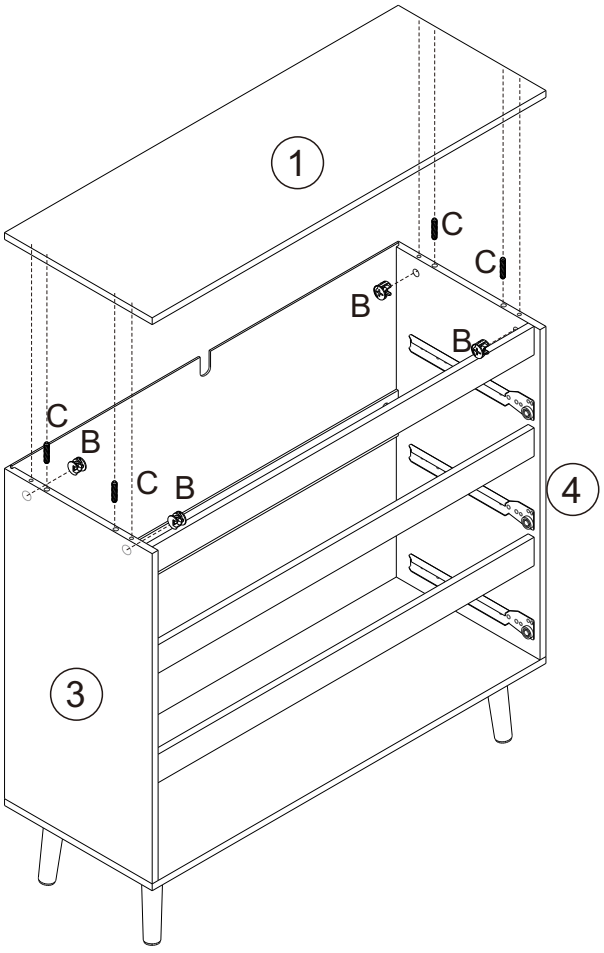

	Bx4
	Cx4

9

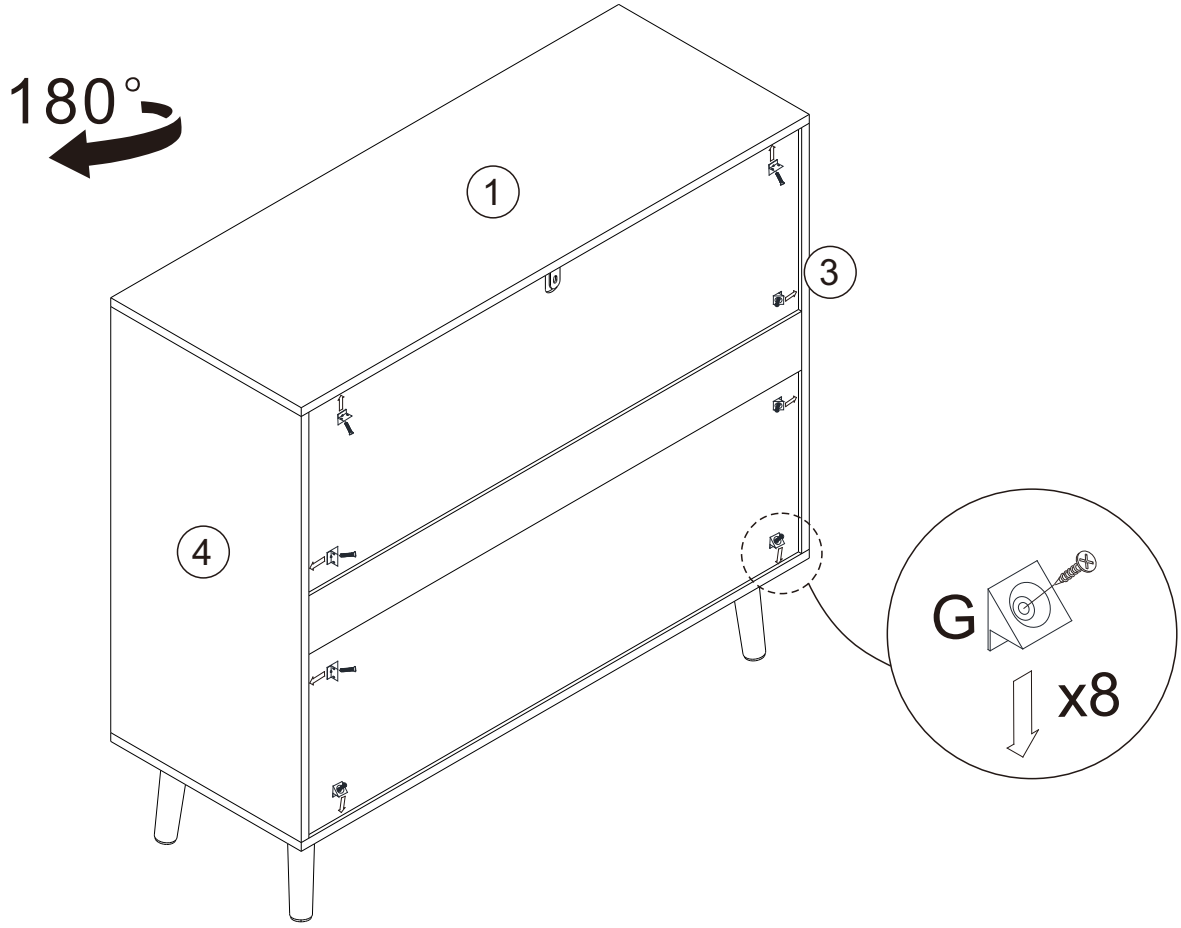

	Gx8

10

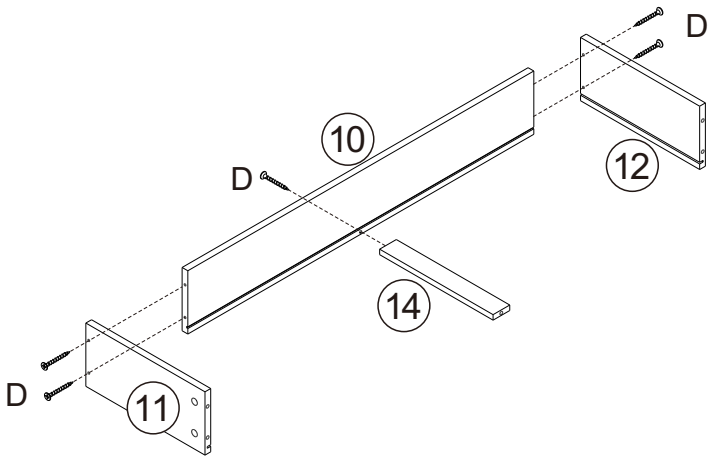

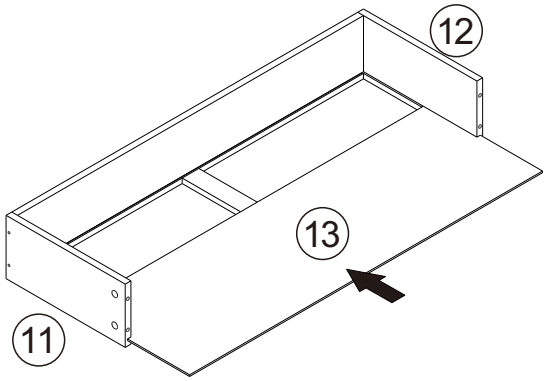

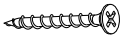	Dx15

X3

11

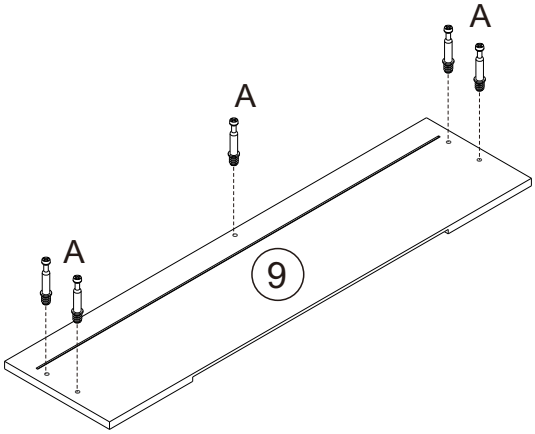

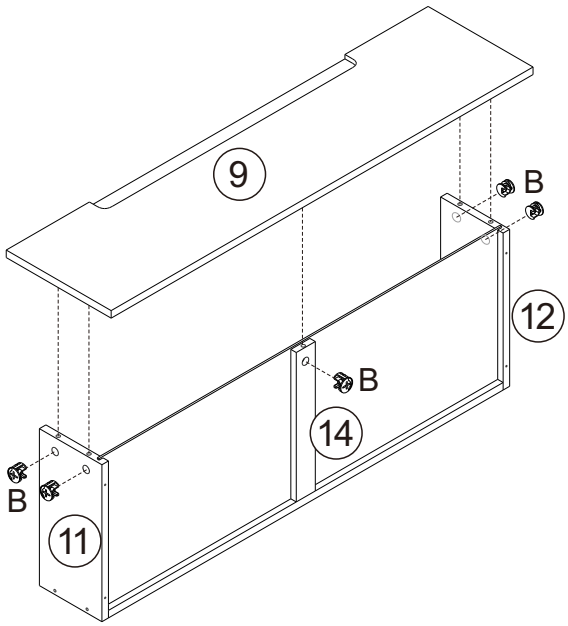

	Bx15
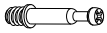	Ax15

X3

12

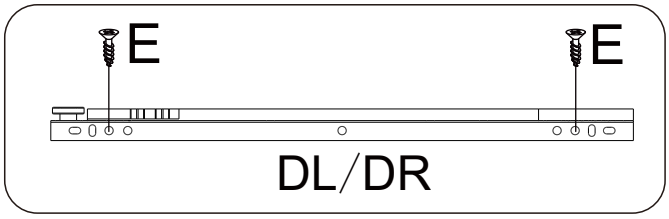

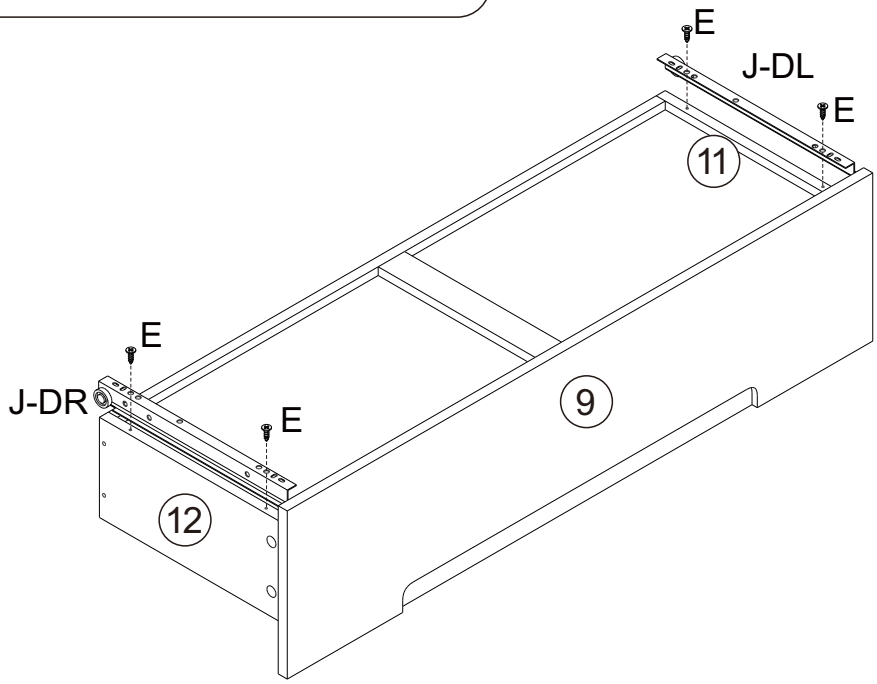

	Ex12
	Jx3

X3

13

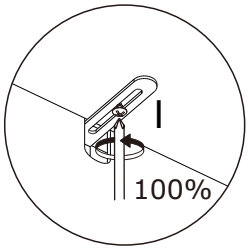

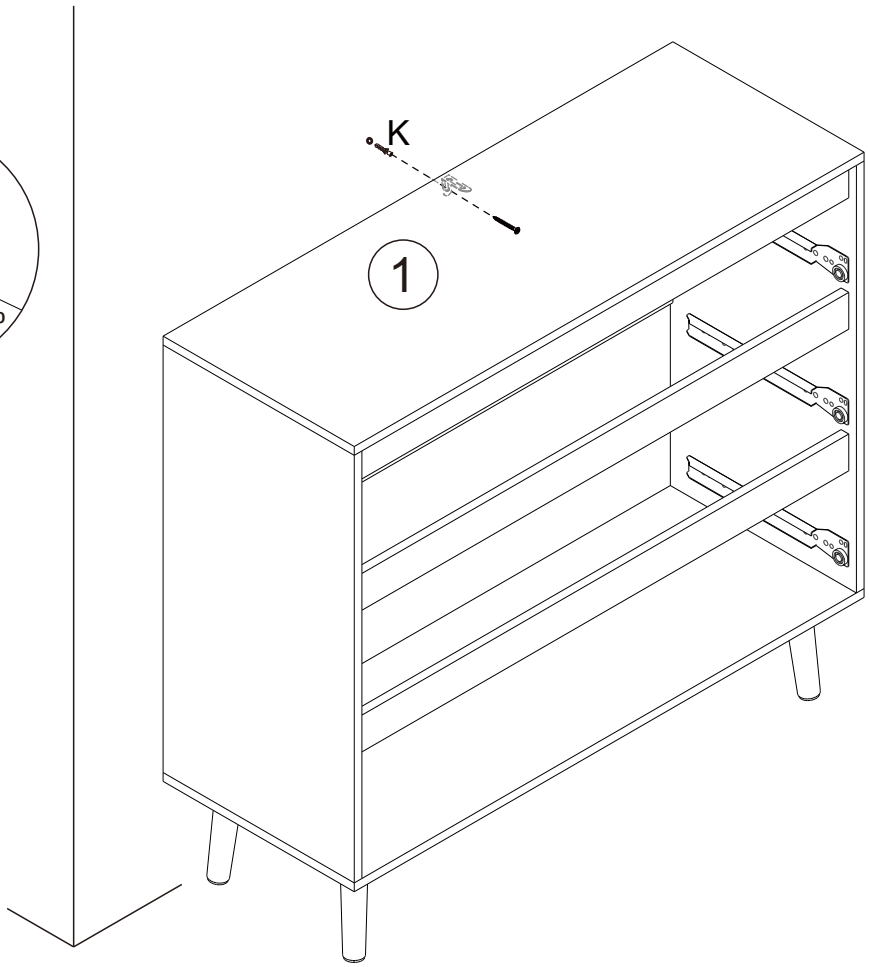

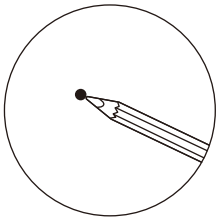

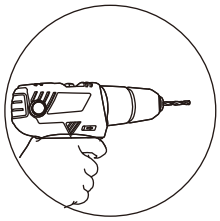

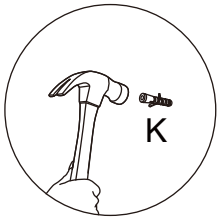



Kx1

14

